

AS SAFE AS EVER – FASTER THAN EVER BEFORE

As a leading supplier of electrical equipment for hazardous areas, R. STAHL offers state-of-the-art components and solutions, perfectly matched to the variety of operating conditions within your company. With its high level of reliability and quality, R. STAHL ensures your safety when it comes to explosion protection.

From now on, R. STAHL's **core programme** provides you with selected items for typical applications. The core programme is an electronic catalogue (e-catalogue) and comprises products from the areas **automation, installation material, luminaires, low-voltage devices,** as well as **HMIs** and **cameras**.

*R. STAHL ships standard quantities of the items marked with an orange triangle ▲ directly from the warehouse within 7 days. Subject to availability, R. STAHL ships all the other items as quickly as possible. You can find the expected delivery date on the corresponding quotation or order confirmation.

The items in our core programme are designed to help you to implement your time-critical projects quickly and safely. To fulfil your **requests and orders in good time**, the new e-catalogue includes an **integrated basket**. This allows you to search by item number, put your basket together directly in the catalogue, and send off your basket as a request or order.



- REQUEST AND ORDER AROUND THE CLOCK: 24/7, 365 DAYS A YEAR
- DISPATCH WITHIN 7 DAYS*
- TYPICAL STANDARD VERSIONS AVAILABLE
- TRIED-AND-TESTED R. STAHL QUALITY
- HOTLINE SUPPORT

You can find our entire range in the following pages.

CORE PROGRAMME 2021
valid as of January 2021

0 **General** **4**

Delivery and Service Conditions, Publication Details | E-Catalogue

A2 **Safety Barriers** **8**

Applications | Single-Channel Safety Barriers | Dual-Channel Safety Barriers

A3 **Isolators** **16**

General | Ex i-Isolators – Analog Input | Ex i-Isolators – Analog Output | Ex i-Isolators – Digital Input | Ex i-Isolators – Digital Output | Ex i-Isolators – Temperature Input | System Components

A4 **Remote I/O** **66**

General | CPU & Power Modules | Analog Modules | Digital Input Output Modules | Digital Output Modules | Temperature Input Modules | System Components and Accessories | Enclosures for Fieldstations

A5 **Network Technology** **136**

General Network Technology | HFisolator | Coax Bushing | Media Converter | Isolating Repeater for Profibus / Modbus RTU | Connection Technology for Data Networks

A6 **Ex p Control Panels** **158**

Ex p Control Panels

A7 **Grounding Monitoring Devices and Systems** **168**

General | Grounding Monitoring Devices and Systems

A8 **Operating and Monitoring Systems** **180**

HMI Technologies for All Applications | HMI Device Platforms | Box PC | Remote HMI Software

A9 **Cameras and CCTV Equipment** **198**

Camera and Video Systems | Colour Camera

E2 **Lighting** 204
Linear Luminaire with LED | Linear Luminaire for Fluorescent Lamps | Compact Light Fittings | Tubular Light Fittings | Pendant Light Fittings

E3 **Installation Equipment** 246
Installation Switch | Junction Boxes | Terminal Boxes | Empty Enclosures / Ex d Cabinets | Plugs and Sockets

E4 **Control Devices** 336
Position Switch | Control Devices for Panel Mounting | Control Equipment for Surface Mounting | Motion Sensor

E7 **Load Disconnect Switches and Motor Starters** 386
Safety Switches | Motor Protection Circuit Breakers

E9 **Components for System Solutions** 402
Ex d Technology Flameproof Enclosure Ex d Enclosures

E10 **Installation Equipment and Accessories** 406
Cable Glands with Strain Relief Ex e | Cable Glands Ex e | Cable Glands for Unarmoured Cable | Cable Glands for all Armouring | Reducers, Adaptors, Enlargements | Stopping Plugs | Breather | Accessories

0

E-CATALOGUE WITH ONLINE ORDER FUNCTION

The explicit navigation system in our e-catalogue guides the user to the information they need via the table of contents. This means you can use our e-catalogue to quickly find the right products for you. Add your product selections to the basket and choose either "Request" or "Order" to dispatch your basket. You will receive a digital copy of your request or order data within 2 working days.

You can contact us using our hotline from Monday to Friday between 8 am and 5 pm by calling +31 74 2472 472.

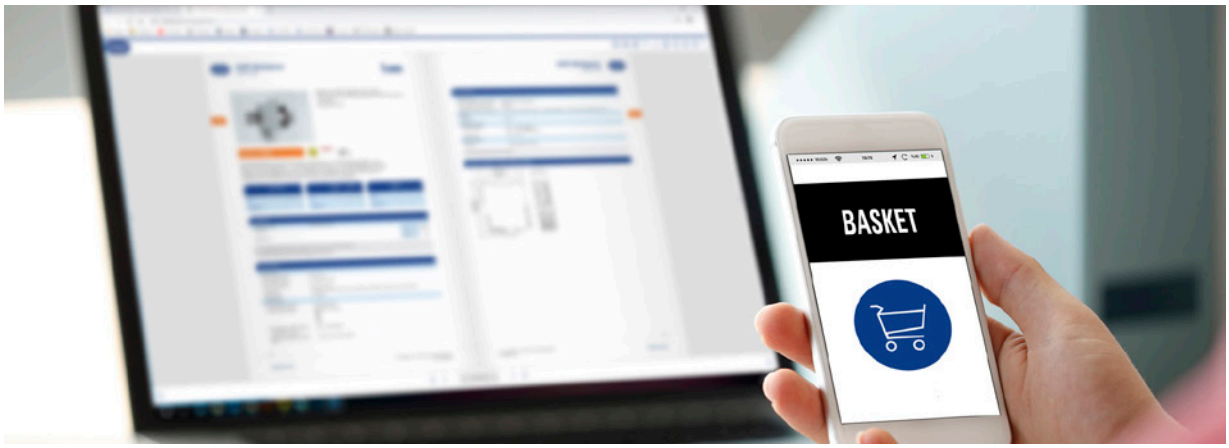

LINKS WITHIN THE CATALOGUE



You can click on the index mark in the table of contents to directly access the start of the chapter's contents. When you are within a chapter, you can click on the index mark to go to the start of the corresponding chapter.



Click on the page number in the table of contents to jump to the start of the corresponding chapter.



Clicking on the page number within the chapter will take you directly to the corresponding page.



For references within the e-catalogue, you can also click on the page number to jump to the corresponding page.



Jump back to the table of contents by clicking on the R. STAHL logo. This is included on almost every page.

INTEGRATED BASKET

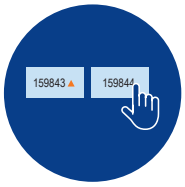

Click on the item number to place the product into your basket.



Click on the basket to view its contents.

ADDITIONAL HIGHLIGHTS FROM OUR E-CATALOGUE



You can display an overview of the catalogue pages in the margin at any time – and jump directly to the required page.

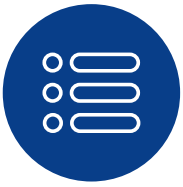

The table of contents is also displayed on the right-hand side once you have clicked on the corresponding button. This is how you can directly access the content you need within the e-catalogue.



Add bookmarks or notes.



Do you want to find more information about a product quickly and easily? It doesn't get any easier than this! Click on the WebCode – this will take you to the online download area for the corresponding product.



Search directly for the content you need.

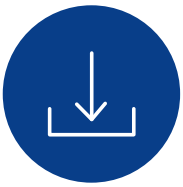

Save specific pages or the entire e-catalogue with ease.



Print out individual pages.



Share different pages with your colleagues via e-mail or social media, for example.

0

DELIVERY AND SERVICE CONDITIONS

Delivery and Service Conditions

For use by Enterprises, Legal Entities according to public law and special funds under public law only:
R. STAHL markets the contractual products and/or services and works offered in the online shop exclusively to enterprises, legal entities according to public law and special funds under public law ("Customer"). R. STAHL does not market contractual products and/or services and works to consumers, i.e. natural person who concludes transactions for purposes that primarily cannot be attributed to their commercial or independent professional activity ("Consumer").

Sales and deliveries of the contractual products and the rending of services and works by R. STAHL on the basis of orders from the Customer via the online is exclusively subject to and in accordance with the provisions of the R. STAHL's general terms of sale and delivery, which can be found and downloaded at r-stahl.com/en/global/support/customer-service/

By placing an order via the online shop, the Customer acknowledges and accepts the sole validity and applicability of the R. STAHL's terms and conditions of Delivery and Service 10/2020 and confirms not be a consumer according to the above definition.

Prices:
All prices are quoted in Euros. The quoted prices are Ex Works and exclusive of any applicable value added tax (VAT). The price for packaging will be calculated at cost price. Payment must be made within 30 days from date of the invoice.

Minimum/maximum order value:
For orders with a net order value of less than €200, R. STAHL will charge a minimum order value surcharge of €30 (thirty euros) net. If the net value of an order exceeds €2.000, please contact our hotline directly.

Further conditions:
R. STAHL reserves the right to change the prices, dimensions, weights, designs and delivery options of any product and/or services and works.

Returns:
Upon prior agreement, Products may be returned up to three (3) months after delivery. The Customer will receive a credit note for the value of the goods once the products have been freight-free delivered in the original packaging and such goods have been inspected by R. STAHL.

Publication Details

PUBLISHER

R. STAHL Schaltgeräte GmbH
Am Bahnhof 30
74638 Waldenburg
Germany

T +49 7942 9430-0
F +49 7942 943-4333
E info@r-stahl.com

Headquarters: Waldenburg
Court of Registration: Stuttgart HRB 581015
VAT No.: DE 146278394
Tax No.: 76001/11261
WEEE-Reg.-No. (R. STAHL Schaltgeräte GmbH): 52376448
WEEE-Reg.-No. (R. STAHL HMI Systems GmbH): 15180083

Management:
Bernardo Kral, Ömer Öztürk

Chairman of the Supervisory Board:
Dr. Mathias Hallmann

Responsible for content as per Section 55 (2) of the German Interstate Broadcasting Agreement (RStV):
Dr. Thomas Niessen

Our hotline:

Monday – Friday:	8 am to 5 pm
Telephone:	+31 74 2472 472


EX AUTOMATION?
IT'S WHAT WE DO.
THE STRONGEST LINK.
STAHL
DIGITALISATION BY THE EXPERTS.
Certified for all continents, designed for all branches of industry and engineered to meet your exact requirements: R. STAHL offers state-of-the-art process automation and digitalisation technology for hazardous areas, made with the same high standards of safety, quality and precision that have made us a market leader in the hazardous areas sector.
Find out more: r-stahl.com/en/stahl4automation

SAFETY BARRIERS

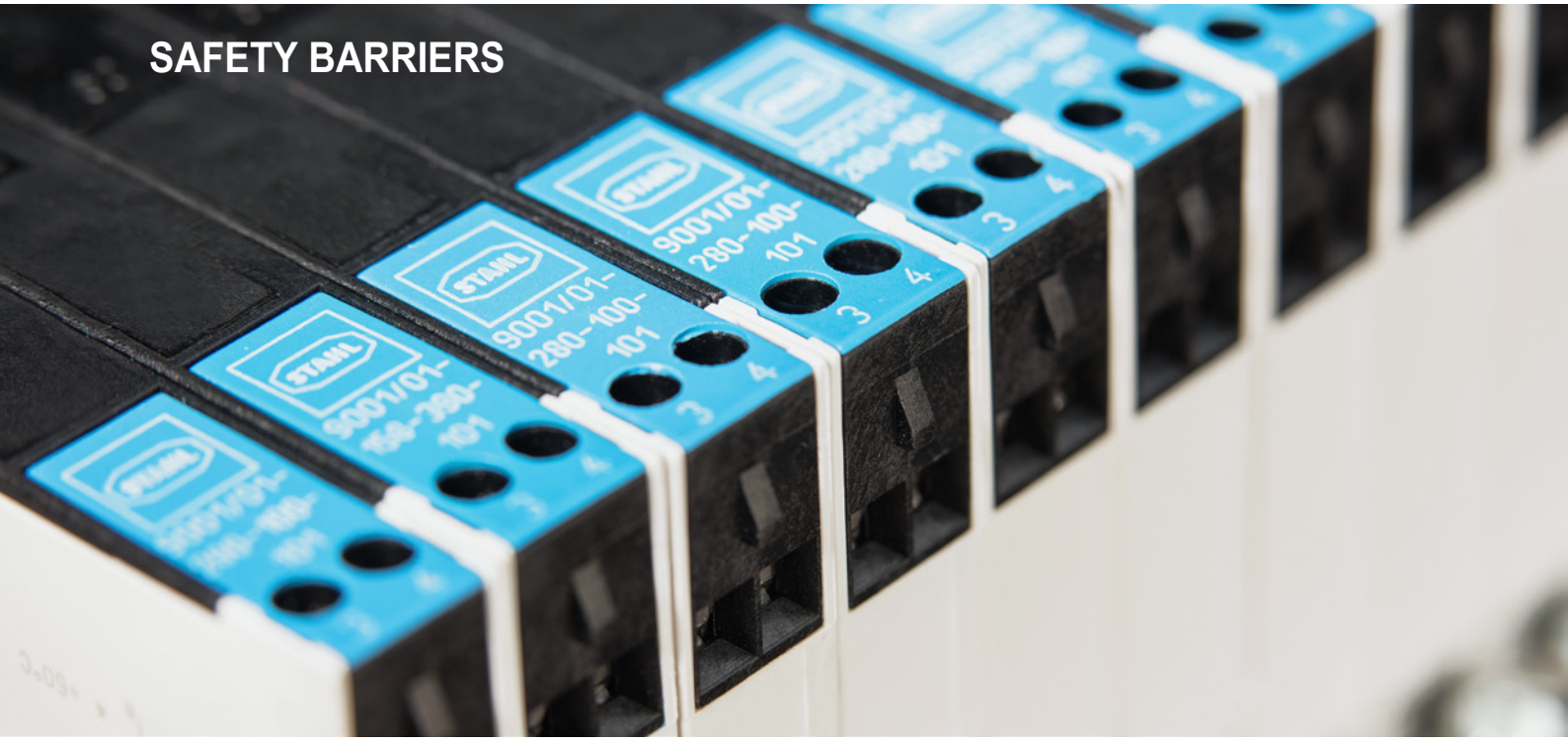

Product	Installation in Zone						Series	Page	WebCode
	0	1	2	20	21	22			
Applications									
Safety Barriers								9	
Dual-Channel Safety Barriers									
Dual-Channel Safety Barriers			•				9002	13	9002A
Single-Channel Safety Barriers									
Single-Channel Safety Barriers			•				9001	10	9001A

For additional products and information please refer to r-stahl.com

Overview Typical Applications

Symbol	Application	INTRINSPAK Type
	**2-wire transmitter HART**	9002/13-280-110-001 9001/51-280-091-141
	**i/p converter, control valve, indicator** Field circuit grounded	9001/01-280-110-101 9002/13-280-110-001
	**Contact, optocoupler output** Switch (load grounded) field circuit grounded	9001/01-252-060-141
	**Solenoid valve, LED indicator** Field circuit grounded Field circuit floating	9002/13-280-093-001 9001/03 9001/01
	**Thermocouple, mV signals** Field circuit floating	9002/77-093-300-001
	**Resistance thermometer (RTD), Potentiometer** Pt100, 2-wire connection field circuit floating	9002/22-032-300-111
	**Strain gauge load cells** 350 Ω or 700 Ω 6-wire ± 7.5 V (15 V) Field circuit floating 350 Ω 6-wire + 10 V field circuit floating 350 Ω or 700 Ω 6-wire + 16 V field circuit floating	 9002/10-187-270-001 9002/10-187-020-001 9002/77-093-040-001 9002/11-130-360-001 9002/11-120-024-001 9002/11-120-024-001 9002/13-199-225-001 9002/11-199-030-001 9002/11-199-030-001
	**Fire & gas detection**	9002/01-280-165-101
	**Intrinsically safe data interface RS 232**	9002/22-240-160-001

Single-Channel Safety Barriers
Series 9001



- For the intrinsically safe operation of a wide range of devices, such as HART transmitters, solenoid valves, sensors, contacts and many more
- Compact, space-saving devices that are easy to install on a DIN rail
- Quick and efficient installation as barriers can be simultaneously snapped onto DIN rail and connected to ground (ISA - RPI12.06)
- Convenient maintenance and repair through back-up fuse feature

WebCode 9001A

The 9001 series INTRINSPAK single-channel zener barriers enable the intrinsically safe operation of virtually all field devices. The comprehensive portfolio and the combination of zener barriers cover a wide variety of signals. The devices are incredibly robust and require little space. The back-up fuse is a convenient feature as it is standardized for all variants.

	IECEx / ATEX					
Zone	0	1	2	20	21	22
Ex interface	•	•	•	•	•	•
Installation in			•			

	NEC 500 / CEC Appendix J					
	Class I		Class II		Class III	
Division	1	2	1	2	1	2
Ex interface	•	•	•	•	•	•
Installation in		•				

	CEC Section 18					
	NEC® 505			NEC® 506		
	Class I					
Zone	0	1	2	20	21	22
Ex interface	•	•	•			
Installation in			•			

Selection Table

Product variant	Series 9001/00, Single-channel safety barriers for negative polarity							
Nominal voltage	Minimum resistance R_{min}	Maximum resistance R_{max}	Maximum voltage U_o	Maximum current I_o	Maximum power P_o	Product Type	Art. No.	Listprice €	PS
24 V	287 Ω	320 Ω	28 V	100 mA	700 mW	9001/00-280-100-101	158356▲	83.60	20
Product variant	Series 9001/01, Single-channel safety barriers for positive polarity							
Nominal voltage	Minimum resistance R_{min}	Maximum resistance R_{max}	Maximum voltage U_o	Maximum current I_o	Maximum power P_o	Product Type	Art. No.	Listprice €	PS
6 V	65 Ω	73 Ω	8.6 V	150 mA	322.5 mW	9001/01-086-150-101	158418▲	77.00	20
12 V	120 Ω	135 Ω	15.8 V	150 mA	593 mW	9001/01-158-150-101	158535▲	77.00	20
16 V	216 Ω	241 Ω	19.9 V	100 mA	498 mW	9001/01-199-100-101	158632▲	84.50	20
20 ... 35 V	259 Ω	268 Ω	25.2 V	100 mA	630 mW	9001/01-252-100-141	158697▲	92.80	20
	455 Ω	506 Ω	25.2 V	60 mA	378 mW	9001/01-252-060-141	158693▲	100.00	20
24 V	177 Ω	198 Ω	28 V	165 mA	1155 mW	9001/01-280-165-101	158392▲	84.50	20
	263 Ω	294 Ω	28 V	110 mA	770 mW	9001/01-280-110-101	158380▲	83.60	20
	287 Ω	320 Ω	28 V	100 mA	700 mW	9001/01-280-100-101	158365▲	82.20	20
	340 Ω	375 Ω	28 V	85 mA	595 mW	9001/01-280-085-101	158351▲	82.20	20

▲ Preferred products – in stock or available at short notice

Selection Table

Product variant									
Series 9001/02, Single-channel safety barriers for alternating polarity									
Nominal voltage	Minimum resistance R_{min}	Maximum resistance R_{max}	Maximum voltage U_o	Maximum current I_o	Maximum power P_o	Product Type	Art. No.	Listprice €	PS
± 0.7 V	19.9 Ω	20.1 Ω	1.6 V	150 mA	60 mW	9001/02-016-150-111	158685 ▲	96.20	20
± 6 V	31 Ω	36 Ω	9.3 V	390 mA	906.8 mW	9001/02-093-390-101	158755 ▲	92.80	20
	319 Ω	355 Ω	9.3 V	30 mA	69.8 mW	9001/02-093-030-101	158743 ▲	92.80	20
Product variant									
Series 9001/51, Single-channel safety barriers for transmitter									
Nominal voltage	Minimum resistance R_{min}	Maximum resistance R_{max}	Maximum voltage U_o	Maximum current I_o	Maximum power P_o	Product Type	Art. No.	Listprice €	PS
20 ... 35 V	–	–	28 V	91 mA	637 mW	9001/51-280-091-141	158524 ▲	156.40	20
	–	–	28 V	110 mA	770 mW	9001/51-280-110-141	158530 ▲	159.40	20

Schematics of the safety barriers on the Internet r-stahl.com

Technical Data

Explosion Protection	
IECEx gas explosion protection	Ex nA [ia Ga] IIC/IIB T4 Gc
IECEx dust explosion protection	[Ex ia Da] IIIC
ATEX gas explosion protection	Ⓔx II 3 (1) G Ex nA [ia Ga] IIC/IIB T4 Gc
ATEX dust explosion protection	Ⓔx II (1) D [Ex ia Da] IIIC
EAC gas explosion protection	2 Ex nA [ia Ga] IIC T4 Gc X
EAC dust explosion protection	[Ex ia Da] IIIC
Certificates	ATEX (PTB), Brazil (ULB), Canada (CSA), EAC (STV), IECEx (PTB), Japan (CML), Korea (KGS), USA (FM), USA (UL)
Notes	CCC certificate available from 2021 onward
Installation	in Zone 2, Division 2 and in safe area
Further information	see respective certificate and operating instructions
Ambient Conditions	
Ambient temperature	-20 °C ... +60 °C
Storage temperature	-20 °C ... +75 °C
Mechanical Data	
Degree of protection (IP)	IP40
Degree of protection note	according to IEC 60529
Terminal degree of protection (IP)	IP20
Enclosure material	Polyamide 6GF
Number of connection terminals	4
Connection cross section max.	1.5 mm²
Type of connection cable	Finely stranded Solid
Weight	0.11 kg

▲ Preferred products – in stock or available at short notice

A2

Dimensional Drawings (All Dimensions in mm [inches]) – Subject to Alterations

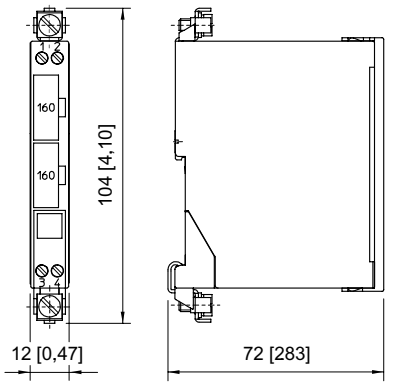

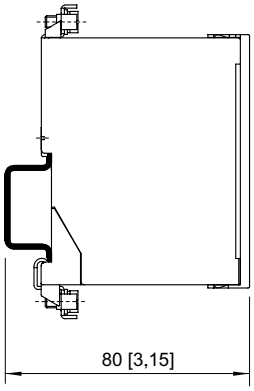

Mounting on DIN rail NS 35/15

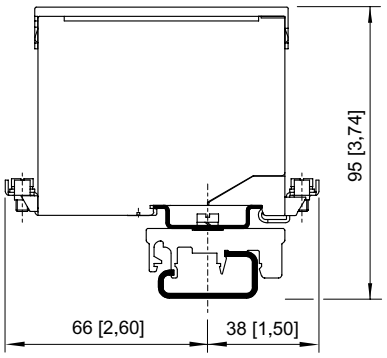

Mounting on DIN rail NS 32 by means of adaptor and mounting attachment, moulded plastic

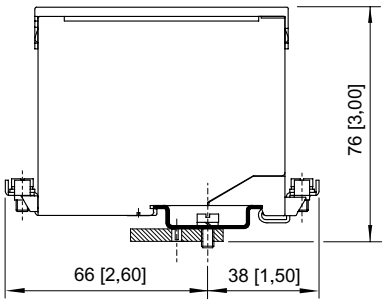

Mounting on mounting plate by means of adaptor



- For the intrinsically safe operation of a wide range of devices, such as HART transmitters, solenoid valves, sensors, zero-potential contacts and many more
- Compact, space-saving devices that are easy to install on a DIN rail
- Quick and efficient installation as barriers can be simultaneously snapped onto DIN rail and connected to ground (ISA - RPI12.06)

WebCode **9002A**

The 9002 series INTRINSPAK two-channel zener barriers enable the intrinsically safe operation of virtually all field devices. The comprehensive portfolio and the combination of zener barriers cover a wide variety of signals. The devices are incredibly robust and require very little space. The back-up fuse is a convenient feature as it is standardized for all variants.

	IECEx / ATEX					
Zone	0	1	2	20	21	22
Ex interface	•	•	•	•	•	•
Installation in			•			

	NEC 500 CEC Appendix J					
	Class I		Class II		Class III	
Division	1	2	1	2	1	2
Ex interface	•	•	•	•	•	•
Installation in		•				

	CEC Section 18 NEC® 505			NEC® 506		
	Class I					
Zone	0	1	2	20	21	22
Ex interface	•	•	•			
Installation in			•			

Selection Table

Channel	Nominal voltage U_N	Minimum resistance R_{min}	Maximum resistance R_{max}	Maximum voltage U_o	Maximum current I_o	Maximum power P_o	Product Type	Art. No.	Listprice €	PS
Product variant			Series 9002/10, Potential: positive / negative							
1 2 1 + 2	6 V 6 V	490 Ω 490 Ω	543 Ω 543 Ω	9.3 V 9.3 V 18.7 V	20 mA 20 mA 20 mA	50 mW 50 mW 90 mW	9002/10-187-020-001	158937▲	124.70	20
1 2 1 + 2	6 V 6 V	43 Ω 43 Ω	49 Ω 49 Ω	9.3 V 9.3 V 18.7 V	270 mA 270 mA 270 mA	630 mW 630 mW 1260 mW	9002/10-187-270-001	158933▲	124.70	20
Product variant			Series 9002/11; Potential: positive / positive							
Channel	Nominal voltage U_N	Minimum resistance R_{min}	Maximum resistance R_{max}	Maximum voltage U_o	Maximum current I_o	Maximum power P_o	Product Type	Art. No.	Listprice €	PS
1 2 1 + 2	16 V 16 V	1435 Ω 1435 Ω	1590 Ω 1590 Ω	19.9 V 19.9 V 19.9 V	15 mA 15 mA 30 mA	75 mW 75 mW 150 mW	9002/11-199-030-001	158929▲	124.70	20
1 2 1 + 2	25 V 25 V	322 Ω 322 Ω	359 Ω 359 Ω	28 V 28 V 28 V	93 mA 93 mA 186 mA	650 mW 650 mW 1300 mW	9002/11-280-186-001	158848▲	110.10	20
Product variant			Series 9002/13, Safety barriere potential: positive / diode return barrier potential: positive							
Channel	Nominal voltage U_N	Minimum resistance R_{min}	Maximum resistance R_{max}	Maximum voltage U_o	Maximum current I_o	Maximum power P_o	Product Type	Art. No.	Listprice €	PS
1 2 1 + 2	16 V 16 V	96 Ω –	109 Ω –	19.9 V 19.9 V 19.9 V	222 mA 3 mA 225 mA	1100 mW 15 mW 1120 mW	9002/13-199-225-001	158921▲	127.30	20
1 2 1 + 2	20-35 V 22 V	217 Ω –	244 Ω –	25.2 V 25.2 V 25.2 V	118 mA 0 mA 121 mA	740 mW 20 mW 760 mW	9002/13-252-121-041	158830▲	129.60	20

A2

Selection Table

Channel	Nominal voltage U_N	Minimum resistance R_{min}	Maximum resistance R_{max}	Maximum voltage U_o	Maximum current I_o	Maximum power P_o	Product Type	Art. No.	Listprice €	PS
Product variant			**Series 9002/13, Safety barriere potential: positive / diode return barrier potential: positive**							
1 2 1 + 2	24 V 24 V	322 Ω –	359 Ω –	28 V 28 V 28 V	90 mA 3 mA 93 mA	630 mW 21 mW 651 mW	9002/13-280-093-001	158852▲	124.10	20
1 2 1 + 2	24 V 24 V	270 Ω –	296 Ω –	28 V 28 V 28 V	107 mA 3 mA 110 mA	749 mW 21 mW 770 mW	9002/13-280-110-001	158857▲	127.30	20
Product variant			**Series 9002/22, Potential: alternating / alternating**							
1 2 1 + 2	0.7 V 0.7 V 1.4 V	21.6 Ω 21.6 Ω	23.8 Ω 23.8 Ω	1.6 V 1.6 V 3.2 V	150 mA 150 mA 300 mA	60 mW 60 mW 120 mW	9002/22-032-300-111	158954▲	111.20	20
Product variant			**Series 9002/77, Star barrier / star barrier**							
1 2 1 + 2	– – 6 V	492 Ω 492 Ω –	546 Ω 546 Ω –	9.3 V 9.3 V 9.3 V	20 mA 20 mA 40 mA	50 mW 50 mW 90 mW	9002/77-093-040-001	158905▲	127.30	20
1 2 1 + 2	– – 6 V	71.7 Ω 71.7 Ω –	81.5 Ω 81.5 Ω –	9.3 V 9.3 V 9.3 V	150 mA 150 mA 300 mA	350 mW 350 mW 700 mW	9002/77-093-300-001	158897▲	113.90	20
1 2 1 + 2	– – 12 V	112 Ω 112 Ω –	126 Ω 126 Ω –	15 V 15 V 15 V	150 mA 150 mA 300 mA	560 mW 560 mW 1130 mW	9002/77-150-300-001	158889▲	114.90	20

Schematics of the safety barriers on the Internet r-stahl.com

Technical Data

Explosion Protection	
IECEx gas explosion protection	Ex nA [ia Ga] IIC/IIB T4 Gc
IECEx dust explosion protection	[Ex ia Da] IIIC
ATEX gas explosion protection	Ⓔx II 3 (1) G Ex nA [ia Ga] IIC/IIB T4 Gc
ATEX dust explosion protection	Ⓔx II (1) D [Ex ia Da] IIIC
EAC gas explosion protection	Ex 2 Ex nA [ia Ga] IIC T4 Gc X
EAC dust explosion protection	Ex [Ex ia Da] IIIC
Certificates	ATEX (PTB), Brazil (ULB), Canada (CSA), China (CQST), EAC (STV), IECEx (PTB), India (PESO), Japan (CML), Korea (KGS), USA (FM), USA (UL)
Further information	see respective certificate and operating instructions
Ambient Conditions	
Ambient temperature	-20 °C ... +60 °C
Storage temperature	-20 °C ... +75 °C
Mechanical Data	
Degree of protection (IP)	IP40
Terminal degree of protection (IP)	IP20
Enclosure material	Polyamide 6GF
Number of connection terminals	4
Connection cross section max.	1.5 mm²
Type of connection cable	Solid Finely stranded
Weight	0.11 kg

Dimensional Drawings (All Dimensions in mm [inches]) – Subject to Alterations

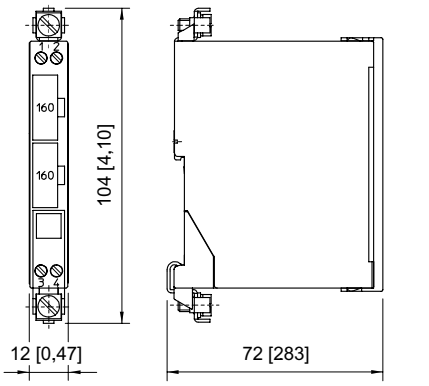

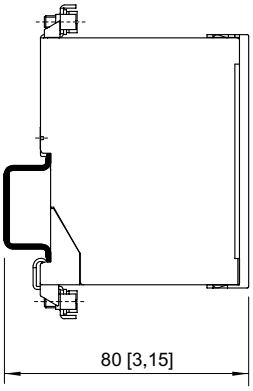

Mounting on DIN rail NS 35/15

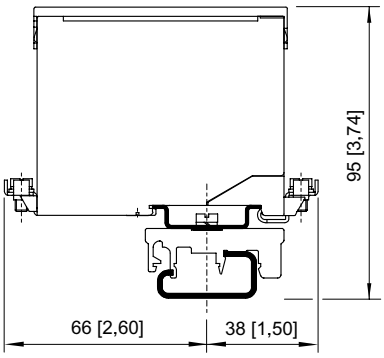

Mounting on DIN rail NS 32 by means of adaptor and mounting attachment, moulded plastic

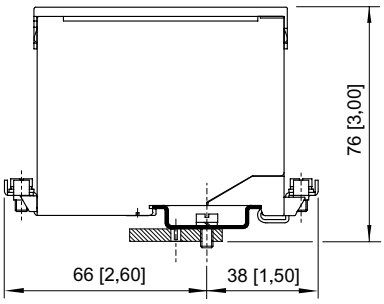

Mounting on mounting plate by means of adaptor

ISOLATORS



Product	Installation in Zone						Series	Page	WebCode
	0	1	2	20	21	22			
Ex i-Isolators – Analog Input									
Transmitter Supply Unit			•				9160	22	9160A
Transmitter Supply Unit Slim Design 12.5 mm Wide			•				9260	25	9260A
Transmitter Supply Unit with Limit Value			•				9162	28	9162A
Vibration Transducer Supply Unit			•				9147	20	9147A
Ex i-Isolators – Analog Output									
Isolating Repeater			•				9165	30	9165A
Isolating Repeater Slim Design 12.5 mm Wide			•				9265	32	9265A
Ex i-Isolators – Digital Input									
Switching Repeater			•				9170	34	9170A
Switching Repeater Slim Design 12.5 mm Wide			•				9270	36	9270A
Ex i-Isolators – Digital Output									
Binary Output			•				9175	40	9175A
Binary Output Slim Design 12.5 mm Wide			•				9275	42	9275A
Digital Output Loop Powered			•				9176	44	9176A
Digital Output Loop Powered Slim Design 12.5 mm Wide			•				9276	46	9276A
I.S. Relay Module			•				9172	38	9172A
Ex i-Isolators – Temperature Input									
Resistance Isolator			•				9180	48	9180A
Temperature Transmitter			•				9182	50	9182A
Temperature Transmitter Slim Design 12.5 mm Wide			•				9282	53	9282A
General									
Applications Isolators								19	
General								19	ISpacA
Overview Network Structure with Isolators								18	

Product	Installation in Zone						Series	Page	WebCode
	0	1	2	20	21	22			
System Components									
HART Multiplexer			•				9192	56	9192A
HART Termination Board			•				9196	64	9196A
pac-Bus			•				9194	60	9194A
pac-Bus Slim Design 12.5 mm Wide			•				9294	62	9294A
Supply Module			•				9193	58	9193A

For additional products and information please refer to r-stahl.com

Overview Network Structure with Isolators

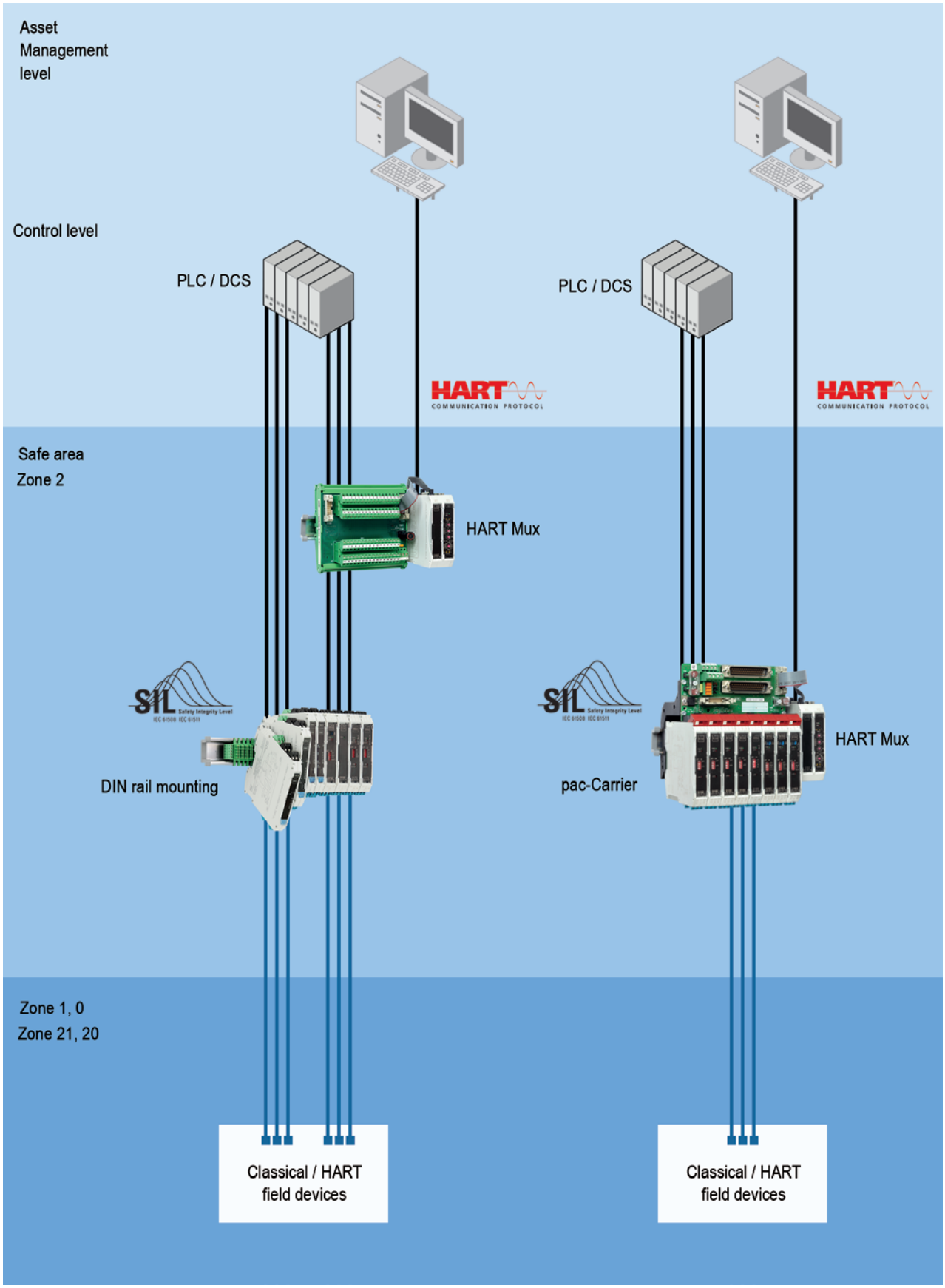

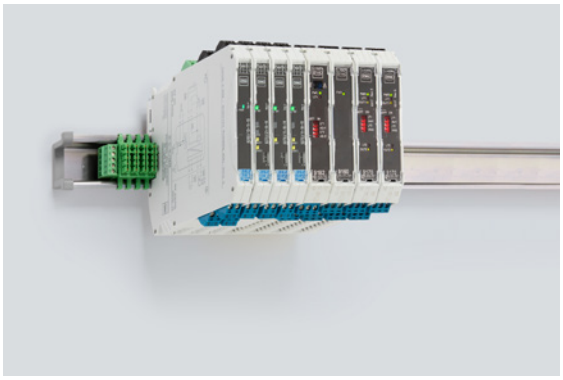

- New: modules with a width of just 12 mm
- Time-saving system for wiring: pac-Bus or pac-Carrier
- Wide array of applications: can be used for SIL applications up to SIL 3
- HART-capable

WebCode ISpacA

The combination of pac-Bus and ISpac isolators makes it incredibly easy to connect the auxiliary power supply and read error messages: All you need to do is snap the pac-Bus and the device onto the DIN rail and the wiring is complete; power is supplied via the DIN rail. This is the only such module on the market for which all devices can be mounted on a DIN rail or in the pac-Carrier.

All ISpac isolators for analogue signals can transmit HART signals. This combination of isolators, HART multiplexers and transmission boards enables efficient transmission of these signals to asset management systems.

Consequently, ISpac isolators were designed for functional safety and are rated at SIL 2 or SIL 3, including devices with a trip-amplifier function.

Overview Typical Applications of Isolators

Symbol	Application	ISpac Type	Ex i signal circuit
	2-wire HART transmitter	9160 9260 9162 (with limit value)	Page 22 Page 25 Page 28
	4-wire HART transmitter	9260	Page 25
	i/p-converter, HART control valve	9165 9265	Page 30 Page 32
	Resistance thermometers, resistance temperature detectors, potentiometer	9182 9282 9180	Page 50 Page 53 Page 48
	Contact, NAMUR proximity switch	9170 9270	Page 34 Page 36
	Solenoid valve, LED indicating lamp, horn	9175 9176 9275 9276	Page 40 Page 44 Page 42 Page 46
	Vibration sensor	9147	Page 20

Vibration Transducer Supply Unit
Series 9147



- Space-saving dual-channel version reduces installation costs
- Easily accessible rotary switch makes adjustment simple
- Can be used up to SIL 2 (IEC 61508)

WebCode 9147A

9147 series vibration transducer supply units connect vibration, acceleration and speed sensors to condition monitoring systems. The measuring signals are galvanically separated when they are transmitted. They are transmitted at frequencies of up to 50 kHz. These units have already been tested with numerous sensors from well-known manufacturers such as Bently Nevada and are in use in systems across the globe.

	IECEx / ATEX					
Zone	0	1	2	20	21	22
Ex interface	•	•	•	•	•	•
Installation in			•			

	NEC 500 CEC Appendix J					
	Class I		Class II		Class III	
Division	1	2	1	2	1	2
Ex interface	•	•	•	•	•	•
Installation in		•				

	CEC Section 18					
	NEC® 505 Class I			NEC® 506		
Zone	0	1	2	20	21	22
Ex interface	•	•	•			
Installation in			•			

Selection Table

Product variant	Vibration Transducer Supply Unit				
Number of channels	Product Type	Art. No.	Listprice €	PS	Weight kg
1	9147/10-99-10s	212432	362.50	21	0.150
2	9147/20-99-10s	212433	527.30	21	0.210

The order numbers listed in the table are for devices equipped with screw terminals. Variants with a spring clamp terminal are available.
Further versions on the Internet r-stahl.com.

Technical Data

Explosion Protection	
IECEx gas explosion protection	Ex ec [ia Ga] IIC T4 Gc
IECEx dust explosion protection	[Ex ia Da] IIIC
IECEx firedamp protection	[Ex ia Ma] I
ATEX gas explosion protection	II 3 (1) G Ex ec [ia Ga] IIC T4 Gc
ATEX dust explosion protection	II (1) D [Ex ia Da] IIIC
ATEX firedamp protection	I (M1) [Ex ia Ma] I
EAC gas explosion protection	2 Ex nA [ia Ga] IIC T4 Gc X
EAC dust explosion protection	[Ex ia Da] IIIC
Certificates	ATEX (BVS), Canada (FM), EAC (ENDCE), IECEx (BVS), India (PESO), SIL (exida), USA (FM)
Ship approval	CCS, EU RO MR
Installation	in Zone 2

Technical Data	
Explosion Protection	
Further information	see respective certificate and operating instructions
Safety Data	
Maximum voltage U_o	26.3 V
Maximum current I_o	88.3 mA
Maximum power P_o	579 mW
Safety-related maximum voltage	253 V
Functional Safety	
SIL	2
Electrical Data	
Output current for 2-wire operation	2.6 / 4.3 / 7.9 mA at -10 V
Output current for 3-wire operation	10 mA at -20 V; 20 mA at -17 V
Auxiliary Power	
Auxiliary power	24 V DC
Power dissipation max.	1.4 W
Input	
Input signal	-20 ... -0.5 V
Input functional range	-24 – 0 V
Input resistance	10 kΩs
Output	
Output signal	-20 to -0.5 V
Signal transmission frequency range	0 – 50 kHz
Ambient Conditions	
Ambient temperature	-20 °C ... +70 °C (Single device) -20 °C ... +70 °C (Group assembly)
Storage temperature	-40 °C ... +80 °C
Mounting / Installation	
Mounting type	NS35/15, NS35/7.5 DIN rail

Dimensional Drawings (All Dimensions in mm [inches]) – Subject to Alterations

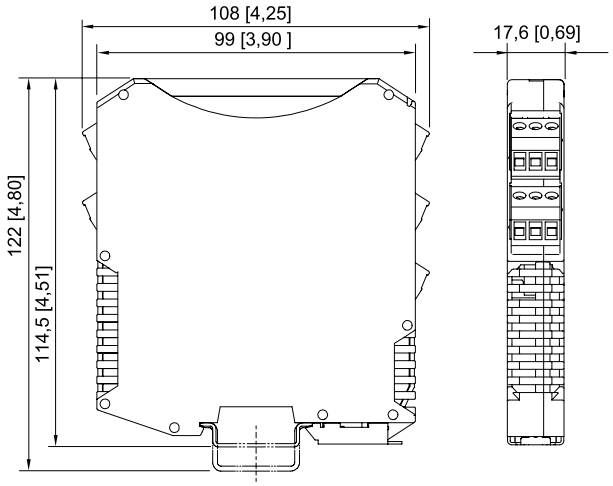

ISpac Series 9146, 9147, 9160, 9162, 9163, 9165, 9167, 9170, 9172, 9175, 9176, 9180, 9182, 9193,
ISbus Series 9412 with screw terminal

Transmitter Supply Unit
Series 9160



- Can be used universally for two- and three-wire transmitters and mA sources (four-wire transmitters)
- High degree of accuracy
- Standard versions can be used up to SIL 2, special version up to SIL 3 (IEC/EN 61508) available

WebCode 9160A

9160 series transmitter supply units can be used for the intrinsically safe operation of two- and three-wire transmitters or intrinsically safe mA sources such as four-wire transmitters. The unit allows HART signals to be transmitted in both directions. The portfolio includes single- and dual-channel units and a version for signal duplication. Special versions are available for higher output voltages and SIL 3.

	IECEx / ATEX					
Zone	0	1	2	20	21	22
Ex interface	•	•	•	•	•	•
Installation in			•			

	NEC 500 CEC Appendix J					
	Class I		Class II		Class III	
Division	1	2	1	2	1	2
Ex interface	•	•	•	•	•	•
Installation in		•				

	CEC Section 18					
	NEC® 505 Class I			NEC® 506		
Zone	0	1	2	20	21	22
Ex interface	•	•	•			
Installation in			•			

Selection Table

Product variant			Transmitter supply unit							
Number of channels	Input	Output A	Output B	LFD relay	SIL	Product Type	Art. No.	Listprice €	PS	Weight kg
1	0/4 ... 20 mA with HART	0/4 ... 20 mA	–	Yes	2	9160/13-11-11s	214895▲	257.10	21	0.195
		0/4 ... 20 mA	0/4 ... 20 mA (without HART)	Yes	2	9160/19-11-11s	220324▲	400.90	21	0.195
2	0/4 ... 20 mA with HART	0/4 ... 20 mA	0/4 ... 20 mA	Yes	2	9160/23-11-11s	220322▲	400.90	21	0.200

LFD – line fault diagnosis
no – device transmits line fault on the field side via the 4 ... 20 mA signal. Without LED / relay contact.
yes – device transmits line fault on the field side via the 4 ... 20 mA signal. With LED / relay contact.

The order numbers listed in the table are for devices equipped with screw terminals.

Further versions on the Internet r-stahl.com.

Technical Data

Explosion Protection	
IECEx gas explosion protection	Ex nA nC [ia Ga] IIC T4 Gc
IECEx dust explosion protection	[Ex ia Da] IIIC
IECEx firedamp protection	[Ex ia Ma] I
ATEX gas explosion protection	Ⓔx II 3 (1) G Ex nA nC [ia Ga] IIC T4 Gc
ATEX dust explosion protection	Ⓔx II (1) D [Ex ia Da] IIIC
ATEX firedamp protection	Ⓔx I (M1) [Ex ia Ma] I

Technical Data	
Explosion Protection	
EAC gas explosion protection	2 Ex nA nC [ia Ga] IIC T4 Gc X
EAC dust explosion protection	[Ex ia Da] IIIC
Certificates	ATEX (BVS), Brazil (ULB), Canada (FM), EAC (ENDCE), IECEx (BVS), India (PESO), Korea (KTL), Russia (Meteorological certificate), SIL (exida), USA (FM)
Ship approval	CCS, EU RO MR
Auxiliary Power	
Auxiliary power	24 V DC
Input	
Input signal	0/4 ... 20 mA with HART
Ex i input supply voltage for transmitter	≥ 16 V at 20 mA (for 2-wire)
Supply voltage for transmitter	≥ 16 V at 20 mA
Output	
Output	0/4 ... 20 mA with HART
Load resistance R_L	0 ... 600 Ω (terminal 1+ / 2- or 5+ / 6-) 0 ... 379 Ω (terminal 3+ / 2- or 4+ / 6-) (with internal 221 Ω resistor for HART)
Load resistance R_L max. HART	379 Ω
Load R_L max. with resistor	379 Ω
Load resistance R_L max.	600 Ω
Load resistance R_L max. note	With internal 221 Ω resistor
Temperature influence error limits	≤ 0,05 % / 10K
Deviation	≤ 0,1 %
Ambient Conditions	
Ambient temperature	-20 °C ... +70 °C (Single device) -20 °C ... +60 °C (Group assembly)
Storage temperature	-40 °C ... +80 °C
Mounting / Installation	
Mounting type	NS35/15, NS35/7.5 DIN rail

Accessories

Figure	Description	Art. No.	Listprice €	PS	Weight kg
Terminal set for pac-Bus					
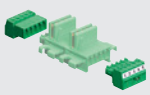	For the supply of 24 V DC auxiliary power via terminals (alternative to using the supply module 9193/21-11-11), with jumper for error message chain for ISpac module 91xx	160730▲	10.20	21	0.008

▲ Preferred products – in stock or available at short notice

A3

Dimensional Drawings (All Dimensions in mm [inches]) – Subject to Alterations

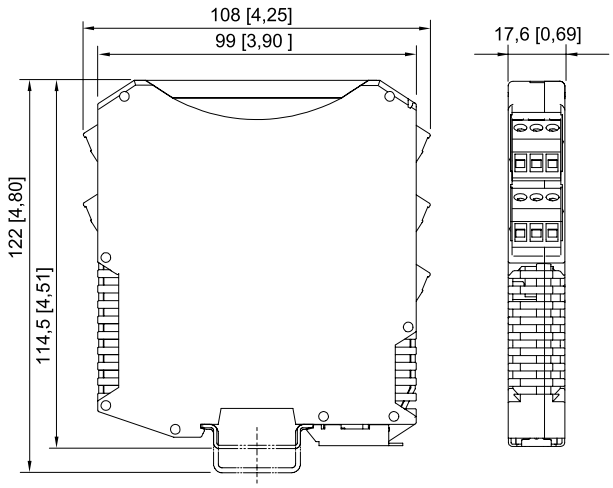

ISpac Series 9146, 9147, 9160, 9162, 9163, 9165, 9167, 9170, 9172, 9175, 9176, 9180, 9182, 9193,
ISbus Series 9412 with screw terminal

Load Resistance R_L

Output version (control) **0/4 ... 20 mA passive / sink with HART**

Type 9160/..-10-10s

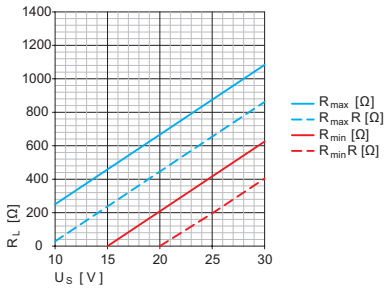

U_S	supply voltage
R_L	load resistance
R_{max}	max. load resistance terminals 1, 2 & 5, 6
R_{min}	min. load resistance terminals 1, 2 & 5, 6
$R_{max\ R}$	max. load resistance terminals 1, 3 & 4, 6
$R_{min\ R}$	min. load resistance terminals 1, 3 & 4, 6



- Universal use for 2-wire transmitters and mA sources (4-wire transmitter)
- Slim design – 12.5 mm wide – for one- and two-channel versions
- Can be used for safety levels up to SIL 2 (IEC/EN 61508)

WebCode 9260A

Series 9260 transmitter supply units can be used for the intrinsically safe operation of two-wire transmitters or intrinsically safe mA sources such as 4-wire transmitters. The device allows HART signals to be transmitted in both directions. The portfolio includes single- and dual-channel devices and a version for signal duplication.

	IECEx / ATEX					
Zone	0	1	2	20	21	22
Ex interface	•	•	•	•	•	•
Installation in			•			

	NEC 500 CEC Appendix J					
	Class I		Class II		Class III	
Division	1	2	1	2	1	2
Ex interface	•	•	•	•	•	•
Installation in		•				

	CEC Section 18					
	NEC® 505 Class I			NEC® 506		
Zone	0	1	2	20	21	22
Ex interface	•	•	•			
Installation in			•			

Selection Table

Output version (control)		0/4 ... 20 mA active / passive with HART						
Number of channels	Input signal	Output A	Output B	Product Type	Art. No.	Listprice €	PS	Weight kg
1	0/4 ... 20 mA with HART	0/4 ... 20 mA	–	9260/13-11-10s	261384 ▲	257.10	21	0.185
Output version (control)		0/4 ... 20 mA active / with HART						
Number of channels	Input signal	Output A	Output B	Product Type	Art. No.	Listprice €	PS	Weight kg
1	0/4 ... 20 mA with HART	0/4 ... 20 mA	0/4 ... 20 mA (without HART)	9260/19-11-10s	261385 ▲	371.20	21	0.195
2	4 ... 20 mA with HART	4 ... 20 mA	4 ... 20 mA	9260/23-11-10s	261386 ▲	371.20	21	0.195

Technical Data

Variant	9260/13-11-10s	9260/19-11-10s	9260/23-11-10s
Explosion Protection			
IECEx gas explosion protection	Ex nA [ia Ga] IIC T4 Gc	Ex nA [ia Ga] IIC T4 Gc	Ex nA [ia Ga] IIC T4 Gc
IECEx dust explosion protection	[Ex ia Da] IIIC	[Ex ia Da] IIIC	[Ex ia Da] IIIC
IECEx firedamp protection	[Ex ia Ma] I		
ATEX gas explosion protection	⟨Ex⟩ II 3 (1) G Ex nA [ia Ga] IIC T4 Gc	⟨Ex⟩ II 3 (1) G Ex nA [ia Ga] IIC T4 Gc	⟨Ex⟩ II 3 (1) G Ex nA [ia Ga] IIC T4 Gc
ATEX dust explosion protection	⟨Ex⟩ II (1) D [Ex ia Da] IIIC	⟨Ex⟩ II (1) D [Ex ia Da] IIIC	⟨Ex⟩ II (1) D [Ex ia Da] IIIC
ATEX firedamp protection	⟨Ex⟩ I (M1) [Ex ia Ma] I		
Certificates	ATEX (BVS), Canada / USA (UL), IECEx (BVS), SIL (BVS)	ATEX (BVS), Canada / USA (UL), IECEx (BVS), SIL (BVS)	ATEX (BVS), Canada / USA (UL), IECEx (BVS), SIL (BVS)
Ship approval	DNV GL	DNV GL	DNV GL

Transmitter Supply Unit
Series 9260 Slim Design 12.5 mm Wide

Technical Data

Variant	9260/13-11-10s	9260/19-11-10s	9260/23-11-10s
Safety Data			
Maximum voltage U_o	25.2 V	25.2 V	25.2 V
Maximum current I_o	93 mA	93 mA	93 mA
Maximum power P_o	587 mW	587 mW	587 mW
Safety-related maximum voltage	253 V AC	253 V AC	253 V AC
Functional Safety			
SIL	2	2	2
Electrical Data			
LFD relay	No	No	No
Input			
Input function	Isolation amplifier Transmitter power unit	Isolation amplifier Transmitter power unit	Transmitter power unit
Supply voltage for transmitter	≥ 16 V at 20 mA	≥ 16 V at 20 mA	≥ 16 V at 20 mA
Output			
Load resistance R_L max.	1000 Ω	450 Ω	450 Ω
Deviation	≤ 0,1 %	≤ 0,1 %	≤ 0,1 %
Temperature influence error limits	< 0.1% / 10 K	< 0.1% / 10 K	< 0.1% / 10 K
Ambient Conditions			
Ambient temperature	-20 °C ... +60 °C	-20 °C ... +60 °C	-20 °C ... +60 °C
Storage temperature	-40 °C ... +80 °C	-40 °C ... +80 °C	-40 °C ... +80 °C
Mounting / Installation			
Mounting type	NS35/15, NS35/7.5 DIN rail	NS35/15, NS35/7.5 DIN rail	NS35/15, NS35/7.5 DIN rail

Accessories

Figure	Description	Art. No.	Listprice €	PS	Weight kg
Supply modul					
	Redundant supply of 24 V DC auxiliary power (with fuse) and reading the collective error message for 92xx series ISpac modules which support this function. Connection screw terminal	268183▲	120.40	29	0.135
pac-Bus					
	Wiring for power supply and common error messaging	262928▲	9.40	29	0.006

Dimensional Drawings (All Dimensions in mm [inches]) – Subject to Alterations

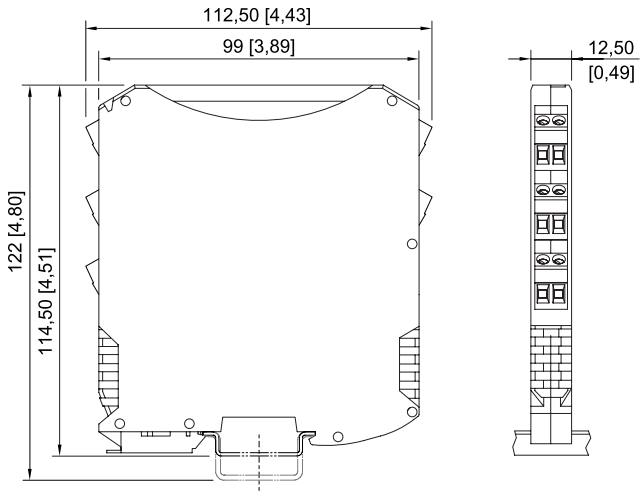

ISpac Series 9260, 9265, 9270, 9275, 9276,
9282 with screw terminal

Transmitter Supply Unit
Series 9162 with Limit Value



- Universal use for transmitters and mA sources (4-wire transmitters) with two configurable limit values and one 4 to 20 mA output
- Bidirectional HART transmission
- Can be used up to SIL 2 (IEC/EN 61508)

WebCode 9162A

9162 series transmitter supply units with limit values can be used for the intrinsically safe operation of two- and three-wire transmitters or for connecting to intrinsically safe mA sources. Two limit values can be easily set using the “ISpac Wizard” software. If the value exceeds or falls below these limit values, these units will trip an electronic contact. A wire-breakage and short-circuit monitoring function provides increased availability.

	IECEx / ATEX					
Zone	0	1	2	20	21	22
Ex interface	•	•	•	•	•	•
Installation in			•			

	NEC 500 CEC Appendix J					
	Class I		Class II		Class III	
Division	1	2	1	2	1	2
Ex interface	•	•	•	•	•	•
Installation in		•				

	CEC Section 18					
	NEC® 505 Class I			NEC® 506		
Zone	0	1	2	20	21	22
Ex interface	•	•	•			
Installation in			•			

Selection Table

Number of channels: 1

Input	Output	Limit contact (per channel)	Product Type	Art. No.	Listprice €	PS	Weight kg
4 ... 20 mA with HART	4 ... 20 mA with HART	2 NOs	9162/13-11-14s	238251▲	458.90	21	0.225

The order numbers listed in the table are for devices equipped with screw terminals.
Further versions on the Internet r-stahl.com.

Technical Data

Explosion Protection	
IECEx gas explosion protection	Ex nA nC [ia Ga] IIC T4 Gc
IECEx dust explosion protection	[Ex ia Da] IIIC
ATEX gas explosion protection	Ⓔx II 3 (1) G Ex nA nC [ia Ga] IIC T4 Gc
ATEX dust explosion protection	Ⓔx II (1) D [Ex ia Da] IIIC
EAC gas explosion protection	Ex 2 Ex nA nC [ia Ga] IIC T4 Gc X
EAC dust explosion protection	Ex [Ex ia Da] IIIC
Certificates	ATEX (BVS), Canada (FM), IECEx (BVS), India (PESO), SIL (exida), USA (FM)
Ship approval	CCS, EU RO MR
Safety Data	
Maximum voltage U_o	27 V
Maximum current I_o	87.9 mA
Maximum power P_o	574 mW

Technical Data	
Safety Data	
Safety-related maximum voltage	253 V
Functional Safety	
SIL	2
Electrical Data	
Limiting values configuration	using ISpac wizard (V3.04 and following)
Auxiliary Power	
Auxiliary power	24 V DC
Nominal current	85 mA
Input	
Line fault and loss of power signalisation	- Contact (30 V / 100 mA) closed to ground in case of fault - pac-Bus, floating contact (30 V / 100 mA)
Output	
Output signal	4 ... 20 mA with HART
Load resistance R_L	0 … 600 Ω (terminal 1+ / 2-)
Switching voltage limiting values	≤ ± 30 V
Switching current limiting values	≤ 170 mA
Ambient Conditions	
Ambient temperature	-40 °C ... +70 °C (Single device) -40 °C ... +60 °C (Group assembly)
Storage temperature	-40 °C ... +80 °C
Mounting / Installation	
Mounting type	NS35/15, NS35/7.5 DIN rail

Dimensional Drawings (All Dimensions in mm [inches]) – Subject to Alterations

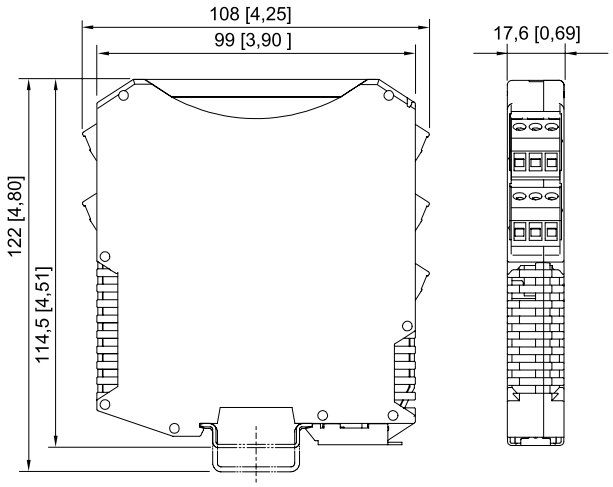

ISpac Series 9146, 9147, 9160, 9162, 9163, 9165, 9167, 9170, 9172, 9175, 9176, 9180, 9182, 9193,
ISbus Series 9412 with screw terminal



- Compact single- and dual-channel Ex i output isolating repeater
- Wire-breakage and short-circuit monitoring system, which can be disabled and features a signalling contact
- Can be used up to SIL 2 (IEC/EN 61508)

WebCode 9165A

9165 series isolating repeaters can be used for the intrinsically safe operation of control valves, I/P transducers or indicators. They transmit superimposed HART communication signals in both directions. The input, output and auxiliary power are galvanically separated from one another. The channels in the two-channel variants are galvanically separated from one another.

	IECEx / ATEX					
Zone	0	1	2	20	21	22
Ex interface		•	•	•	•	•
Installation in			•			

	NEC 500 CEC Appendix J					
	Class I		Class II		Class III	
Division	1	2	1	2	1	2
Ex interface	•	•	•	•	•	•
Installation in		•				

	CEC Section 18					
	NEC® 505			NEC® 506		
	Class I					
Zone	0	1	2	20	21	22
Ex interface	•	•	•			
Installation in			•			

Selection Table

Input signal	Output signal	LFD relay	Product Type	Art. No.	Listprice €	PS	Weight kg
Number of channels 1							
0/4 ... 20 mA with HART	0/4 ... 20 mA with HART	Yes	9165/16-11-11s	201270▲	263.70	21	0.180
Number of channels 2							
Input signal	Output signal	LFD relay	Product Type	Art. No.	Listprice €	PS	Weight kg
0/4 ... 20 mA with HART	0/4 ... 20 mA with HART	Yes	9165/26-11-11s	201272▲	434.90	21	0.190

The order numbers listed in the table are for devices equipped with screw terminals.
Further versions on the Internet r-stahl.com.

LFD - line fault diagnosis
no - device transmits field-side line fault via 4 ... 20 mA signal and via LED. Function cannot be deactivated.
yes - device transmits field-side line fault via 4 ... 20 mA signal via LED and relay contact.

Technical Data

Explosion Protection	
IECEx gas explosion protection	Ex nA nC [ia Ga] IIC T4 Gc
IECEx dust explosion protection	[Ex ia Da] IIIC
ATEX gas explosion protection	Ⓔx II 3 (1) G Ex nA nC [ia Ga] IIC T4 Gc
ATEX dust explosion protection	Ⓔx II (1) D [Ex ia Da] IIIC
EAC gas explosion protection	2 Ex nA nC [ia Ga] IIC T4 Gc X
EAC dust explosion protection	[Ex ia Da] IIIC

Technical Data	
Explosion Protection	
Certificates	ATEX (BVS), Canada (FM), EAC (ENDCE), IECEx (BVS), India (PESO), Korea (KTL), Russia (Meteorological certificate), SIL (exida), USA (FM)
Ship approval	CCS, EU RO MR
Safety Data	
Maximum voltage U_o	25.6 V
Maximum current I_o	96 mA
Maximum power P_o	605 mW
Safety-related maximum voltage	253 V
Output	
Load resistance R_L	0 ... 800 Ω
Ambient Conditions	
Ambient temperature	-20 °C ... +70 °C (Single device) -20 °C ... +60 °C (Group assembly)
Storage temperature	-40 °C ... +80 °C
Mounting / Installation	
Mounting type	DIN rail (NS35/15, NS35/7.5)

Dimensional Drawings (All Dimensions in mm [inches]) – Subject to Alterations

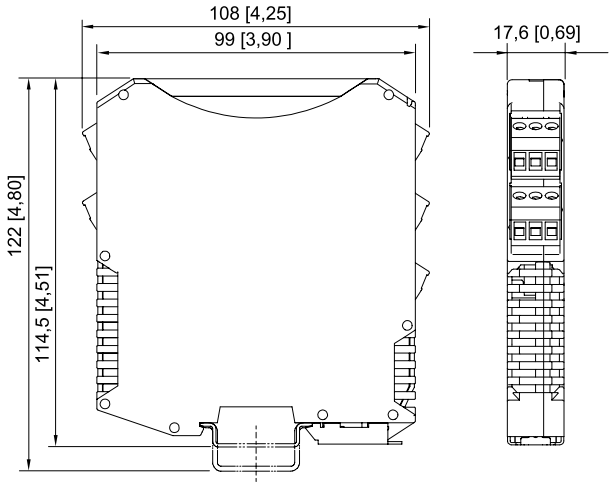

ISpac Series 9146, 9147, 9160, 9162, 9163, 9165, 9167, 9170, 9172, 9175, 9176, 9180, 9182, 9193, ISbus Series 9412 with screw terminal

Isolating Repeater
Series 9265 Slim Design 12.5 mm Wide



- Compact one- and two-channel Ex i output isolating repeater
- Space savings due to a slim design – 12.5 mm wide
- Can be used up to SIL 2 (IEC/EN 61508)

WebCode 9265A

9265 series Ex i isolating repeaters can be used for the intrinsically safe operation of control valves, I/P transducers or indicators. They transmit superimposed HART communication signals in both directions. The input, output and auxiliary power are galvanically separated from one another. The two channels in the two-channel variants are galvanically separated from one another.

	IECEx / ATEX					
Zone	0	1	2	20	21	22
Ex interface	•	•	•	•	•	•
Installation in			•			

	NEC 500 CEC Appendix J					
	Class I		Class II		Class III	
Division	1	2	1	2	1	2
Ex interface	•	•	•	•	•	•
Installation in		•				

	CEC Section 18					
	NEC® 505 Class I			NEC® 506		
Zone	0	1	2	20	21	22
Ex interface	•	•	•			
Installation in			•			

Selection Table

Product variant		Isolating repeater						
Number of channels	Input signal	Output signal	LFD relay	Product Type	Art. No.	Listprice €	PS	Weight kg
1	0/4 ... 20 mA with HART	0/4 ... 20 mA with HART	No	9265/16-11-10s	261403	253.60	21	0.185
2	0/4 ... 20 mA with HART	0/4 ... 20 mA with HART	No	9265/26-11-10s	261404	411.20	21	0.195

The order numbers listed in the table are for devices equipped with screw terminals.
Further versions on the Internet r-stahl.com.

Technical Data

Variant	9265/16-11-10s	9165/26-11-10s
Explosion Protection		
IECEx gas explosion protection	Ex ec [ia Ga] IIC T4 Gc	Ex ec [ia Ga] IIC T4 Gc
IECEx dust explosion protection	[Ex ia Da] IIIC	[Ex ia Da] IIIC
IECEx firedamp protection	Ex [Ex ia Ma] I	Ex [Ex ia Ma] I
ATEX gas explosion protection	Ⓔx II 3 (1) G Ex ec [ia Ga] IIC T4 Gc	Ⓔx II 3 (1) G Ex ec [ia Ga] IIC T4 Gc
ATEX dust explosion protection	Ⓔx II (1) D [Ex ia Da] IIIC	Ⓔx II (1) D [Ex ia Da] IIIC
ATEX firedamp protection	Ⓔx I (M1) Ex [Ex ia Ma] I	Ⓔx I (M1) Ex [Ex ia Ma] I
Certificates	ATEX (BVS), IECEx (BVS), SIL (BVS)	ATEX (BVS), IECEx (BVS), SIL (BVS)
Ship approval	DNV GL	
Safety Data		
Maximum voltage U_o	25.2 V	25.2 V

Technical Data

Variant	9265/16-11-10s	9165/26-11-10s
Safety Data		
Maximum current I_o	93 mA	93 mA
Maximum power P_o	587 mW	587 mW
Safety-related maximum voltage	253 V	253 V
Output		
Load resistance R_L max.	700 Ω	700 Ω
Ambient Conditions		
Ambient temperature	-40 °C ... +70 °C	-40 °C ... +70 °C
Storage temperature	-40 °C ... +85 °C	-40 °C ... +85 °C
Mounting / Installation		
Mounting type	NS35/15, NS35/7.5 DIN rail	NS35/15, NS35/7.5 DIN rail

Accessories

Figure	Description	Art. No.	Listprice €	PS	Weight kg
Supply modul					
	Redundant supply of 24 V DC auxiliary power (with fuse) and reading the collective error message for 92xx series ISpac modules which support this function. Connection screw terminal	268183▲	120.40	29	0.135
pac-Bus					
	Wiring for power supply and common error messaging	262928▲	9.40	29	0.006

Dimensional Drawings (All Dimensions in mm [inches]) – Subject to Alterations

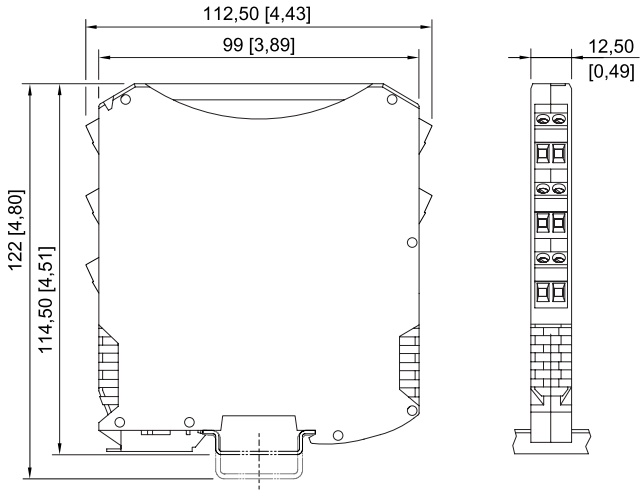

ISpac Series 9260, 9265, 9270, 9275, 9276, 9282 with screw terminal

▲ Preferred products – in stock or available at short notice



- Can be used up to SIL 2 (IEC/EN 61508)
- Wire-breakage and short-circuit monitoring signalization, which can be disabled
- Optional line fault transparency version available: The device notifies the control system directly of any field-side line faults via the signal output.

WebCode **9170A**

9170 series switching repeaters can be used for intrinsically safe operation of contacts, NAMUR proximity sensors or optocouplers. Models are available with one or two channels. The intrinsically safe digital input is always galvanically separated from the output and auxiliary power. The channels in the two-channel devices are galvanically separated. The devices transmit frequencies of up to 10 kHz, and the output signal can be inverted.

	IECEx / ATEX					
Zone	0	1	2	20	21	22
Ex interface	•	•	•	•	•	•
Installation in			•			

	NEC 500 CEC Appendix J					
	Class I		Class II		Class III	
Division	1	2	1	2	1	2
Ex interface	•	•	•	•	•	•
Installation in		•				

	CEC Section 18					
	NEC® 505 Class I			NEC® 506		
Zone	0	1	2	20	21	22
Ex interface	•	•	•			
Installation in			•			

Selection Table

Output version (control)		Power relay (250 V / 4 A)					
Number of channels	Auxiliary power	Output	Product Type	Art. No.	Listprice €	PS	Weight kg
1	110 – 230 V AC	2 change-over contacts - power relay	9170/11-13-21s	203294▲	135.30	21	0.180
2	24 V DC	1 change-over contact - power relay	9170/21-12-11s	203147▲	184.90	21	0.225
	110 – 230 V AC	1 change-over contact - power relay	9170/21-12-21s	203281▲	160.80	21	0.225
Output version (control)		Signal relay (125 V / 1 A)					
Number of channels	Auxiliary power	Output	Product Type	Art. No.	Listprice €	PS	Weight kg
1	24 V DC	2 change-over contacts - signal relay	9170/11-11-11s	203283▲	136.30	21	0.180
2	24 V DC	1 change-over contact - signal relay	9170/21-10-11s	203143▲	171.50	21	0.225
	24 V DC	2 NO - signal relays	9170/21-11-11s	203145▲	174.00	21	0.225

The order numbers listed in the table are for devices equipped with screw terminals.
Further versions on the Internet r-stahl.com.

LFT - line fault transparency
Device signals line fault on field side to the control directly via the signal output.

Technical Data

Variant	Power relay (250 V / 4 A)	Signal relay (125 V / 1 A)
Explosion Protection		
IECEx gas explosion protection	Ex [Ex ia Ga] IIC	Ex nA nC [ia Ga] IIC T4 Gc
IECEx dust explosion protection	[Ex ia Da] IIIC	[Ex ia Da] IIIC
ATEX gas explosion protection	Ⓔx II (1) G Ex [Ex ia Ga] IIC	Ⓔx II 3 (1) G Ex nA nC [ia Ga] IIC T4 Gc
ATEX dust explosion protection	Ⓔx II (1) D [Ex ia Da] IIIC	Ⓔx II (1) D [Ex ia Da] IIIC
EAC gas explosion protection	[Ex ia Ga] IIC X	2Ex nA nC [ia Ga] IIC T4 Gc X
EAC dust explosion protection	[Ex ia Da] IIIC	[Ex ia Da] IIIC
Certificates	ATEX (BVS), Brazil (ULB), Canada (FM), Canada (UL), EAC (ENDCE), IECEx (BVS), India (PESO), Korea (KGS), SIL (exida), USA (FM), USA (UL)	ATEX (BVS), Brazil (ULB), Canada (FM), EAC (ENDCE), IECEx (BVS), India (PESO), Korea (KGS), SIL (exida), USA (FM)
Ship approval	CCS, EU RO MR	CCS, EU RO MR
Installation	in safe area	in Zone 2, Division 2 and in the safe area
Notes	see respective certificate and operating instructions	
Safety Data		
Maximum voltage U_o	9.6 V	9.6 V
Maximum current I_o	10 mA	10 mA
Maximum power P_o	24 mW	24 mW
Safety-related maximum voltage	253 V	253 V
Functional Safety		
SIL	2	2
Input		
Input signal	In accordance with EN 60947-5-6 (NAMUR)	In accordance with EN 60947-5-6 (NAMUR)
Output		
Output switching frequency	6 Hz	15 Hz
Ambient Conditions		
Ambient temperature	-20 °C ... +70 °C (Single device) -20 °C ... +65 °C (Group assembly)	-20 °C ... +70 °C (Single device) -20 °C ... +60 °C (Group assembly)
Storage temperature	-40 °C ... +80 °C	-40 °C ... +80 °C
Mounting / Installation		
Mounting type	NS35/15, NS35/7.5 DIN rail	NS35/15, NS35/7.5 DIN rail

Dimensional Drawings (All Dimensions in mm [inches]) – Subject to Alterations

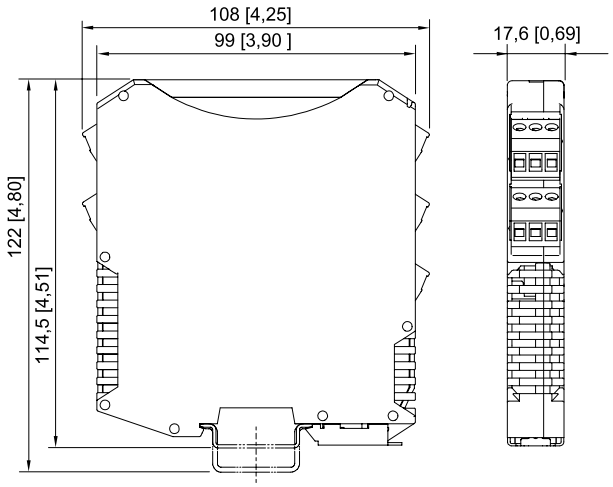

ISpac Series 9146, 9147, 9160, 9162, 9163, 9165, 9167, 9170, 9172, 9175, 9176, 9180, 9182, 9193,
ISbus Series 9412 with screw terminal

Switching Repeater

Series 9270 Slim Design 12.5 mm Wide



- Slim design – 12.5 mm wide – for one- and two-channel versions
- Can be used for functional safety levels up to SIL 2 (IEC/EN 61508)
- A wire breakage and short-circuit monitoring system, which can be disconnected and includes messages

WebCode 9270A

Series 9270 switching repeaters can be used for operating contacts, NAMUR proximity sensors or optocouplers. A relay output or electronic output transmits the signals to the control level. The intrinsically safe digital input is galvanically separated from the output and auxiliary power.

	IECEx / ATEX					
Zone	0	1	2	20	21	22
Ex interface	•	•	•	•	•	•
Installation in			•			

	NEC 500 CEC Appendix J					
	Class I		Class II		Class III	
Division	1	2	1	2	1	2
Ex interface	•	•	•	•	•	•
Installation in		•				

	CEC Section 18					
	NEC® 505 Class I			NEC® 506		
Zone	0	1	2	20	21	22
Ex interface	•	•	•			
Installation in			•			

Selection Table

Number of channels	Output per channel	Product Type	Art. No.	Listprice €	PS	Weight kg
Output version (control)	Electronic (35 V /50 mA)					
1	2 electronic outputs	9270/11-19-15s	261412▲	177.90	21	0.160
2	1 electronic output	9270/21-14-14s	261413▲	209.80	21	0.165
Output version (control)	Relay (250 V / 2 A)					
Number of channels	Output per channel	Product Type	Art. No.	Listprice €	PS	Weight kg
1	1 change-over contact	9270/11-16-14s	261409▲	148.30	21	0.160
	2 NOs	9270/11-17-15s	261410▲	148.30	21	0.165
2	1 NO	9270/21-17-14s	261411▲	174.70	21	0.170

Technical Data

Variant	Electronic (35 V /50 mA)	Relay (250 V / 2 A)
Explosion Protection		
IECEx gas explosion protection	Ex nA Gc, [Ex ia Ga] IIC T4 Gc	Ex nA nC [Ex ia Ga] IIC T4 Gc
IECEx dust explosion protection	[Ex ia Da] IIIC	[Ex ia Da] IIIC
ATEX gas explosion protection	⟨Ex⟩ II 3 (1) G Ex nA Gc, [Ex ia Ga] IIC T4 Gc	⟨Ex⟩ II 3 (1) G Ex nA nC [Ex ia Ga] IIC T4 Gc
ATEX dust explosion protection	⟨Ex⟩ II (1) D [Ex ia Da] IIIC	⟨Ex⟩ II (1) D [Ex ia Da] IIIC
Certificates	ATEX (IBE), Canada / USA (UL), IECEx (IBE), SIL (exida)	ATEX (IBE), Canada / USA (UL), IECEx (IBE), SIL (exida)
Ship approval	DNV GL	DNV GL
Safety Data		
Maximum voltage U_o	9.6 V	9.6 V

Technical Data

Variant	Electronic (35 V /50 mA)	Relay (250 V / 2 A)
Safety Data		
Maximum current I_o	10 mA	10 mA
Maximum power P_o	25 mW	25 mW
Safety-related maximum voltage	253 V AC	253 V AC
Functional Safety		
SIL	2	2
Input		
Input signal	In accordance with EN 60947-5-6 (NAMUR)	In accordance with EN 60947-5-6 (NAMUR)
Output		
Output switching frequency	5 kHz	20 Hz
Output switching capacity	30 V DC	500 VA
Ambient Conditions		
Ambient temperature	-20 °C ... +60 °C	-20 °C ... +60 °C
Storage temperature	-40 °C ... +80 °C	-40 °C ... +80 °C
Mounting / Installation		
Mounting type	NS35/15, NS35/7.5 DIN rail	NS35/15, NS35/7.5 DIN rail

Dimensional Drawings (All Dimensions in mm [inches]) – Subject to Alterations

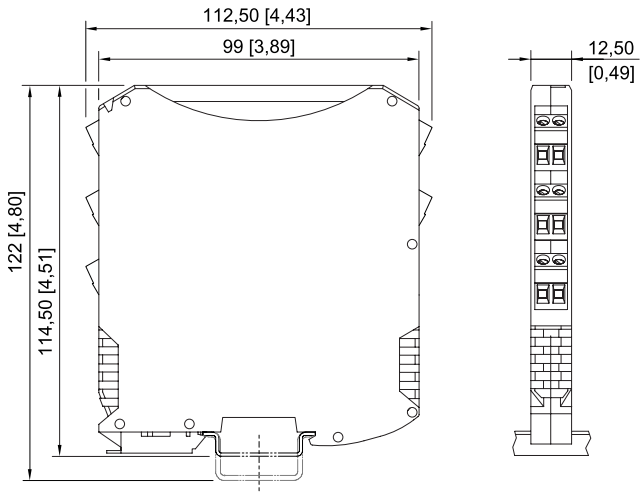

ISpac Series 9260, 9265, 9270, 9275, 9276, 9282 with screw terminal

I.S. Relay Module
Series 9172



- Binary input or output with two channels
- For separating intrinsically safe and non-intrinsically safe signal and control circuits
- Can be used up to SIL 2 (IEC/EN 61508)

WebCode 9172A

The 9172 series relay module separates intrinsically safe and non-intrinsically safe binary signal and control circuits. To do this, it makes intrinsically safe inputs and outputs available with two channels. Depending on the version, the device has either an intrinsically safe drive or an intrinsically safe output contact, and can therefore be used as an output or input isolator.

	IECEx / ATEX					
Zone	0	1	2	20	21	22
Ex interface	•	•	•	•	•	•
Installation in			•			

	NEC 500 CEC Appendix J					
	Class I		Class II		Class III	
Division	1	2	1	2	1	2
Ex interface	•	•	•	•	•	•
Installation in		•				

	CEC Section 18 NEC® 505			NEC® 506		
	Class I					
Zone	0	1	2	20	21	22
Ex interface	•	•	•			
Installation in			•			

Selection Table

Input signal Switching signal input	Ex i 14 – 30 V					
Number of channels	Output	Product Type	Art. No.	Listprice €	PS	Weight kg
2	Change-over contact - power relay	9172/20-11-00s	160363▲	152.40	21	0.190
Input Switching signal input	Non-Ex i signal 12 – 31.2 V					
Number of channels	Output	Product Type	Art. No.	Listprice €	PS	Weight kg
2	Change-over contact - Ex i	9172/21-11-00s	160369▲	152.40	21	0.190

The order numbers listed in the table are for devices equipped with screw terminals.
Further versions on the Internet r-stahl.com.

Technical Data

Variant	Input signal: Ex i	Input signal: Non-Ex i signal
Explosion Protection		
IECEx gas explosion protection	Ex nA nC [ia Ga] IIC T4 Gc	Ex nA nC [ia Ga] IIC T4 Gc
IECEx dust explosion protection	[Ex ia Da] IIIC	[Ex ia Da] IIIC
ATEX gas explosion protection	Ⓔx II (1) G Ex nA nC [ia Ga] IIC T4 Gc	Ⓔx II 3 (1) G Ex nA nC [ia Ga] IIC T4 Gc
ATEX dust explosion protection	Ⓔx II (1) D [Ex ia Da] IIIC	Ⓔx II (1) D [Ex ia Da] IIIC
EAC gas explosion protection	2Ex nA nC [ia Ga] IIC T4 Gc X	2 Ex nA nC [ia Ga] IIC T4 Gc X
EAC dust explosion protection	[Ex ia Da] IIIC	[Ex ia Da] IIIC

Technical Data

Variant	Input signal: Ex i	Input signal: Non-Ex i signal
Explosion Protection		
Certificates	ATEX (BVS), Canada (FM), EAC (ENDCE), IECEx (BVS), India (PESO), SIL (exida), USA (FM), USA (UL)	ATEX (BVS), Canada (FM), EAC (ENDCE), IECEx (BVS), India (PESO), SIL (exida), USA (FM), USA (UL)
Ship approval	CCS, EU RO MR	CCS, EU RO MR
Installation	in Zone 2, Division 2 and in the safe area	in Zone 2, Division 2 and in the safe area
Further information	see respective certificate and operating instructions	see respective certificate and operating instructions
Safety Data		
Max. voltage U_i	30 V	
Max. current I_i	150 mA	
Max. power P_i	1.3 W	
Internal capacitance C_i	Negligible	Negligible
Internal inductance L_i	Negligible	Negligible
Safety-related maximum voltage	253 V	253 V
Functional Safety		
SIL	2	2
Auxiliary Power		
Power dissipation max.	0.4 W	0.4 W
Auxiliary power	Without	Without
Ambient Conditions		
Ambient temperature	-20 °C ... +70 °C (Single device) -20 °C ... +60 °C (Group assembly)	-20 °C ... +70 °C (Single device) -20 °C ... +60 °C (Group assembly)
Storage temperature	-40 °C ... +80 °C	-40 °C ... +80 °C
Mounting / Installation		
Mounting type	NS35/15, NS35/7.5 DIN rail	NS35/15, NS35/7.5 DIN rail

Dimensional Drawings (All Dimensions in mm [inches]) – Subject to Alterations

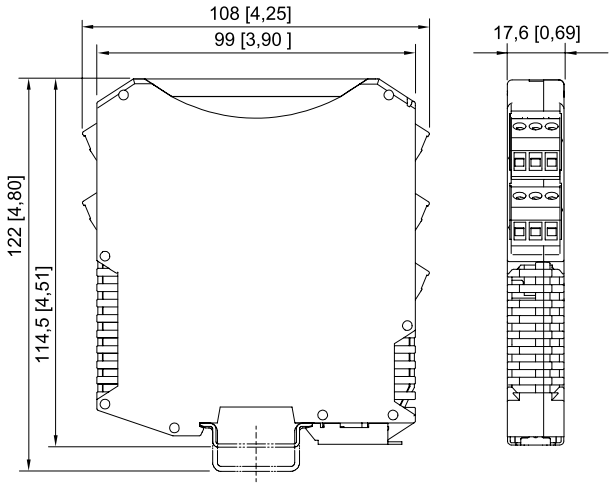

ISpac Series 9146, 9147, 9160, 9162, 9163, 9165, 9167, 9170, 9172, 9175, 9176, 9180, 9182, 9193,
ISbus Series 9412 with screw terminal



- Dual-channel versions reduce the required footprint
- Can be used up to SIL 3 (IEC/EN 61508)
- A wire breakage and short-circuit monitoring system, which can be disconnected and includes messages

WebCode 9175A

9175 series binary outputs issue binary signals via one or two channels for the intrinsically safe operation of intrinsically safe solenoid valves, indicators or horns. The devices feature three-way galvanic separation. A wire-breakage and short-circuit monitoring system, which can be disabled, directly monitors the state of the field circuit.

	IECEx / ATEX					
Zone	0	1	2	20	21	22
Ex interface	•	•	•	•	•	•
Installation in			•			

	NEC 500 CEC Appendix J					
	Class I		Class II		Class III	
Division	1	2	1	2	1	2
Ex interface	•	•	•	•	•	•
Installation in		•				

	CEC Section 18					
	NEC® 505 Class I			NEC® 506		
Zone	0	1	2	20	21	22
Ex interface	•	•	•			
Installation in			•			

Selection Table

Number of channels 1							
Output open-circuit voltage U_a	Max. output current $I_{a\ max}$	Internal Resistance R_i	Product Type	Art. No.	Listprice €	PS	Weight kg
25 V	35 mA	250 Ω	9175/10-16-11s	160416▲	232.10	21	0.175
Number of channels 2							
Output open-circuit voltage U_a	Max. output current $I_{a\ max}$	Internal Resistance R_i	Product Type	Art. No.	Listprice €	PS	Weight kg
25 V	35 mA / Channels parallel: 70 mA*	250 Ω / 125 Ω*	9175/20-16-11s	160419▲	337.30	21	0.190

* Parallel connection of the outputs possible; thus, doubling the output current.

The order numbers listed in the table are for devices equipped with screw terminals.
Further versions on the Internet r-stahl.com.

Technical Data

Explosion Protection	
IECEx gas explosion protection	Ex nA nC [ia Ga] IIC T4 Gc
IECEx dust explosion protection	[Ex ia Da] IIIC
ATEX gas explosion protection	Ⓔx II 3 (1) G Ex nA nC [ia Ga] IIC T4 Gc
ATEX dust explosion protection	Ⓔx II (1) D [Ex ia Da] IIIC
EAC gas explosion protection	Ex 2 Ex nA nC [ia Ga] IIC T4 Gc X
EAC dust explosion protection	Ex [Ex ia Da] IIIC
Certificates	ATEX (BVS), Brazil (ULB), Canada (FM), EAC (ENDCE), IECEx (BVS), India (PESO), Korea (KTL), SIL (exida), USA (FM), USA (UL)

Technical Data

Explosion Protection	
Ship approval	CCS, EU RO MR
Safety Data	
Maximum voltage U_o	27.6 V
Max. current I_o (Ex ia)	110 mA
Max. current I_o (Ex ib)	50 mA
Maximum power P_o	760 mW
Safety-related maximum voltage	253 V
Functional Safety	
SIL	3
Auxiliary Power	
Auxiliary power	24 V DC
Nominal current	80 mA
Input	
Input voltage for ON	15 – 31.2 V
Input voltage for OFF	0 – 5 V
Output	
Line fault and loss of power signalisation	- Contact (30 V / 100 mA) closed to ground in case of fault - pac-Bus, floating contact (30 V / 100 mA)
Ambient Conditions	
Ambient temperature	-20 °C ... +70 °C (Single device) -20 °C ... +60 °C (Group assembly)
Storage temperature	-40 °C ... +80 °C
Mounting / Installation	
Mounting type	NS35/15, NS35/7.5 DIN rail

Accessories

Figure	Description	Art. No.	Listprice €	PS	Weight kg
Terminal set for pac-Bus					
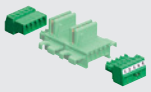	For the supply of 24 V DC auxiliary power via terminals (alternative to using the supply module 9193/21-11-11), with jumper for error message chain for ISpac module 91xx	160730▲	10.20	21	0.008

Dimensional Drawings (All Dimensions in mm [inches]) – Subject to Alterations

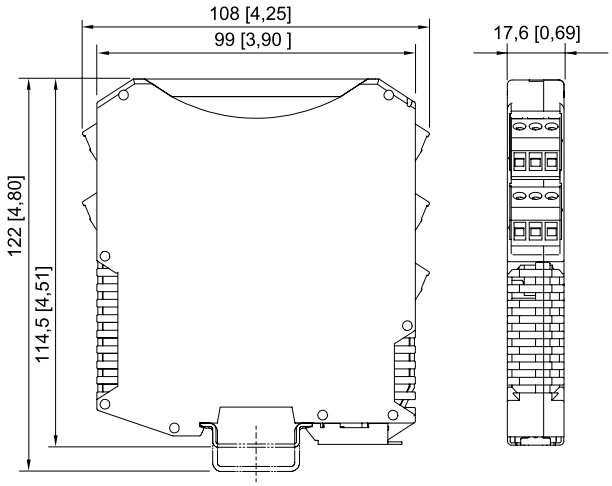

ISpac Series 9146, 9147, 9160, 9162, 9163, 9165, 9167, 9170, 9172, 9175, 9176, 9180, 9182, 9193, ISbus Series 9412 with screw terminal

Binary Output
Series 9275 Slim Design 12.5 mm Wide



- Space savings due to a slim design – 12.5 mm wide
- Can be used for functional safety levels up to SIL 3 (IEC/EN 61508)
- A wire breakage and short-circuit monitoring system, which can be disconnected and includes messages

WebCode 9275A

Series 9275 digital outputs issue signals for the operation of intrinsically safe solenoid valves, indicators or horns. The devices feature three-way galvanic separation.

	IECEx / ATEX					
Zone	0	1	2	20	21	22
Ex interface	•	•	•	•	•	•
Installation in			•			

	NEC 500 CEC Appendix J					
	Class I		Class II		Class III	
Division	1	2	1	2	1	2
Ex interface	•	•	•	•	•	•
Installation in		•				

	CEC Section 18 NEC® 505			NEC® 506		
	Class I					
Zone	0	1	2	20	21	22
Ex interface	•	•	•			
Installation in			•			

Selection Table

Number of channels: 1

Output open-circuit voltage U_a	Max. output current $I_{a\,max}$	Output internal resistance R_i	Product Type	Art. No.	Listprice €	PS	Weight kg
21.1 V	25.1 mA	641 Ω	9275/10-21-25-11s	261434 ▲	239.30	21	0.160
24.3 V	48 mA	297 Ω	9275/10-24-48-11s	261435 ▲	239.30	21	0.160

Technical Data

Variant	9275/10-21-25-11s	9275/10-24-48-11s
Explosion Protection		
IECEx gas explosion protection	Ex nA [ia Ga] IIC T4 Gc	Ex nA [ia Ga] IIC T4 Gc
IECEx dust explosion protection	[Ex ia Da] IIIC	[Ex ia Da] IIIC
ATEX gas explosion protection	⟨Ex⟩ II 3 (1) G Ex nA [ia Ga] IIC T4 Gc	⟨Ex⟩ II 3 (1) G Ex nA [ia Ga] IIC T4 Gc
ATEX dust explosion protection	⟨Ex⟩ II (1) D [Ex ia Da] IIIC	⟨Ex⟩ II (1) D [Ex ia Da] IIIC
Certificates	ATEX (IBE), Canada / USA (UL), IECEx (IBE), SIL (BVS)	ATEX (IBE), Canada / USA (UL), IECEx (IBE), SIL (BVS)
Ship approval	DNV GL	DNV GL
Safety Data		
Maximum voltage U_o	23.98 V	27.06 V
Max. current I_o (Ex ia)	37.4 mA	91.11 mA
Maximum power P_o	224 mW	616 mW
Safety-related maximum voltage	253 V AC	253 V AC
Functional Safety		
SIL	3	3
Auxiliary Power		
Auxiliary power	24 V DC	24 V DC

Technical Data

Variant	9275/10-21-25-11s	9275/10-24-48-11s
Auxiliary Power		
Nominal current	50 mA	90 mA
Power consumption	1.2 W	2.16 W
Polarity reversal protection	Yes	Yes
Input		
Input voltage for ON	15 – 30 V	15 – 30 V
Input voltage for OFF	0 – 5 V	0 – 5 V
Output		
Switching capacity fault message contact	30 V / 50 mA	30 V / 50 mA
Ambient Conditions		
Ambient temperature	-20 °C ... +60 °C	-20 °C ... +60 °C
Storage temperature	-40 °C ... +80 °C	-40 °C ... +80 °C
Mounting / Installation		
Mounting type	NS35/15, NS35/7.5 DIN rail	NS35/15, NS35/7.5 DIN rail

Accessories

Figure	Description	Art. No.	Listprice €	PS	Weight kg
Supply modul					
	Redundant supply of 24 V DC auxiliary power (with fuse) and reading the collective error message for 92xx series ISpac modules which support this function. Connection screw terminal	268183▲	120.40	29	0.135
pac-Bus					
	Wiring for power supply and common error messaging	262928▲	9.40	29	0.006

Dimensional Drawings (All Dimensions in mm [inches]) – Subject to Alterations

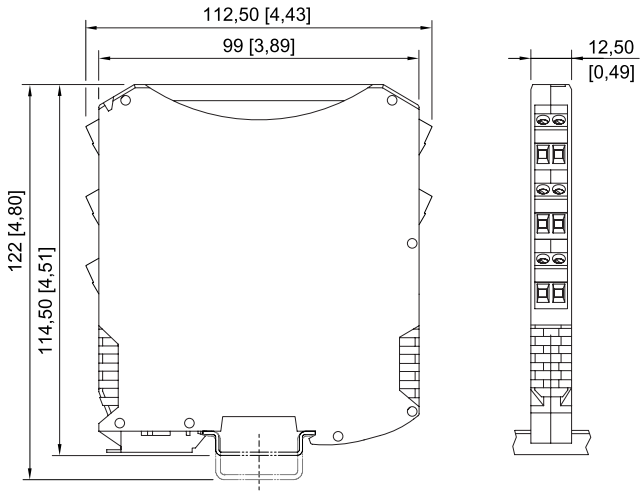

ISpac Series 9260, 9265, 9270, 9275, 9276, 9282 with screw terminal

▲ Preferred products – in stock or available at short notice

Digital Output Loop Powered
Series 9176



- Comprehensive portfolio to cater for all characteristics
- Dual-channel versions reduce the required footprint
- Can be used up to SIL 3 (IEC/EN 61508)

WebCode 9176A

9176 series binary outputs issue binary signals for the operation of intrinsically safe solenoid valves, indicators or horns. The devices do not require a separate auxiliary power supply as they are powered by the control circuit. The intrinsically safe outputs are galvanically separated from the inputs. The dual-channel versions are characterized by galvanically separated channels.

	IECEx / ATEX					
Zone	0	1	2	20	21	22
Ex interface	•	•	•	•	•	•
Installation in			•			

	NEC 500 CEC Appendix J					
	Class I		Class II		Class III	
Division	1	2	1	2	1	2
Ex interface	•	•	•	•	•	•
Installation in		•				

	CEC Section 18					
	NEC® 505 Class I			NEC® 506		
Zone	0	1	2	20	21	22
Ex interface	•	•	•			
Installation in			•			

Selection Table

Number of channels 1							
Output open-circuit voltage U_a	Max. output current $I_{a\ max}$	Internal Resistance R_i	Product Type	Art. No.	Listprice €	PS	Weight kg
25 V	35 mA	250 Ω	9176/10-16-00s	222182▲	179.90	21	0.170
Number of channels 2							
Output open-circuit voltage U_a	Max. output current $I_{a\ max}$	Internal Resistance R_i	Product Type	Art. No.	Listprice €	PS	Weight kg
25 V	29 mA / 58 mA*	320 Ω / 160 Ω*	9176/20-15-00s	222180▲	269.00	21	0.185
	35 mA / 70 mA*	250 Ω / 125 Ω*	9176/20-16-00s	222184▲	269.00	21	0.185

* Parallel connection of the outputs possible; thus, doubling the output current.

The order numbers listed in the table are for devices equipped with screw terminals.
Further versions on the Internet r-stahl.com.

Technical Data

Variant	9176/20-15-00s	9176/.0-16-00s
Explosion Protection		
IECEx gas explosion protection	Ex nA [ia Ga] IIC T4 Gc	Ex nA [ia Ga] IIC T4 Gc
IECEx dust explosion protection	[Ex ia Da] IIIC	[Ex ia Da] IIIC
ATEX gas explosion protection	Ⓔx II 3 (1) G Ex nA [ia Ga] IIC T4 Gc	Ⓔx II 3 (1) G Ex nA [ia Ga] IIC T4 Gc
ATEX dust explosion protection	Ⓔx II (1) D [Ex ia Da] IIIC	Ⓔx II (1) D [Ex ia Da] IIIC
EAC gas explosion protection	2 Ex nA [ia Ga] IIC T4 Gc X	2 Ex nA [ia Ga] IIC T4 Gc X

Technical Data		
Variant	**9176/20-15-00s**	**9176/.0-16-00s**
Explosion Protection		
EAC dust explosion protection	[Ex ia Da] IIIC	[Ex ia Da] IIIC
Certificates	ATEX (BVS), Brazil (ULB), Canada (FM), EAC (ENDCE), IECEx (BVS), India (PESO), Korea (KTL), SIL (exida), USA (FM)	ATEX (BVS), Brazil (ULB), Canada (FM), EAC (ENDCE), IECEx (BVS), India (PESO), Korea (KTL), SIL (exida), USA (FM)
Ship approval	CCS, EU RO MR	CCS, EU RO MR
Safety Data		
Maximum voltage U_o	27.6 V	27.6 V
Max. current I_o (Ex ia)	86.5 mA	110 mA
Max. current I_o (Ex ib)	44 mA	50 mA
Maximum power P_o	596 mW	760 mW
Safety-related maximum voltage	253 V	253 V
Functional Safety		
SIL	3	3
Auxiliary Power		
Auxiliary power	Without	Without
Input		
Input voltage for ON	18 – 31.2 V	18 – 31.2 V
Input voltage for OFF	0 – 5 V	0 – 5 V
Output		
Notes	Output characteristics, see data sheet on the Internet r-stahl.com	
Ambient Conditions		
Ambient temperature	-20 °C ... +70 °C (Single device) -20 °C ... +60 °C (Group assembly)	-20 °C ... +70 °C (Single device) -20 °C ... +60 °C (Group assembly)
Storage temperature	-40 °C ... +80 °C	-40 °C ... +80 °C
Mounting / Installation		
Mounting type	NS35/15, NS35/7.5 DIN rail	NS35/15, NS35/7.5 DIN rail

Dimensional Drawings (All Dimensions in mm [inches]) – Subject to Alterations

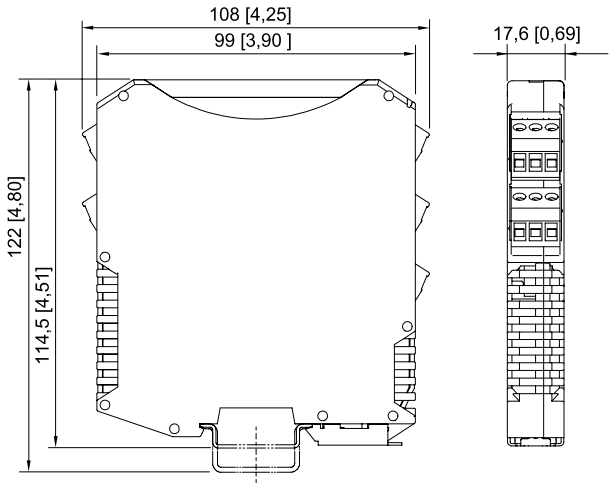

ISpac Series 9146, 9147, 9160, 9162, 9163, 9165, 9167, 9170, 9172, 9175, 9176, 9180, 9182, 9193, ISbus Series 9412 with screw terminal

Digital Output Loop Powered

Series 9276 Slim Design 12.5 mm Wide



- A comprehensive portfolio for a wide range of solenoid valves
- Space savings due to a slim design – 12.5 mm wide
- Can be used for functional safety levels up to SIL 3 (IEC/EN 61508)

WebCode 9276A

Series 9276 digital outputs issue signals for the operation of intrinsically safe solenoid valves, indicator lamps or horns. The devices do not require a separate auxiliary power supply as they are powered by the control circuit. The intrinsically safe outputs are galvanically separated from the inputs.

	IECEx / ATEX					
Zone	0	1	2	20	21	22
Ex interface	•	•	•	•	•	•
Installation in			•			

	NEC 500 CEC Appendix J					
	Class I		Class II		Class III	
Division	1	2	1	2	1	2
Ex interface	•	•	•	•	•	•
Installation in		•				

	CEC Section 18					
	NEC® 505 Class I			NEC® 506		
Zone	0	1	2	20	21	22
Ex interface	•	•	•			
Installation in			•			

Selection Table

Number of channels: 1

Maximum voltage U_o	Output open-circuit voltage U_a	Max. output current $I_{a\,max}$	Max. current I_o (Ex ia)	Maximum power P_o	Output internal resistance R_i	Product Type	Art. No.	Listprice €	PS	Weight kg
25.1 V	21.9 V	25 mA	39 mA	245 mW	641.1 Ω	9276/10-21-25-00s	261440▲	179.90	21	0.165
		40 mA	87 mA	550 mW	287 Ω	9276/10-21-40-00s	261441▲	179.90	21	0.165
		58 mA	188 mA	1180 mW	133.4 Ω	9276/10-21-60-00s	261443▲	179.90	21	0.165
27.7 V	24 V	48 mA	101 mA	697 mW	275.5 Ω	9276/10-24-48-00s	261442▲	179.90	21	0.165

Technical Data

Variant	9276/10-21-25-00s, 9276/10-21-40-00s, 9276/10-24-48-00s	9276/10-21-60-00s
Explosion Protection		
IECEx gas explosion protection	Ex nA [ia Ga] IIC T4 Gc	Ex nA [ia IIB Ga] IIC T4 Gc
IECEx dust explosion protection	[Ex ia Da] IIIC	[Ex ia Da] IIIC
ATEX gas explosion protection	Ⓔx II 3 (1) G Ex nA [ia Ga] IIC T4 Gc	Ⓔx II 3 (1) G Ex nA [ia IIB Ga] IIC T4 Gc
ATEX dust explosion protection	Ⓔx II (1) D [Ex ia Da] IIIC	Ⓔx II (1) D [Ex ia Da] IIIC
Certificates	ATEX (IBE), Canada / USA (UL), IECEx (IBE), SIL (exida)	ATEX (IBE), Canada / USA (UL), IECEx (IBE), SIL (exida)
Ship approval	DNV GL	DNV GL
Safety Data		
Safety-related maximum voltage	253 V AC	253 V AC

Technical Data

Variant	9276/10-21-25-00s, 9276/10-21-40-00s, 9276/10-24-48-00s	9276/10-21-60-00s
Functional Safety		
SIL	3	3
Auxiliary Power		
Auxiliary power	Without	Without
Input		
Input voltage for ON	15 – 30 V	15 – 30 V
Input voltage for OFF	0 – 5 V	0 – 5 V
Ambient Conditions		
Ambient temperature	-40 °C ... +60 °C	-40 °C ... +60 °C
Storage temperature	-40 °C ... +80 °C	-40 °C ... +80 °C
Mounting / Installation		
Mounting type	NS35/15, NS35/7.5 DIN rail	NS35/15, NS35/7.5 DIN rail

Accessories

Figure	Description	Art. No.	Listprice €	PS	Weight kg
Supply modul					
	Redundant supply of 24 V DC auxiliary power (with fuse) and reading the collective error message for 92xx series ISpac modules which support this function. Connection screw terminal	268183▲	120.40	29	0.135
pac-Bus					
	Wiring for power supply and common error messaging	262928▲	9.40	29	0.006

Dimensional Drawings (All Dimensions in mm [inches]) – Subject to Alterations

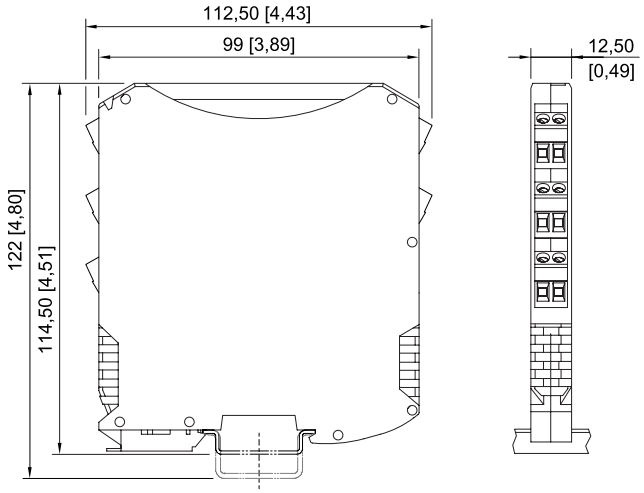

ISpac Series 9260, 9265, 9270, 9275, 9276, 9282 with screw terminal

▲ Preferred products – in stock or available at short notice

Resistance Isolator
Series 9180



- Resistance isolator for inrinsically safe Pt100 or Pt1000
- World's only two-channel device requiring just 8.8 mm of space per channel
- For two-, three- and four-wire connection

WebCode 9180A

9180 series resistance isolators can be used for the intrinsically safe operation of Pt100 or Pt1000 resistance temperature detectors. The resistance measured at the input is transmitted to the output and can thereby be measured by an I/O card. The auxiliary power, output and intrinsically safe input are galvanically separated.

	IECEx / ATEX					
Zone	0	1	2	20	21	22
Ex interface	•	•	•	•	•	•
Installation in			•			

	NEC 500 CEC Appendix J					
	Class I		Class II		Class III	
Division	1	2	1	2	1	2
Ex interface	•	•	•	•	•	•
Installation in		•				

	CEC Section 18 NEC® 505			NEC® 506		
	Class I					
Zone	0	1	2	20	21	22
Ex interface	•	•	•			
Installation in			•			

Selection Table

Number of channels	1						
Measuring range	Medium resolution input	Input for resistance temperature detector	Product Type	Art. No.	Listprice €	PS	Weight kg
18 ... 391 Ω	0.01 Ω	Pt 100	9180/10-77-11s	160491▲	316.50	21	0.160
Number of channels	2						
Measuring range	Medium resolution input	Input for resistance temperature detector	Product Type	Art. No.	Listprice €	PS	Weight kg
18 ... 391 Ω	0.01 Ω	Pt 100	9180/20-77-11s	160494▲	453.80	21	0.180

The order numbers listed in the table are for devices equipped with screw terminals.
Further versions on the Internet r-stahl.com.

Technical Data

Explosion Protection	
IECEx gas explosion protection	Ex nA nC [ia Ga] IIC T4 Gc
IECEx dust explosion protection	[Ex ia Da] IIIC
ATEX gas explosion protection	Ⓔx II 3 (1) G Ex nA nC [ia Ga] IIC T4 Gc
ATEX dust explosion protection	Ⓔx II (1) D [Ex ia Da] IIIC
EAC gas explosion protection	Ex 2 Ex nA nC [ia Ga] IIC T4 Gc X
EAC dust explosion protection	Ex [Ex ia Da] IIIC
Certificates	ATEX (BVS), Brazil (ULB), Canada (FM), EAC (ENDCE), IECEx (BVS), India (PESO), Korea (KTL), Russia (Meteorological certificate), USA (FM)
Notes	CCC certificate available from 2021 onward
Ship approval	CCS, EU RO MR

Technical Data	
Safety Data	
Maximum voltage U_o	6.5 V
Maximum current I_o	16.4 mA
Maximum power P_o	27 mW
Safety-related maximum voltage	253 V
Auxiliary Power	
Auxiliary power	24 V DC
Input	
Line fault and loss of power signalisation	- Contact (30 V / 100 mA) closed to ground in case of fault - pac-Bus, floating contact (30 V / 100 mA)
Output	
Output signal	Equal to input signal (resistor)
Settling time output	< 10 ms
Response time output	< 1 s
Ambient Conditions	
Ambient temperature	-20 °C ... +70 °C (Single device) -20 °C ... +60 °C (Group assembly)
Storage temperature	-40 °C ... +80 °C
Mounting / Installation	
Mounting type	NS35/15, NS35/7.5 DIN rail

Dimensional Drawings (All Dimensions in mm [inches]) – Subject to Alterations

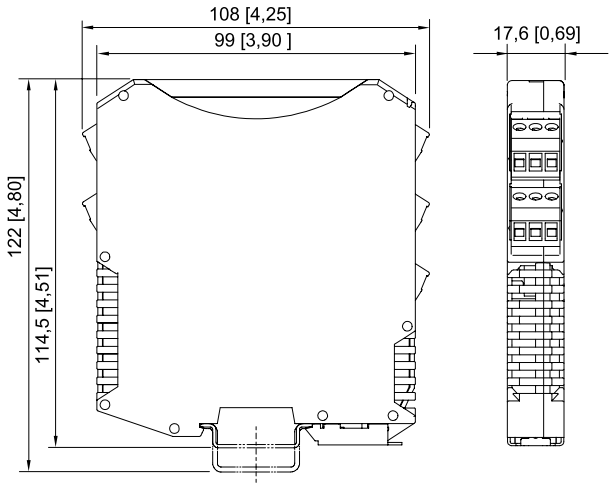

ISpac Series 9146, 9147, 9160, 9162, 9163, 9165, 9167, 9170, 9172, 9175, 9176, 9180, 9182, 9193,
ISbus Series 9412 with screw terminal



- Ttemperature transmitter, can be configured for virtually any common sensor type
- Broad range, including variants with signal conversion and trip amplifier function
- Can be used up to SIL 2 (IEC/EN 61508)

WebCode 9182A

9182 series temperature transmitters for field circuits can be used to connect temperature sensors and potentiometers. They are easy to configure for virtually any sensor type by means of software or a DIP switch. These sensor types include Pt100 sensors, thermocouples and potentiometers. Variants with a trip amplifier function allow the input signal to be analyzed using two independent electronic contacts.

	IECEx / ATEX					
Zone	0	1	2	20	21	22
Ex interface	•	•	•	•	•	•
Installation in			•			

	NEC 500 CEC Appendix J					
	Class I		Class II		Class III	
Division	1	2	1	2	1	2
Ex interface	•	•	•	•	•	•
Installation in		•				

	CEC Section 18					
	NEC® 505 Class I			NEC® 506		
Zone	0	1	2	20	21	22
Ex interface	•	•	•			
Installation in			•			

Selection Table

Output		0/4 ... 20 mA active / source						
Number of channels	Limit contact (per channel)	Load resistance R_L max.	SIL	Product Type	Art. No.	Listprice €	PS	Weight kg
1	2 NO / NC	750 Ω	2	9182/10-51-14s	201682▲	465.40	21	0.170
	Without	750 Ω	–	9182/10-51-11s	160546▲	371.80	21	0.195
2	Without	600 Ω	–	9182/20-51-11s	160541▲	551.40	21	0.195

Signal duplication due to parallel connection of inputs (dual-channel version 9182/2). Further information see operating instruction.

The order numbers listed in the table are for devices equipped with screw terminals.
Further versions on the Internet r-stahl.com.

Technical Data

Explosion Protection	
IECEx gas explosion protection	Ex nA nC [ia Ga] IIC T4 Gc
IECEx dust explosion protection	[Ex ia Da] IIIC
ATEX gas explosion protection	Ⓔx II 3 (1) G Ex nA nC [ia Ga] IIC T4 Gc
ATEX dust explosion protection	Ⓔx II (1) D [Ex ia Da] IIIC
EAC gas explosion protection	Ex 2 Ex nA nC [ia Ga] IIC T4 Gc X
EAC dust explosion protection	Ex [Ex ia Da] IIIC
Certificates	ATEX (BVS), Brazil (ULB), Canada (FM), EAC (ENDCE), IECEx (BVS), India (PESO), Korea (KTL), Russia (Meteorological certificate), SIL (exida), USA (FM), USA (UL)
Ship approval	CCS, EU RO MR

Technical Data	
Safety Data	
Maximum voltage U_o	6.5 V
Maximum current I_o	19.7 mA
Maximum power P_o	32 mW
Safety-related maximum voltage	253 V
Auxiliary Power	
Auxiliary power	24 V DC
Input	
Input potentiometer	up to 100 kΩ
Input resistance temperature detector (RTD)	Types Pt 100, Pt 500, Pt 1000, Ni 100, Ni 500, Ni 1000
Input resistance temperature detector (RTD) Connection type	2-, 3-, 4-wire circuit
Input thermocouple	Types B, E, J, K, N, R, S, T, L, U, XK
Line fault and loss of power signalisation	- Contact (30 V / 100 mA) closed to ground in case of fault - pac-Bus, floating contact (30 V / 100 mA)
Ambient Conditions	
Ambient temperature	-20 °C ... +70 °C (Single device) -20 °C ... +60 °C (Group assembly)
Storage temperature	-40 °C ... +80 °C
Mounting / Installation	
Mounting type	NS35/15, NS35/7.5 DIN rail

Accessories

Figure	Description	Art. No.	Listprice €	PS	Weight kg
External reference junction					
	External reference junction for 2 x thermocouple (1 x Pt100 for 2, 3 or 4 wire connection) integrated into the 4-pole terminal block. Installation takes place on the DIN rail.	160675	34.10	Z2	0.030
	External reference junction for 1 x thermocouple (Pt100 in 2 wire connection) integrated into the pluggable terminal (3-pole). Installation takes place in the ISpac device instead of the standard terminal.	160676	36.30	Z2	0.030

A3

Dimensional Drawings (All Dimensions in mm [inches]) – Subject to Alterations

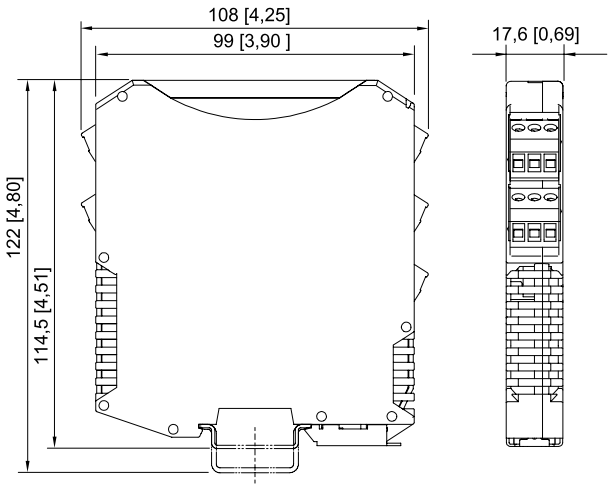

ISpac Series 9146, 9147, 9160, 9162, 9163, 9165, 9167, 9170, 9172, 9175, 9176, 9180, 9182, 9193,
ISbus Series 9412 with screw terminal

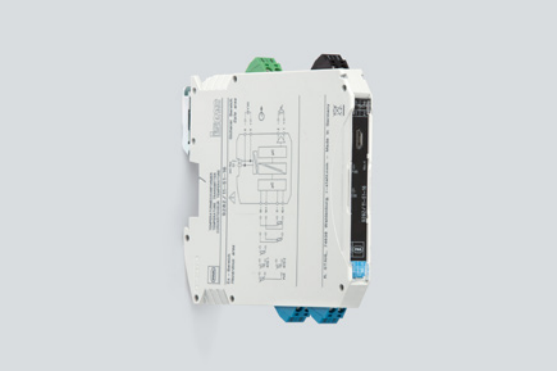

- Ex i temperature transmitter, can be configured for virtually any common sensor type
- Space savings due to a slim design – 12.5 mm wide
- Can be used up to SIL 2 (IEC/EN 61508)

WebCode 9282A

9282 series temperature transmitters for field circuits can be used to connect temperature sensors or potentiometers (seprate versions). The devices are easy to configure for virtually any sensor type by means of software. These sensor types include Pt100 sensors, thermocouples and potentiometers. These devices feature three-way galvanic separation.

	IECEx / ATEX					
Zone	0	1	2	20	21	22
Ex interface	•	•	•	•	•	•
Installation in			•			

	NEC 500 CEC Appendix J					
	Class I		Class II		Class III	
Division	1	2	1	2	1	2
Ex interface	•	•	•	•	•	•
Installation in		•				

	CEC Section 18					
	NEC® 505 Class I			NEC® 506		
Zone	0	1	2	20	21	22
Ex interface	•	•	•			
Installation in			•			

Selection Table

Number of channels	1				
Signal type	Product Type	Art. No.	Listprice €	PS	Weight kg
RTD, potentiometer	9282/11-51-16s	261452▲	323.00	21	0.170
Thermocouple, mV-source	9282/12-51-16s	261453▲	323.00	21	0.175

In the scope of delivery of 9282/12-51-16, a Pt100 is included as cold junction compensation, for mounting on the terminal.
Alternatively, cold junction compensation 9191/VS-04 is also available (see accessories and spare parts section).

The order numbers listed in the table are for devices equipped with screw terminals. Further versions on the Internet r-stahl.com.

Parameterisation adapter (software is readily available to download online at r-stahl.com, WebCode: 9282A)

Technical Data

Variant	9282/11-51-16s	9282/12-51-16s
Explosion Protection		
IECEx gas explosion protection	Ex ec ic [ia Ga] IIC T4 Gc	Ex ec ic [ia Ga] IIC T4 Gc
IECEx dust explosion protection	[Ex ia Da] IIIC	[Ex ia Da] IIIC
IECEx firedamp protection	Ex [Ex ia Ma] I	Ex [Ex ia Ma] I
ATEX gas explosion protection	⟨Ex⟩ II 3 (1) G Ex ec ic [ia Ga] IIC T4 Gc	⟨Ex⟩ II 3 (1) G Ex ec ic [ia Ga] IIC T4 Gc
ATEX dust explosion protection	⟨Ex⟩ II (1) D [Ex ia Da] IIIC	⟨Ex⟩ II (1) D [Ex ia Da] IIIC
ATEX firedamp protection	⟨Ex⟩ I (M1) Ex [Ex ia Ma] I	⟨Ex⟩ I (M1) Ex [Ex ia Ma] I
Certificates	ATEX (IBE), IECEx (IBE)	ATEX (IBE), IECEx (IBE)
Ship approval	DNV GL	DNV GL

Temperature Transmitter
Series 9282 Slim Design 12.5 mm Wide

Technical Data		
Variant	**9282/11-51-16s**	**9282/12-51-16s**
Safety Data		
Maximum voltage U_o	6 V	6 V
Maximum current I_o	16.8 mA	16.8 mA
Maximum power P_o	25.2 mW	25.2 mW
Safety-related maximum voltage	253 V	253 V
Functional Safety		
SIL	2	2
Auxiliary Power		
Auxiliary power	24 V DC	24 V DC
Input		
Input thermocouple	—	J, K, E, R, S, T, B, N (IEC 584), C, D (ASTM), U, L (DIN 43710), L, A1, A2, A3, M (GOST 8.585)
Input resistance temperature detector (RTD)	Pt 50 , Pt 100 , Pt 200 , Pt 500 , Pt 100S , Pt 500S , Ni 100 , Ni 500 , Cu 50 , Cu 53	—
Input resistance temperature detector (RTD) Connection type	2-, 3-, 4-wire connection	—
Input potentiometer	up to 50 kΩ	—
Output		
Output	0/4 ... 20 mA active / source	0/4 ... 20 mA active / source
Load resistance R_L max.	600 Ω	600 Ω
Ambient Conditions		
Ambient temperature	-40 °C ... +70 °C	-40 °C ... +70 °C
Storage temperature	-40 °C ... +80 °C	-40 °C ... +80 °C
Mounting / Installation		
Mounting type	NS35/15, NS35/7.5 DIN rail	NS35/15, NS35/7.5 DIN rail

Accessories

Figure	Description	Art. No.	Listprice €	PS	Weight kg
External reference junction					
	External reference junction for 2 x thermocouple (1 x Pt100 for 2, 3 or 4 wire connection) integrated into the 4-pole terminal block. Installation takes place on the DIN rail.	160675	34.10	Z2	0.030
Parameterisation adapter					
	Used for parameterisation and diagnostics on 9282 series ISpac isolators. Interface to PC: USB Scope of delivery: Adapter and cable (software is available to download online at r-stahl.com, WebCode: 9282A)	261507	178.90	Z2	0.160

Dimensional Drawings (All Dimensions in mm [inches]) – Subject to Alterations

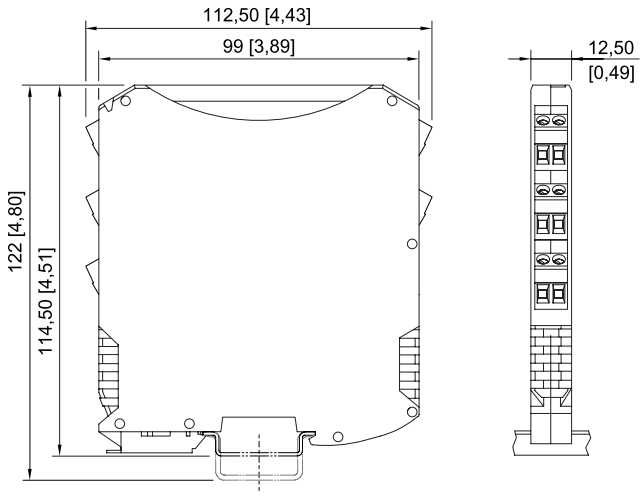

ISpac Series 9260, 9265, 9270, 9275, 9276,
9282 with screw terminal



- Multiplexers for HART field devices with 32 channels
- Simple application: HART Mux master and HART Mux slave in one device
- Can be used up to SIL 3

WebCode 9192A

The 9192 series HART multiplexer can connect up to 32 HART-capable field devices, such as transmitters or control valves, to asset management systems via RS-485 bus. The HART multiplexer is the ideal solution if you want to operate asset management systems and distributed control systems from different manufacturers in parallel or for enabling HART communication when using a PLC.

	IECEx / ATEX					
Zone	0	1	2	20	21	22
Installation in			•			

	NEC 500 CEC Appendix J					
	Class I		Class II		Class III	
Division	1	2	1	2	1	2
Installation in		•				

	CEC Section 18					
	NEC® 505 Class I			NEC® 506		
Zone	0	1	2	20	21	22
Installation in			•			

Selection Table				
Product Description	HART multiplexer ISpac			
Product Type	Art. No.	Listprice €	PS	Weight kg
9192/32-10-10	160695	995.80	21	0.100

- incl. 14-core connection cable for pac-Carrier Series 9195 or HART connection board Series 9196

- CommDTM available, download under the given WebCode 9192A

Technical Data	
Explosion Protection	
IECEx gas explosion protection	Ex ec IIC T4 Gc
ATEX gas explosion protection	II 3 G Ex ec IIC T4 Gc
EAC gas explosion protection	2 Ex nA IIC T4 Gc X
Certificates	ATEX (BVS), Brazil (ULB), Canada (FM), EAC (ENDCE), IECEx (BVS), India (PESO), SIL (exida), USA (FM)
Ship approval	CCS, EU RO MR
Electrical Data	
Connection RS485 Interface	Sub-D socket, 9-pole
Protocol RS-485 Interface	Compatible with Cornerstone Occupational safety & health management system PDM PRM FDM
HART-multiplexer RS-485 interface	Max. 31 (per bus segment)
Number of RS-485 interfaces	1

Technical Data

Electrical Data	
Number of channels field device interface (HART)	16 or 32, setting via switch
Connection field device interface (HART)	Ribbon cable, 14-pole (included)
Signal field device interface (HART)	HART FSK
Specification field device interface (HART)	HART Field Communication Protocol Rev. 7.x (downwards compatible to Rev. 4.0); FSK Physical Layer Specification (Rev. 7.x)
Auxiliary Power	
Auxiliary power	24 V DC
Ambient Conditions	
Ambient temperature	-20 °C ... +70 °C (Single device) -20 °C ... +60 °C (Group assembly)
Storage temperature	-40 °C ... +80 °C
Mounting / Installation	
Mounting type	NS35/15, NS35/7.5 DIN rail

Accessories

Figure	Description	Art. No.	Listprice €	PS	Weight kg
HART Termination Board					
	The compact HART 9196/16H-XXO-03c termination board enables connection of the field device wiring to the automation system wiring.	160891	151.90	29	0.150
	The HART 9196/16H-XXO-05c termination board enables separate connection of the field device wiring to the automation system wiring.	249297	219.20	29	0.520

Dimensional Drawings (All Dimensions in mm [inches]) – Subject to Alterations

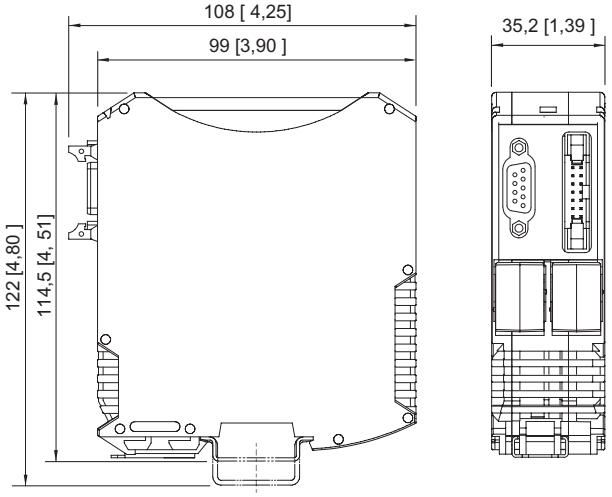



- Redundant supply for increased availability
- DIP switch makes adjusting operating statuses easy
- Can be used for ISpac Series 91xx and 92xx

WebCode **9193A**

The 9193 series supply module supplies the pac-bus with auxiliary power and reads any line fault messages or auxiliary power failures for all of the ISpac devices installed on the pac-Bus. The supply current of up to 4 A is sufficient for approximately 30-50 modules. Power can be supplied using a single or redundant system. The device is provided with an interchangeable fuse.

	IECEx / ATEX					
Zone	0	1	2	20	21	22
Installation in			•			

Selection Table

Product Description	Supply module ISpac				
Supply	Product Type	Art. No.	Listprice €	PS	Weight kg
24 V / 4 A, primary + redundant	9193/21-11-11s	268183 ▲	120.40	29	0.135

The order numbers listed in the table are for devices equipped with screw terminals.
Further versions on the Internet r-stahl.com

Technical Data

Explosion Protection	
IECEx gas explosion protection	Ex ec nC IIC T4 Gc
ATEX gas explosion protection	Ⓔx II 3 G Ex ec nC IIC T4 Gc
Certificates	ATEX (BVS), EAC (ENDCE), IECEx (BVS)
Ship approval	CCS
Auxiliary Power	
Auxiliary power	24 V DC
Auxiliary power voltage range	18 ... 31.2 V
Output	
Output	24 V / max. 4 A, supply via pac-Bus
Collective error message	35 V / 100 mA relay contact
Ambient Conditions	
Ambient temperature	-40 °C ... +70 °C (Single device) -40 °C ... +55 °C (Group assembly)
Storage temperature	-40 °C ... +80 °C

Technical Data

Mounting / Installation	
Mounting type	NS35/15, NS35/7.5 DIN rail

Dimensional Drawings (All Dimensions in mm [inches]) – Subject to Alterations

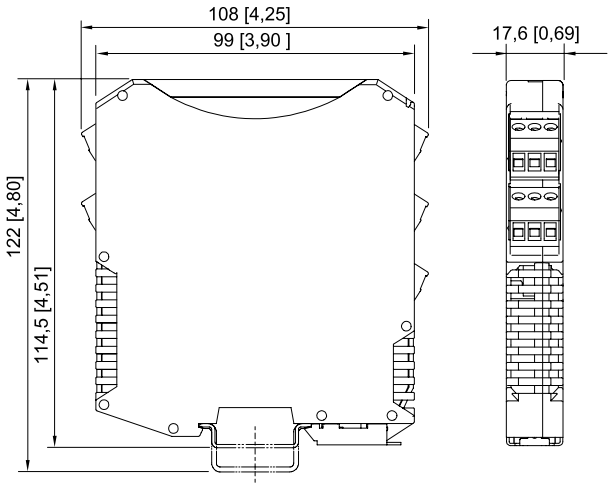

ISpac Series 9146, 9147, 9160, 9162, 9163, 9165, 9167, 9170, 9172, 9175, 9176, 9180, 9182, 9193,
ISbus Series 9412 with screw terminal

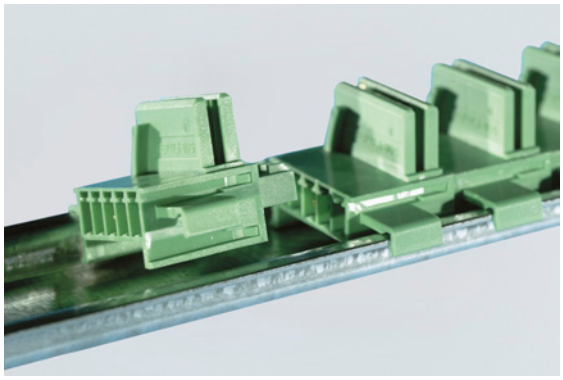

- Reduces wiring effort for ISpac modules
- Can be installed on standard DIN rail without tools by simply snapping into place – can be expanded at any time
- Suitable for industrial environments subject to vibration

WebCode **9194A**

The 9194 series pac-Bus supplies 30 to 50 ISpac devices of the 91xx series per pac-Bus segment with auxiliary power and receives error messages from these devices via a zero-potential contact. It is quick and easy to install on high- or low-profile DIN rail without the need for tools, and can be expanded at any time. The system is mechanically very robust, making it perfect for industrial environments.
The pac-Bus 9194/31-17 can be combined with pac-Bus 9294/31-12.

	IECEx / ATEX					
Zone	0	1	2	20	21	22
Installation in			•			

	NEC 500 CEC Appendix J					
	Class I		Class II		Class III	
Division	1	2	1	2	1	2
Installation in		•				

Selection Table

Figure	Description	Grid dimension	Product Type	Art. No.	Listprice €	PS	Weight kg
Product Description	pac-Bus single element ISpac						
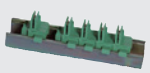	Wiring auxiliary power and collective error message	17.6 mm	9194/31-17	160731 ▲	7.90	21	0.004
Product Description	pac-Bus terminal set ISpac						
Figure	Description	Grid dimension	Product Type	Art. No.	Listprice €	PS	Weight kg
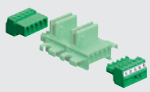	For the supply of 24 V DC auxiliary power via terminals (alternative to using the supply module 9193/21-11-11), with jumper for error message chain for ISpac module 91xx	–	9194/50-01	160730 ▲	10.20	21	0.008

Technical Data

Explosion Protection	
IECEx gas explosion protection	Ex ec IIC T4 Gc
ATEX gas explosion protection	Ⓔx II 3 G Ex ec IIC T4 Gc
EAC gas explosion protection	2 Ex nA IIC T4 Gc X
Certificates	ATEX (BVS), Brazil (ULB), Canada (FM), EAC (ENDCE), IECEx (BVS), India (PESO), USA (FM)
Ship approval	CCS, EU RO MR
Electrical Data	
Connections	using pac-Bus terminal set 9194/50-01 or supply module 9193/21-11-11.

Technical Data

Mounting / Installation	
Mounting type	NS35/15, NS35/7.5 DIN rail
Mounting position	Horizontal Vertical

Dimensional Drawings (All Dimensions in mm [inches]) – Subject to Alterations

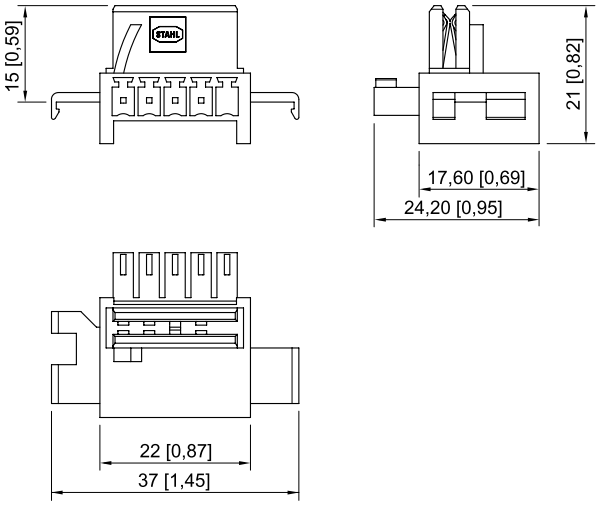

Series 9194

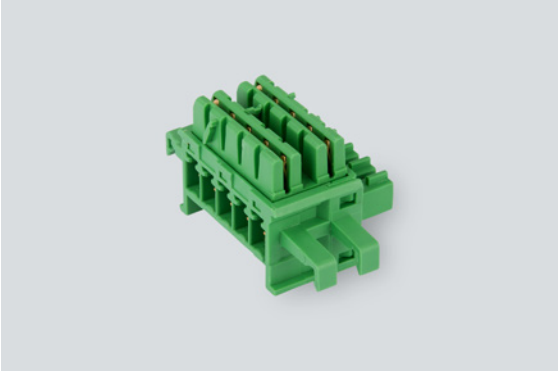

- ISpac devices are quick to wire, reducing costs
- Can be installed on standard DIN rail without tools by simply snapping into place – can be expanded at any time
- Suitable for industrial environments subject to vibration

WebCode **9294A**

The pac-Bus 9294/31-12 supplies 30 to 50 ISpac devices of series 92xx. The auxiliary power can be fed into the pac-Bus segment via the terminal set 9194/50-01. The supply module 9193/21-11-11 can alternatively be used for a redundant supply and for reading out the collective error message. The pac-Bus can be clipped onto DIN rails NS 35/15 and NS35/7.5. The pac-Bus 9294/31-12 can be combined with pac-Bus 9194/31-17.

	IECEx / ATEX					
Zone	0	1	2	20	21	22
Installation in			•			

Selection Table

Product Description		pac-Bus single element ISpac					
Figure	Description	Grid dimension	Product Type	Art. No.	Listprice €	PS	Weight kg
	Wiring for power supply and common error messaging	12.5 mm	9294/31-12	262928 ▲	9.40	29	0.006

Technical Data

Explosion Protection	
IECEx gas explosion protection	Ex ec IIC T4 Gc
ATEX gas explosion protection	Ⓔx II 3 G Ex ec IIC T4 Gc
Certificates	ATEX (BVS), EAC (ENDCE), IECEx (BVS)
Ship approval	CCS
Electrical Data	
Connections	using pac-Bus terminal set 9194/50-01 or supply module 9193/21-11-11.
Mounting / Installation	
Mounting position	Horizontal Vertical
Mounting type	NS35/15, NS35/7.5 DIN rail

Dimensional Drawings (All Dimensions in mm [inches]) – Subject to Alterations

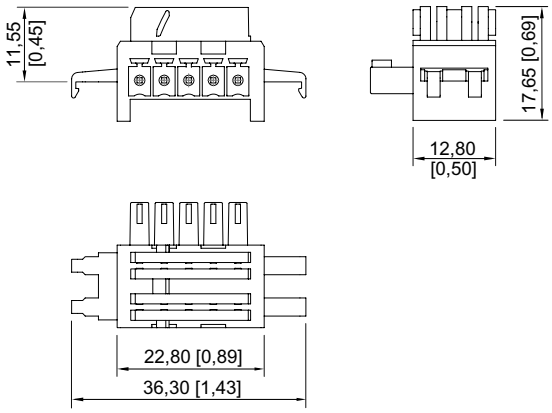

Series 9294

HART Termination Board
Series 9196

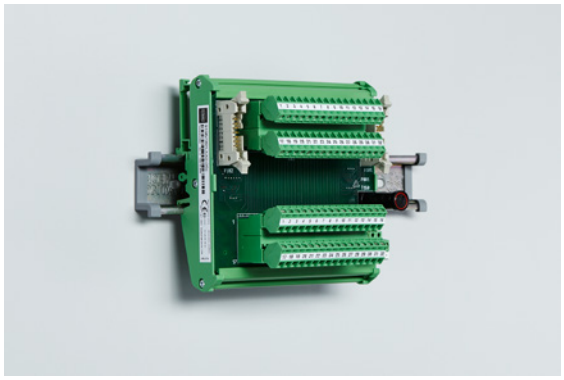

- Cost- and space-saving system for HART communication
- Different variants available with or without signal conversion
- Easy to install on DIN rail

WebCode 9196A

Used in combination with the HART multiplexer (9192), the 9196 series HART termination board enables the transmission of data using the HART protocol between field devices and an asset management system. The boards are very easy to install on DIN rail and can process 4 to 20 mA signals with HART FSK. If Ex i separation is necessary, this will require separate Ex i isolators.

	IECEx / ATEX					
Zone	0	1	2	20	21	22
Installation in			•			

	NEC 500 CEC Appendix J					
	Class I		Class II		Class III	
Division	1	2	1	2	1	2
Installation in		•				

	CEC Section 18					
	NEC® 505 Class I			NEC® 506		
Zone	0	1	2	20	21	22
Installation in			•			

Selection Table					
Connection isolators / Non-Ex field devices	via pluggable terminal; connected to the field device in parallel / automation system; in or output				
Terminal	Product Type	Art. No.	Listprice €	PS	Weight kg
One terminal for field and control system side, detachable	9196/16H-XX0-03c	160891	151.90	29	0.150
Connection isolators / Non-Ex field devices Connection automation system	via pluggable terminal; connected to the field device in parallel / automation system; in or output via integrated screw terminal				
Terminal	Product Type	Art. No.	Listprice €	PS	Weight kg
One terminal for field side, one terminal for control system side, detachable	9196/16H-XX0-05c	249297	219.20	29	0.520

32 channels if two HART termination boards Series 9196 are connected to HART multiplexer Series 9192.

Technical Data	
Explosion Protection	
IECEx gas explosion protection	Ex ec IIC T4 Gc
ATEX gas explosion protection	II 3 G Ex ec IIC T4 Gc
EAC gas explosion protection	2 Ex nA IIC T4 Gc X
Certificates	ATEX (BVS), Brazil (ULB), Canada (FM), EAC (ENDCE), IECEx (BVS), India (PESO), SIL (exida), USA (FM)
Ship approval	CCS, EU RO MR
Auxiliary Power	
Auxiliary power	24 V DC
Ambient Conditions	
Ambient temperature	-20 °C ... +70 °C
Storage temperature	-40 °C ... +80 °C

Technical Data

Mounting / Installation	
Mounting type	DIN rail or wall mounting

Dimensional Drawings (All Dimensions in mm [inches]) – Subject to Alterations

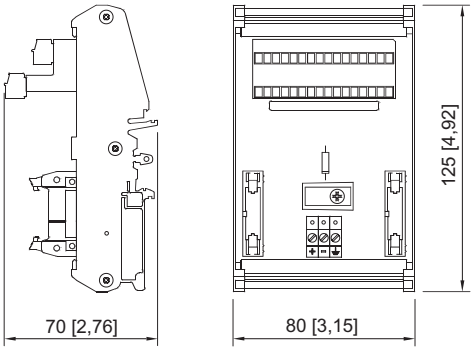

HART Termination board Type 9196/16H-XX0-03c

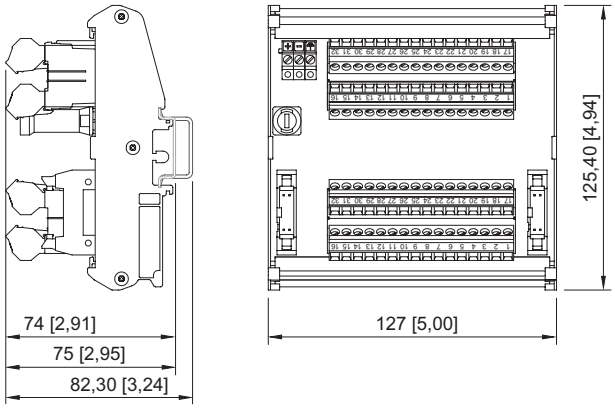

HART Termination board Type 9196/16H-XX0-05c



REMOTE I/O

Product	Installation in Zone						Series	Page	WebCode
	0	1	2	20	21	22			
Analog Modules									
Analog Universal Module HART for Zone 1 / Div. 1		•	•				9468/32	88	9468A
Analog Universal Module HART for Zone 2 / Div. 2			•				9468/33	91	9468B
Universal Module HART Zone 2 / Div. 2 Ex n			•				9469/35	94	9469A
CPU & Power Modules									
CPU & Power Module for Zone 1 / Div. 1 - I.S.		•	•				9440/22	70	9440A
CPU Module for Zone 2 / Div. 2			•				9442/35	74	9442A
Ethernet CPU Module for Zone 1 / Div. 1		•	•				9441/12	81	9441A
Ethernet Power Module for Zone 1 / Div. 1		•	•				9444/12	85	9444A
Power Module for Zone 2 / Div. 2			•				9445/35	78	9445A
Digital Input Output Modules									
Digital Input Output Module 24 V for Zone 2 / Div. 2 Ex n			•				9472/35	107	9472A
Digital Input Output Module for Zone 1 / Div. 1		•	•				9470/32	98	9470C
Digital Input Output Module for Zone 2 / Div. 2			•				9470/33	101	9470D
Digital Input Output Module NAMUR for Zone 2 / Div. 2 Ex n			•				9471/35	104	9471B
Digital Output Modules									
Digital Output Module 8-Channel Version for Zone 1 / Div. 1		•	•				9475/32-08	110	9475C
Digital Output Module 8-Channel Version for Zone 2 / Div. 2			•				9475/33-08	113	9475D
Digital Output Module Valve for Zone 1 / Div. 1		•	•				9478	116	9478A
Enclosures for Fieldstations									
Standard Enclosure Zone 1 for Remote I/O		•					8150	130	8150D
Standard Enclosure Zone 2 for Remote I/O			•				7145	133	7145F
General									
General								69	
Overview of Functions IS1+								68	
Overview of the System Components								68	

Product	Installation in Zone						Series	Page	WebCode
	0	1	2	20	21	22			
System Components and Accessories									
BusRail		•	•				9494	127	9494A
Termination Board NEW			•				9491	125	9491A
Temperature Input Modules									
Temperature Input Module for Zone 1 / Div. 1		•	•				9482/32	118	9482A
Temperature Input Module for Zone 2 / Div. 2			•				9482/33	121	9482B

For additional products and information please refer to r-stahl.com

Overview of the System Components

Overview of the System Components

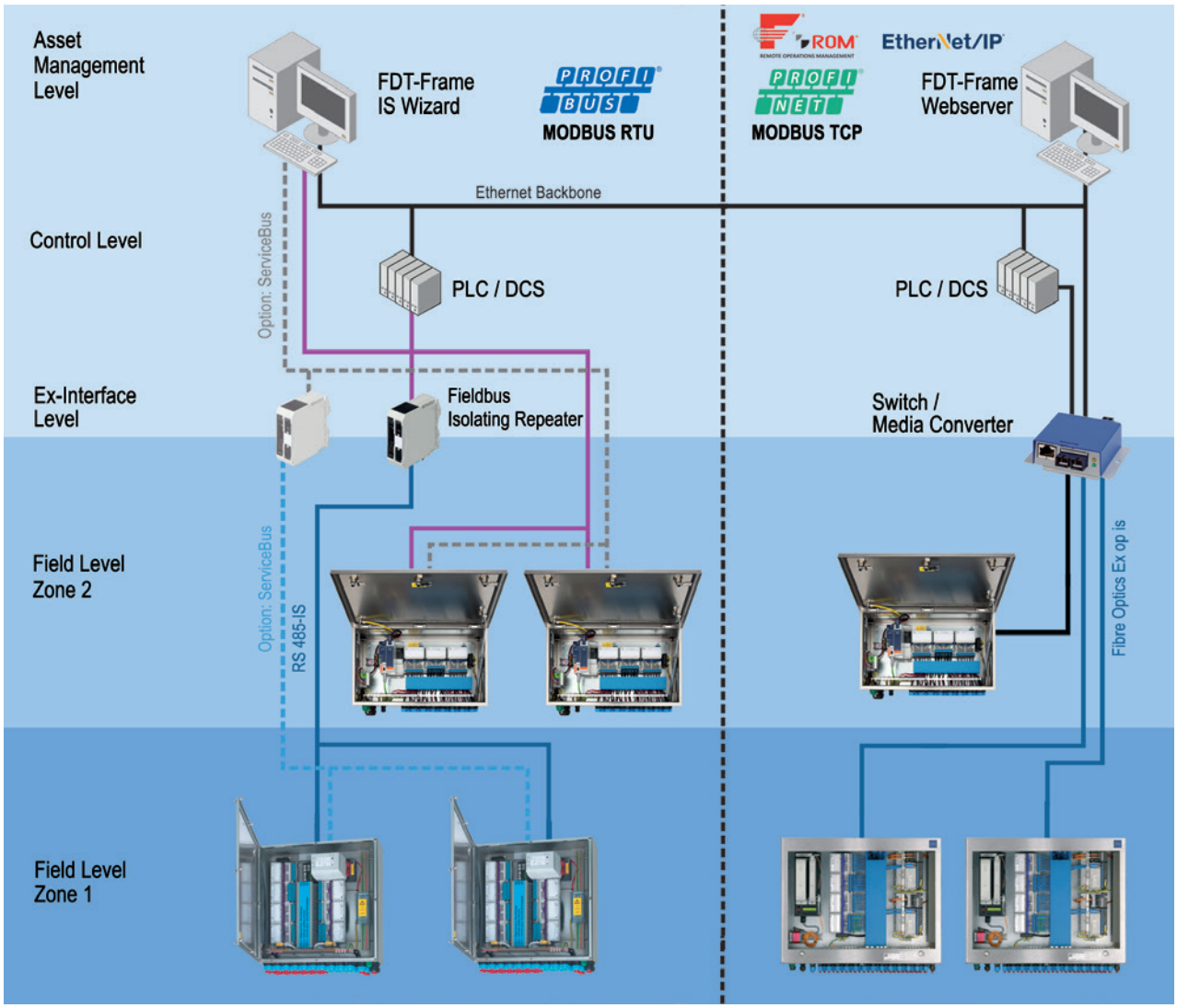

Overview of Functions IS1+

	Installation in Zone 2	Installation in Zone 1	RS485-IS	100BASE-TX	LWL ex op is	ServiceBus IS Wizard	ServiceBus DTM	Webserver	COM/Device/ Gateway DTM	HART support	Redundancy
PROFIBUS DP	x	x	x [1]		x	x	x		x	x	x
Modbus RTU	x	x	x [1]		x	x	x		x	x	x
PROFINET	x	x		x	x	x		x		x	x
Modbus TCP	x	x		x	x	x		x	x	x	x
EtherNet/IP™	x	x		x	x	x		x	x	x	x

[1] when installed in Zone 1 only; in Zone 2: RS485



- Inputs and outputs for intrinsically safe (Ex i) and non-intrinsically safe (Ex e/d/q) field devices
- Communication via PROFIBUS DP, Modbus RTU+TCP, PROFINET and EtherNet/IP™
- Hot swap for all modules in Zone and Zone 2
- System redundancy and media redundancy
- Option ServiceBus for diagnostics and integration into Asset-Management systems
- DTM technology for full access to all system and HART field device information
- Field enclosures in many versions available, freely configurable

IS1+ is exceptionally easy: communication and power modules are installed on a DIN rail together with the different input/output modules. The system's internal, intrinsically safe power supply and data communication is via the bus rail, which is snapped into the DIN rail. The unique power supply concept which was developed specially for hazardous areas makes planning as easy as for normal industrial I/O systems. Plug & Play without separate engineering tools.

IS1 is particularly flexible: it can be used for small and large signal volumes, intrinsically safe and non-safe signals and installation in hazardous areas of Zone 1 and 2 or Division 1 and 2.Intrinsically safe fieldbuses with copper or fibre optic technology and 100 Mbps Ethernet and various redundancy structures combine the field stations with all conventional automation systems. Modern standard technologies such as completely transparent HART transmission and FDT/DTM are supported throughout.

IS1+ is extremely cost-efficient: modules with up to 16 channels, partly free for parameterization as input or output, ensure a low signal price. Special modules optimised for Zone 2 / Div. 2 installation allow for additional cost reduction. High performance interfaces, e.g. with DTM support, and the integrated diagnostic functions according to NAMUR NE107, allow easy integration of the system into asset management and engineering systems and thus help to significantly reduce costs for operation, troubleshooting and maintenance.

IS1+ is truly universal: the application options are versatile, IS1 can be used effectively in virtually all applications. No matter whether for installation according to ATEX, IECEx, NEC or elsewhere in the world, on land, offshore platforms or in shipbuilding - IS1 offers the broadest spectrum of certificates and approvals.
A temperature range of -40 to +75 °C is ideal for the most extreme requirements. Add to this, our competence in system solutions with over 30 years of experience for making your bespoke solution from universal remote I/O.

CPU & Power Module for Zone 1 / Div. 1 - I.S.

Series 9440/22



- Suitable for I.S. PROFIBUS DP V0/V1 HART, Modbus RTU
- Supporting system redundancy and optical rings
- CPM in Zone 1 and Class I, Div. 1 can be hot swapped
- Integration in plant asset management systems via ServiceBus and FDT/DTM
- Integrated I.S. power supply for up to 8 I/O modules

WebCode 9440A

Modbus RTU

9440/22 series CPU & power modules (CPM) for Zone 1 and Class I, Div. 1 are used for the intrinsically safe supply of power to up to eight IS1+ I/O modules and to field circuits. Intrinsically safe RS485-IS with PROFIBUS DP or Modbus RTU is used for communicating with the automation system. These CPMs support system and optical rings and can be replaced while the system is in operation (i.e. hot swapped) in Zone 1/Class I, Div. 1.

A DTM and process bus or service bus are used for asset management integration.

	IECEx / ATEX					
Zone	0	1	2	20	21	22
Ex interface	•	•	•		•	•
Installation in		•	•			

	NEC 500 CEC Appendix J					
	Class I		Class II		Class III	
Division	1	2	1	2	1	2
Ex interface	•	•	•	•	•	•
Installation in	•	•				

	CEC Section 18					
	NEC® 505 Class I			NEC® 506		
Zone	0	1	2	20	21	22
Ex interface	•	•	•			
Installation in		•	•			

Selection Table

Installation		Zone 1 / Division 1					
Nominal voltage	Protocols	Redundancy	Product Type	Art. No.	Listprice €	PS	Weight kg
24 V DC	Profibus DP V0 Profibus DP V1 Profibus DP V1 HART	full redundancy	9440/22-01-11-C1243	162218▲	1378.00	22	2.963
120 V / 230 V AC	Profibus DP V0 Profibus DP V1 Profibus DP V1 HART	full redundancy	9440/22-01-21-C1243	162211▲	1612.00	22	2.963

Please order the 9490 socket (see accessories) separately.

Technical Data

Variant	24 V DC	120 V / 230 V AC
Explosion Protection		
IECEx gas explosion protection	Ex d [ia] [ib] IIC T4 Gb	Ex d [ia] [ib] IIC T4 Gb
ATEX gas explosion protection	II 2 G Ex d [ia] [ib] IIC T4 Gb	II 2 G Ex d [ia] [ib] IIC T4 Gb
EAC gas explosion protection	1 Ex d [ia Ga] [ib] IIC T4 Gb X	1 Ex d [ia Ga] [ib] IIC T4 Gb X
Certificates	ATEX (DEK), Brazil (ULB), Canada (CSA), Canada (FM), EAC (STV), IECEx (DEK), Korea (KTL), USA (FM)	ATEX (DEK), Brazil (ULB), Canada (CSA), Canada (FM), EAC (STV), IECEx (DEK), Korea (KTL), USA (FM)
Notes	CCC certificate available from 2021 onward	CCC certificate available from 2021 onward
Ship approval	EU RO MR	EU RO MR

Technical Data

Variant	24 V DC	120 V / 230 V AC
Electrical Data		
Transmission distance/rate for copper RS485	1200 m at 9.6...93,75 kbit/s 1000 m at 187.5 kbit/s 400 m at 500 kbit/s 200 m at 1.5 Mbit/s	1200 m at 9.6...93,75 kbit/s 1000 m at 187.5 kbit/s 400 m at 500 kbit/s 200 m at 1.5 Mbit/s
Connection Fieldbus RS485	Sub-D socket 9-pole	Sub-D socket 9-pole
Connection ServiceBus RS485	Sub-D socket 9-pole	Sub-D socket 9-pole
Auxiliary Power		
Auxiliary power voltage range	20 ... 35 V DC	90 ... 253 V AC
Current consumption (without I/O modules)	0.21 A at 24 V DC	Approx. 25 mA at 230 V AC Approx. 48 mA at 120 V AC
Current consumption (with 8 I/O modules)	Approx. 2.5 A at 24 V DC	Approx. 0.4 A at 230 V AC Approx. 0.8 A at 120 V AC
Power dissipation (without I/O modules)	5 W	8.4 W
Power dissipation (per I/O module)	1.4 W	1 W
Ambient Conditions		
Ambient temperature	-20°C ... +65°C	-20°C ... +65°C
Mechanical Data		
Degree of protection IP (IEC 60529)	IP20 connections IP30 modules	IP20 connections IP30 modules
Width	96.5 mm	96.5 mm
Depth	170 mm	170 mm

Accessories

Figure	Description	Art. No.	Listprice €	PS	Weight kg
Series 9490/11 - Socket for CPU and Power Module					
	Zone 1 connection by means of Ex e terminals 24 V DC, 120 / 230 V AC	162707 ▲	280.00	22	0.482
Series 9490/13 - Socket for CPU and Power Module					
	Zone 1, connection via pig tail 24 V DC, 120 / 230 V AC	162711	553.00	22	0.900
Series 9490/12 - Socket for CPU and Power Module					
	Division 1, connection via conduit 24 V DC, 120 / 230 V AC	162715	890.00	22	0.900
SUB-D socket					
	9-pin for connection of the fieldbus or ServiceBus to the CPU & power module Series 9440/22 and fieldbus-isolating repeater 9185. Integrated terminator can be switched on or off. For RS 485 IS to PNO standard.	162693 ▲	61.70	Z2	0.100
Optical Fieldbus Isolating Repeater, Zone 2 / Div. 2					
	Isolating repeater for installation in Zone 2 / Div. 2 For fieldbus via fibre optic intrinsically safe cables “ex op is” into Zone 1 / Div. 1 Optical ring possible Extensive diagnostic function and fault-contact Suitable for Profibus DP up to 1.5 MBit/s Further versions and information see data sheet of Series 9186 optical fieldbus-isolating repeater	160624	952.70	25	0.244

CPU & Power Module for Zone 1 / Div. 1 - I.S.

Series 9440/22

Accessories

Figure	Description	Art. No.	Listprice €	PS	Weight kg
Fieldbus Isolating Repeater Series 9185/11					
	Equipment for installation in safe areas or Zone 2/Div. 2 For fieldbuses with RS-485-IS-interface - Zone 1 / Class I, II, III Division 1 and Class I, II, III Zone 1 Suitable for PROFIBUS DP, Modbus, R. STAHL service bus RS-232, RS-422, RS-485 interface with the automation system Transmission rate automatically set with PROFIBUS DP Adjustable transmission rate (1.2 kBit/s to 1.5 MBit/s) 24 V AC/DC auxiliary power For further information, see data sheet for 9185/11	227598▲	1108.20	21	0.350
Device DTM IS1 Series 9499					
	- Parametrisation and configuration of the IS1+ system - Communication with HART-compatible field devices - Support for all common FDT frame applications (e.g. FieldCare, PactWare™) - Condition monitoring - Scan function for automatic topology generation - Download from r- stahl.com	–	–	–	–
	9499/DTM-IS1-02 Com/Device/HART 30 Free-of-charge software licence for up to 30 HART devices	251237	–	27	–
	9499/DTM-IS1-04 Com/Device/HART 300 Software licence for up to 300 HART devices	251239	379.00	27	–
	9499/DTM-IS1-06 Com/Device/HART unltd. Software licence for an unlimited number of HART devices	251240	1097.00	27	–

Dimensional Drawings (All Dimensions in mm [inches]) – Subject to Alterations

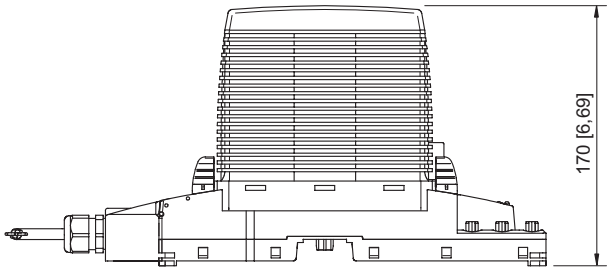

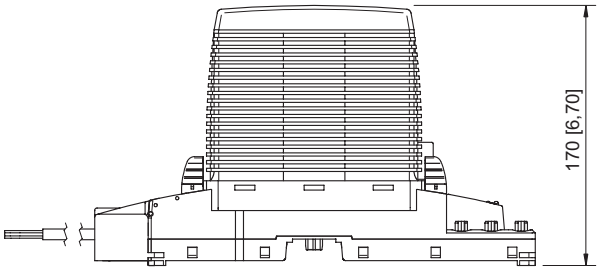

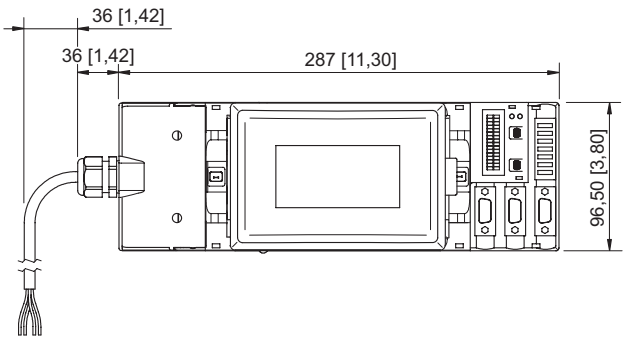

CPU & Power Module for Zone 1 with connection by means of a pig tail

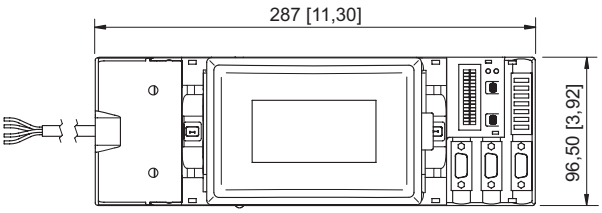

CPU & Power Module for Division 1 with connection by means of a conduit

▲ Preferred products – in stock or available at short notice

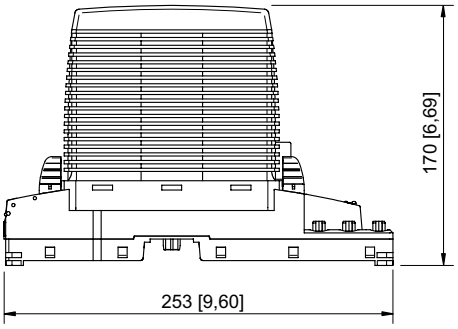

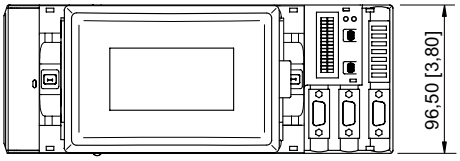

CPU & Power Module for Zone 1 with connection by means of Ex e terminals

CPU Module for Zone 2 / Div. 2

Series 9442/35



- Support for PROFIBUS DP, PROFINET, Modbus TCP and EtherNet/IP™; incl. HART transmission and redundancy
- RS485 interfaces (max. 12 Mbit/s) and Ethernet (max. 100 Mbit/s)
- Comprehensive diagnostics based on NE 107
- Support of FDT/DTM and web server for integration in asset management systems
- Enhanced ambient temperature range from -40 °C to +75 °C (-40 °F to +167 °F)

WebCode 9442A

Modbus TCP EtherNet/IP

The 9442/35 CPU module functions as a gateway between the IS1+ Remote I/O system and the automation system. All supported communication protocols are in the CPU module and can be configured by the user. In addition to the process values, other information such as diagnostics, parameterisation and configuration is transmitted over the CPU module. Communication with the I/O modules is implemented via the 9496 socket and the 9494 BusRail. Integration in control systems and plant asset management tools is implemented using standards such as GSD, EDS, web servers and FDT/DTM.

	IECEx / ATEX					
Zone	0	1	2	20	21	22
Ex interface			•			
Installation in			•			

	NEC 500 CEC Appendix J					
	Class I		Class II		Class III	
Division	1	2	1	2	1	2
Ex interface		•				
Installation in		•				

	CEC Section 18					
	NEC® 505 Class I			NEC® 506		
Zone	0	1	2	20	21	22
Ex interface			•			
Installation in			•			

Selection Table

Installation		Zone 2				
Protocol RS-485 Interface	Protocols RJ45	Protocols USB	Product Type	Art. No.	Listprice €	PS
Profibus DP V0 Profibus DP V1 HART	MODBUS TCP EtherNet/IP PROFINET	Service Bus	9442/35-10-00	246854▲	633.00	22

Please order the 9445/35 power module and 9496/35 base (see accessories) separately.

Technical Data

Explosion Protection	
IECEx gas explosion protection	Ex ec ia [ia Ga] IIC T4 Gc
ATEX gas explosion protection	Ⓔx II 3 (1) G Ex ec ia [ia Ga] IIC T4 Gc
EAC gas explosion protection	Ex 2 Ex e ia [ia Ga] IIC T4 Gc X Ex 2 Ex nA ia [ia Ga] IIC T4 Gc X
Certificates	ATEX (PTB), Canada (FM), EAC (Sertium), IECEx (PTB), USA (FM)
Notes	CCC certificate available from 2021 onward
Electrical Data	
Connection RS485 Interface	Sub-D plug, 9-pole
Interface RS485	acc. to Profibus specification
Protocol RS-485 Interface	Profibus DP V0 Profibus DP V1 HART

Technical Data

Electrical Data	
Connection Ethernet Interface	2x RJ45 connector
Interface RJ45	100BASE-TX unmanaged switch function
Protocols RJ45	MODBUS TCP EtherNet/IP PROFINET
USB interface	Type A socket
Version USB	USB 2.0
Protocols USB	Service Bus
Auxiliary Power	
Power supply	via socket 9496 a. PM 9445/35
Current consumption max.	0.3 A
Power dissipation max.	5 W
Ambient Conditions	
Ambient temperature	-40°C ... +65°C (without mounting plate) -40°C ... +70°C with 3 mm mounting plate sheet steel) -40°C ... +75°C (with 6 mm mounting plate aluminium)
Mechanical Data	
Degree of protection IP (IEC 60529)	IP30

Accessories

Figure	Description	Art. No.	Listprice €	PS	Weight kg
Series 9496/35 - Socket for CPU & Power Module					
	Zone 2 simplex, 3 slots for mounting / installing 1 x CPU and 2 x power module or 2 x CPU und 1 x power module Dimensions: approx. L = 167 mm, W = 96 mm, H = 50.6 mm	246871▲	215.00	22	0.400
	Zone 2 redundant, 4 slots for mounting / installing 2 x CPU and 2 x power module Dimensions: approx. L = 167 mm, W = 152 mm, H = 50.6 mm	262392	273.00	22	0.600
Fieldbus Isolating Repeater Series 9185/12					
	Equipment for installation in safe areas or Zone 2 / Div. 2 For fieldbuses with RS-485 interface. Suitable for PROFIBUS DP, Modbus, R. STAHL service bus. RS-232, RS-422, RS-485 interface with the automation system Transmission rate automatically set with PROFIBUS DP Adjustable transmission rate (1.2 kbit/s to 1.5 Mbit/s) 24 V AC/DC auxiliary power For further information, see data sheet for 9185/12 series	227600▲	695.30	21	0.350
Optical Fieldbus Isolating Repeater, Zone 2 / Div. 2					
	Isolating repeater for installation in Zone 2 / Div. 2 For fieldbus via fibre optic intrinsically safe cables “ex op is” into Zone 1 / Div. 1 Optical ring possible Extensive diagnostic function and fault-contact Suitable for Profibus DP up to 1.5 MBit/s Further versions and information see data sheet of Series 9186 optical fieldbus-isolating repeater	160624	952.70	25	0.244
Media converter FX op is / TX SC for Zone 2					
	Media Converter of 10/100 Base-Tx (1 x RJ45 port) to 100 Base-Fx “Ex op is” (1 x FO port SC); Multi mode (up to 4 km range); Webcode: 9721A	220381▲	322.00	75	0.240

▲ Preferred products – in stock or available at short notice

CPU Module for Zone 2 / Div. 2
Series 9442/35

Accessories

Figure	Description	Art. No.	Listprice €	PS	Weight kg
Unmanaged Switch FX op is / TX SC					
	Unmanaged Switch FX op is to TX; SC plug connector FO cable 4 multi mode (MM), 2 RJ45, Installation in Zone 2	243427▲	1494.00	75	0.500
Device DTM IS1 Series 9499					
	- Parametrisation and configuration of the IS1+ system - Communication with HART-compatible field devices - Support for all common FDT frame applications (e.g. FieldCare, PactWare™) - Condition monitoring - Scan function for automatic topology generation - Download from r- stahl.com	–	–	–	–
	9499/DTM-IS1-02 Com/Device/HART 30 Free-of-charge software licence for up to 30 HART devices	251237	–	27	–
	9499/DTM-IS1-04 Com/Device/HART 300 Software licence for up to 300 HART devices	251239	379.00	27	–
	9499/DTM-IS1-06 Com/Device/HART unltd. Software licence for an unlimited number of HART devices	251240	1097.00	27	–
USB Converter					
	USB RS485 converter for installation in Zone 2. Noise insensitive, bidirectional conversion of USB data to RS485 serial data with power supply via USB port. Can be used for various applications, e.g. for missing RS485 interfaces to PCs. For further information, see data sheet for Series 9787 - Webcode 9787A	266011	264.00	75	0.170
USB Cable					
	Cable type: USB 2.0 5-pole with shielding Connector plug: USB type A / USB type A Temperature range: -40 °C ... +85 °C Cable colour: black Length: 2.5 m	268119	103.00	Z2	–
Sub-D plug + PG interface					
	9-pin for connection of the fieldbus or ServiceBus to the CPU & power module Series 9440/15 and fieldbus-isolating repeater 9185. Integrated terminator can be switched on or off. For non-intrinsically safe RS-485.	105715▲	48.90	Z2	0.001

Dimensional Drawings (All Dimensions in mm [inches]) – Subject to Alterations

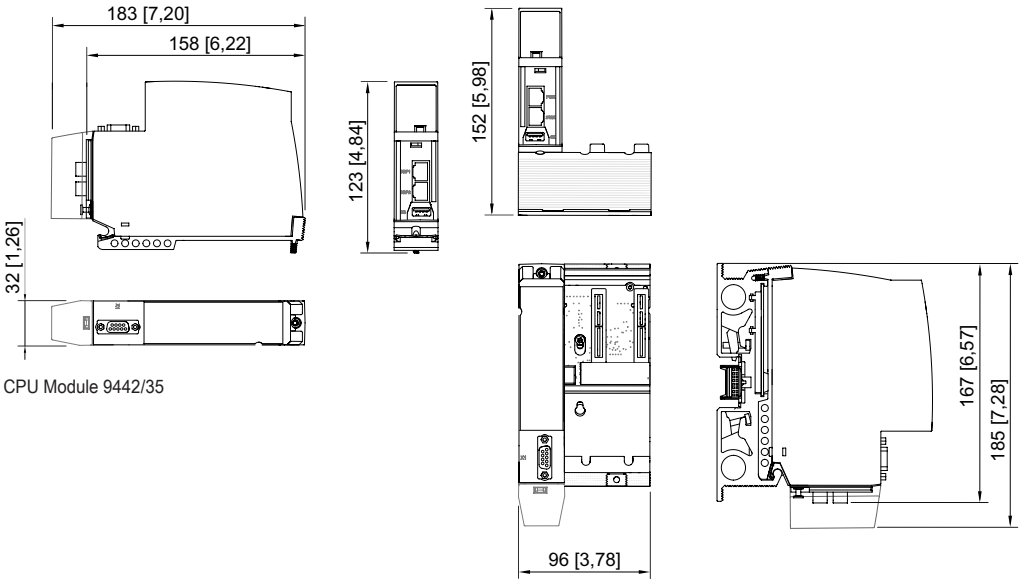

CPU Module 9442/35

CPU Module 9442/35 + Base 9496/35-03-00

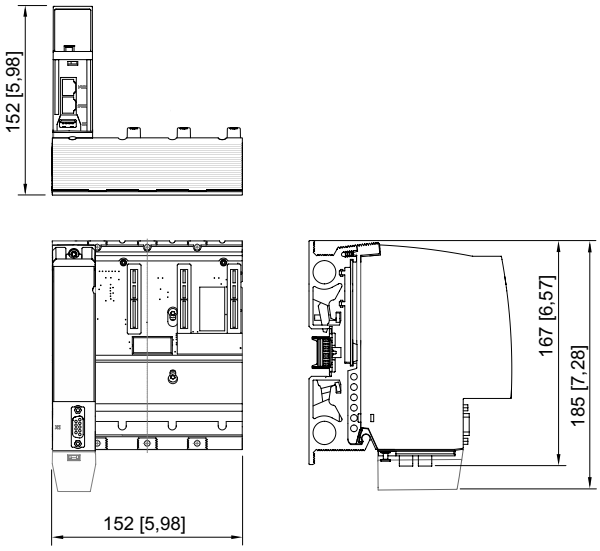

CPU Module 9442/35 + Base 9496/35-04-00

Power Module for Zone 2 / Div. 2

Series 9445/35



- 24 V DC supply module for IS1+ CPU modules and 16 I/O modules
- Redundancy of the power module with load sharing possible
- Integrated polarity reversal protection
- Error messages in accordance with NE 107 (overload, excess temperature, maintenance requirements)
- Support of FDT/DTM and Webserver for integration in asset management systems
- Extended ambient temperature range -40 °C to +75 °C (-40 °F to +167 °F)

WebCode **9445A**

The 9445/35 power module is used for intrinsically safe power supply to the 9442/35 CPU and up to 16 I/O modules. The auxiliary power connection is established using an extendable terminal with open cable end (accessories). Up to two 9445/35 power modules can be connected to a 9496/35 base to provide a redundant power supply for the 9442/35 CPU and the I/O modules. The 9445/35 power module monitors itself and reports notifications to the control system and asset management systems when there is an overload, the ambient temperatures are too high or the end of the service life has been reached

	IECEx / ATEX					
Zone	0	1	2	20	21	22
Ex interface			•			
Installation in			•			

	NEC 500 CEC Appendix J					
	Class I		Class II		Class III	
Division	1	2	1	2	1	2
Ex interface		•				
Installation in		•				

	CEC Section 18 NEC® 505 Class I			NEC® 506		
Zone	0	1	2	20	21	22
Ex interface			•			
Installation in			•			

Selection Table

Installation	Zone 2			
Auxiliary power nominal voltage	Product Type	Art. No.	Listprice €	PS
24 V DC	9445/35-12	257290▲	507.00	22

Please order the 9442/35 CPU, 9496/35 base and 24 V auxiliary power set (see accessories) separately.

Technical Data

Explosion Protection	
IECEx gas explosion protection	Ex ec [ia Ga, ib Gb] IIC T4 Gc
ATEX gas explosion protection	Ⓔx II 3 (1,2) G Ex ec [ia Ga, ib Gb] IIC T4 Gc
EAC gas explosion protection	Ex 2 Ex e [ia Ga] [ib Gb] IIC T4 Gc X Ex 2 Ex nA ia [ia Ga] [ib Gb]IIC T4 Gc X
Certificates	ATEX (PTB), Canada (FM), EAC (Sertium), IECEx (PTB), USA (FM)
Notes	CCC certificate available from 2021 onward
Auxiliary Power	
Auxiliary power voltage range	19 ... 32 V DC
Polarity reversal protection	Yes
Auxiliary power	Connection: 2-pole via a pluggable terminal with a 3 m single core
Redundancy	Yes (by using two power modules)

Technical Data

Ambient Conditions	
Ambient temperature	-40°C ... +65°C (without mounting plate) -40°C ... +70°C with 3 mm mounting plate sheet steel) -40°C ... +75°C (with 6 mm mounting plate aluminium)
Mechanical Data	
Degree of protection IP (IEC 60529)	IP30

Accessories

Figure	Description	Art. No.	Listprice €	PS	Weight kg
Connection set					
	Power supply set 24 V (3 m)	261232▲	37.00	Z2	0.100
Series 9496/35 - Socket for CPU & Power Module					
	Zone 2 simplex, 3 slots for mounting / installing 1 x CPU and 2 x power module or 2 x CPU und 1 x power module Dimensions: approx. L = 167 mm, W = 96 mm, H = 50.6 mm	246871▲	215.00	22	0.400
	Zone 2 redundant, 4 slots for mounting / installing 2 x CPU and 2 x power module Dimensions: approx. L = 167 mm, W = 152 mm, H = 50.6 mm	262392	273.00	22	0.600

Dimensional Drawings (All Dimensions in mm [inches]) – Subject to Alterations

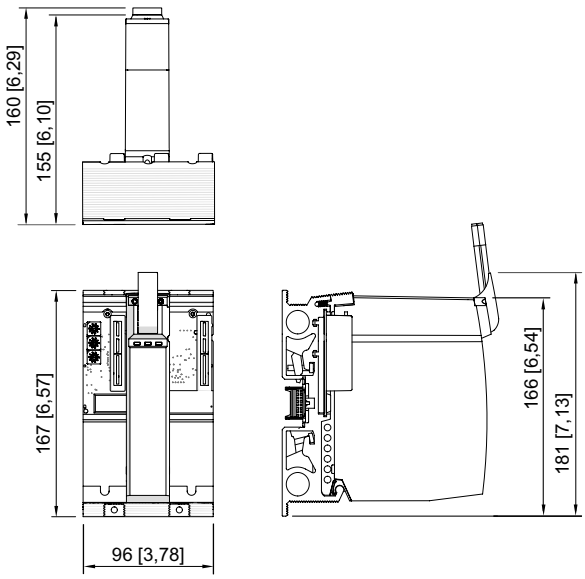

Power Module 9445/35 with base 9496/35-03-00

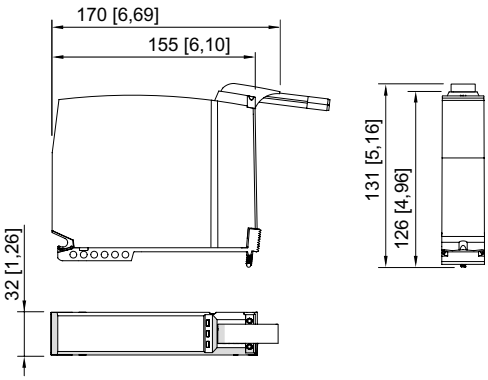

Power Module 9445/35

▲ Preferred products – in stock or available at short notice

A4

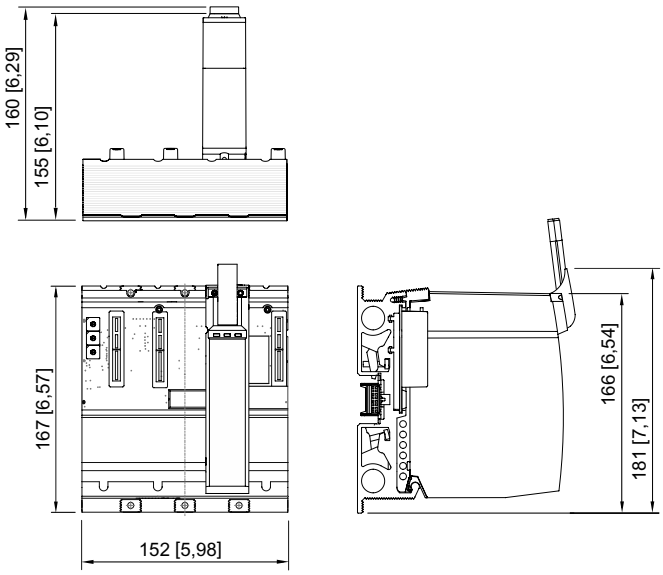

Power Module 9445/35 with base 9496/35-04-00



- Suitable for “op is” 100 Mbit/s Ethernet with PROFINET, Modbus TCP or EtherNet/IP™
- Redundant operation with Modbus TCP possible
- CPU can be hot swapped in Zone 1 and Class I, Div. 1

WebCode 9441A

PROFINET Modbus TCP EtherNet/IP HART

The 9441/12 series CPU for Zone 1 and Class I, Div. 1 is used to communicate with the automation system via PROFINET, Modbus TCP or EtherNet/IP™. The connection is established by means of an optically inherently safe “op is” fibre optic, which can be connected and disconnected in Zone 1 and Class I, Div.1 IS1+ and connected HART devices are integrated into asset management systems using a DTM.

	IECEx / ATEX					
Zone	0	1	2	20	21	22
Ex interface	•	•	•	•	•	•
Installation in		•	•			

	NEC 500 CEC Appendix J					
	Class I		Class II		Class III	
Division	1	2	1	2	1	2
Ex interface	•	•	•	•	•	•
Installation in	•	•				

	CEC Section 18 NEC® 505			NEC® 506		
	Class I					
Zone	0	1	2	20	21	22
Ex interface	•	•	•			
Installation in		•	•			

Selection Table					
Installation	Zone 1 / Division 1				
Protocols	Product Type	Art. No.	Listprice €	PS	Weight kg
EtherNet/IP Modbus TCP PROFINET	9441/12-00-00	211045 ▲	1015.00	22	1.300

Please order the 9444/12 power module and base 9492/12 (see accessories) separately.

Technical Data	
Explosion Protection	
IECEx gas explosion protection	Ex d [ia Ga] [op is T6 Ga] IIC T4 Gb
IECEx dust explosion protection	[Ex ia Da] [Ex op is Da] IIIC
ATEX gas explosion protection	Ⓔx II 2 (1) G Ex d [ia Ga] [op is T6 Ga] IIC T4 Gb
ATEX dust explosion protection	Ⓔx II (1) D [Ex ia Da] [Ex op is Da] IIIC
EAC gas explosion protection	Ex 1 Ex d [ia Ga] [op is T6 Ga] IIC T4 Gb X
EAC dust explosion protection	Ex [Ex ia Da] [Ex op is Da] IIIC
Certificates	ATEX (DEK), Brazil (ULB), Canada (FM), EAC (STV), IECEx (DEK), International (FF), USA (FM)
Notes	CCC certificate available from 2021 onward
Ship approval	EU RO MR
Electrical Data	
Interface Ethernet	Fibre optic cable, 100BASE-FX, Ex op is (IEC 60079-28)
Transmission distance	2000 m

Ethernet CPU Module for Zone 1 / Div. 1

Series 9441/12

Technical Data

Electrical Data	
Transmission rate	max. 100 Mbit/s
Ethernet Connection	Multimode 62,5/125 µm (OM1) and 50/125 µm (OM2), plug LC
Auxiliary Power	
Nominal voltage	24 V DC
Current consumption (without I/O modules)	0.36 A at 24 V DC
Current consumption (with 8 I/O modules)	Approx. 2.6 A at 24 V DC
Current consumption (with 16 I/O modules)	Approx. 4.9 A at 24 V DC
Power dissipation (without I/O modules)	8.6 W
Power dissipation (8 I/O modules)	14 W
Ambient Conditions	
Ambient temperature	-20°C ... +65°C
Mechanical Data	
Degree of protection IP (IEC 60529)	IP30

Accessories

Figure	Description	Art. No.	Listprice €	PS	Weight kg
Device DTM IS1 Series 9499					
	- Parametrisation and configuration of the IS1+ system - Communication with HART-compatible field devices - Support for all common FDT frame applications (e.g. FieldCare, PactWare™) - Condition monitoring - Scan function for automatic topology generation - Download from r- stahl.com	–	–	–	–
	9499/DTM-IS1-02 Com/Device/HART 30 Free-of-charge software licence for up to 30 HART devices	251237	–	27	–
	9499/DTM-IS1-04 Com/Device/HART 300 Software licence for up to 300 HART devices	251239	379.00	27	–
	9499/DTM-IS1-06 Com/Device/HART unltd. Software licence for an unlimited number of HART devices	251240	1097.00	27	–
Series 9492/12 - Socket for CPU and Power Module					
	Zone 1 Fieldbus: Modbus TCP, simplex 24 V DC	166176▲	280.00	22	1.100
	Zone 1 Fieldbus: EtherNet/IP™, simplex 24 V DC	166322▲	280.00	22	1.100
	Zone 1 Fieldbus: PROFINET, simplex 24 V DC	166321▲	280.00	22	1.100
	Zone 1 Fieldbus: Modbus TCP, redundant 24 V DC	166324▲	554.00	22	2.200
Media converter FX op is / TX SC for Zone 2					
	Media Converter of 10/100 Base-Tx (1 x RJ45 port) to 100 Base-Fx "Ex op is" (1 x FO port SC); Multi mode (up to 4 km range); Webcode: 9721A	220381▲	322.00	75	0.240
Unmanaged Switch FX op is / TX SC					
	Unmanaged Switch FX op is to TX; SC plug connector FO cable 4 multi mode (MM), 2 RJ45, Installation in Zone 2	243427▲	1494.00	75	0.500

Accessories

Figure	Description	Art. No.	Listprice €	PS	Weight kg
FO patch cable					
	Patch cable for connection of IS1+ Ethernet CPU 9441 and 9442 with media converter 9721; plug LC / SC; length 3 m	220911▲	82.00	Z2	–

Sockets and accessories for Div. 1 installation on request

Dimensional Drawings (All Dimensions in mm [inches]) – Subject to Alterations

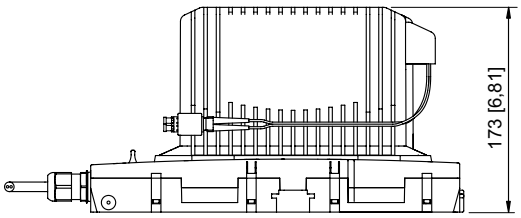

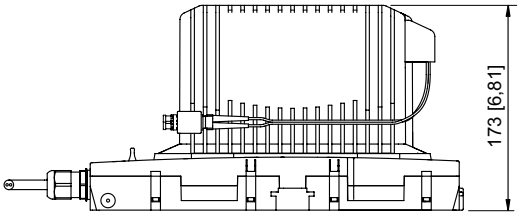

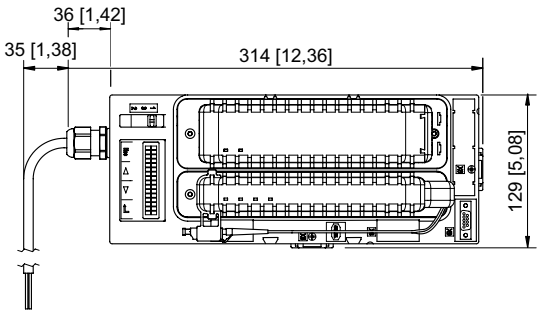

Ethernet CPU Module & Power Module with Socket for Zone 1

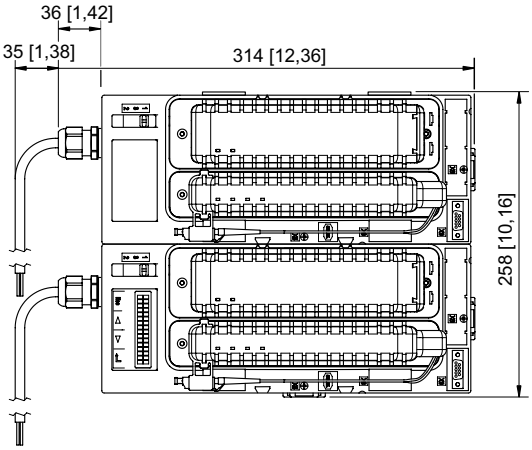

Ethernet CPU Module & Power Module with redundant Socket for Zone 1

Ethernet CPU Module for Zone 1 / Div. 1

Series 9441/12

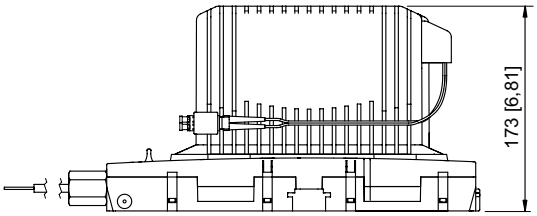

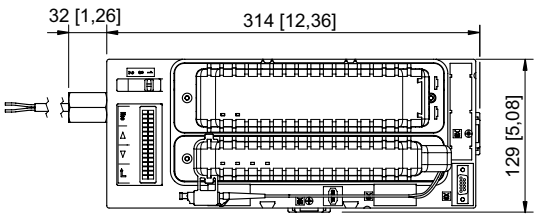

Ethernet CPU Module & Power Module with Socket for Div. 1

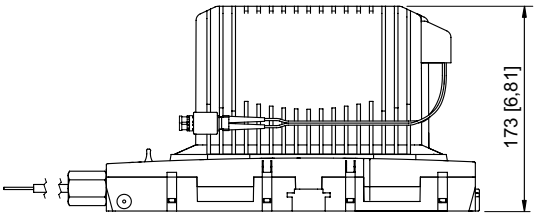

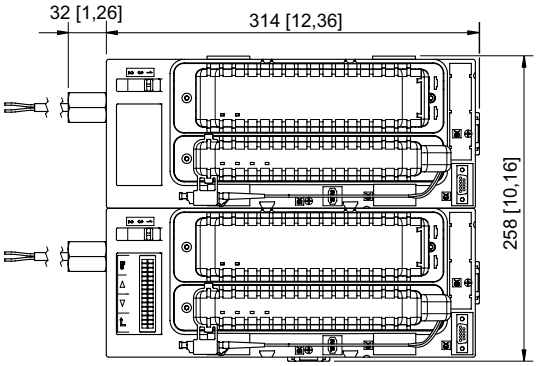

Ethernet CPU Module & Power Module with redundant Socket for Div. 1

Ethernet Power Module for Zone 1 / Div. 1

Series 9444/12



- For intrinsically safe IS1+ system supply
- For up to eight IS1+ I/O modules and connected field devices
- Power module hot swap in Zone 1 and Class I, Div. 1
- Use together with 9441/12 CPU and 9492/12 socket

WebCode 9444A

The series 9444/12 power module supplies up to eight IS1+ I/O modules, including the connected field circuits, with intrinsically safe energy. A 24 V DC external power supply is required. The power module can be replaced while the system is in operation and without having to disconnect the power supply (i.e. hot swapped).

	IECEx / ATEX					
Zone	0	1	2	20	21	22
Ex interface	•	•	•	•	•	•
Installation in		•	•			

	NEC 500 CEC Appendix J					
	Class I		Class II		Class III	
Division	1	2	1	2	1	2
Ex interface	•	•	•	•	•	•
Installation in	•	•				

	CEC Section 18 NEC® 505			NEC® 506		
	Class I					
Zone	0	1	2	20	21	22
Ex interface	•	•	•			
Installation in		•	•			

Selection Table

Installation	Zone 1 / Division 1				
Nominal voltage	Product Type	Art. No.	Listprice €	PS	Weight kg
24 V DC	9444/12-11	166178▲	466.00	22	2.410

Please order the 9441/12 CPU and 9492/12 base (see accessories) separately.

Technical Data

Explosion Protection	
IECEx gas explosion protection	Ex d e [ia Ga] IIC T4 Gb
IECEx dust explosion protection	[Ex ia Da] IIIC
ATEX gas explosion protection	II 2 (1) G Ex d e [ia Ga] IIC T4 Gb
ATEX dust explosion protection	II (1) D [Ex ia Da] IIIC
EAC gas explosion protection	1 Ex d e [ia Ga] IIC T4 Gb X
EAC dust explosion protection	[Ex ia Da] IIIC
Certificates	ATEX (DEK), Brazil (ULB), Canada (FM), EAC (STV), IECEx (DEK), USA (FM)
Notes	CCC certificate available from 2021 onward
Ship approval	EU RO MR
Auxiliary Power	
Current consumption (without I/O modules)	0.36 A at 24 V DC
Current consumption (with 8 I/O modules)	Approx. 2.6 A at 24 V DC
Power dissipation (without I/O modules)	8.6 W
Power dissipation (8 I/O modules)	14 W

▲ Preferred products – in stock or available at short notice

Ethernet Power Module for Zone 1 / Div. 1

Series 9444/12

Technical Data

Ambient Conditions	
Ambient temperature	-20°C ... +65°C
Mechanical Data	
Degree of protection IP (IEC 60529)	IP30

Accessories

Figure	Description	Art. No.	Listprice €	PS	Weight kg
Series 9492/12 - Socket for CPU and Power Module					
	Zone 1 Fieldbus: Modbus TCP, simplex 24 V DC	166176▲	280.00	22	1.100
	Zone 1 Fieldbus: PROFINET, simplex 24 V DC	166321▲	280.00	22	1.100
	Zone 1 Fieldbus: EtherNet/IP™, simplex 24 V DC	166322▲	280.00	22	1.100
	Zone 1 Fieldbus: Modbus TCP, redundant 24 V DC	166324▲	554.00	22	2.200

Sockets and accessories for Div. 1 installation on request

Dimensional Drawings (All Dimensions in mm [inches]) – Subject to Alterations

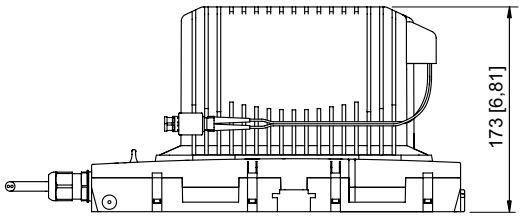

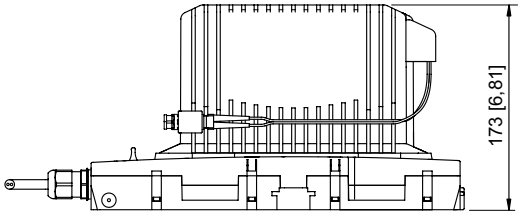

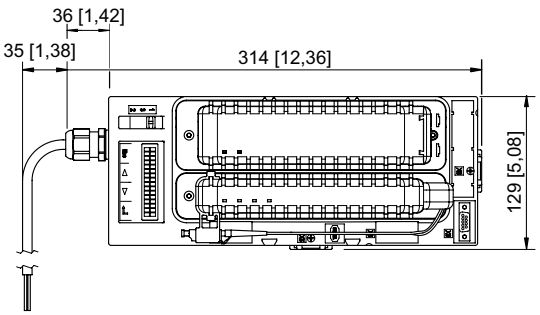

Ethernet CPU Module & Power Module with Socket for Zone 1

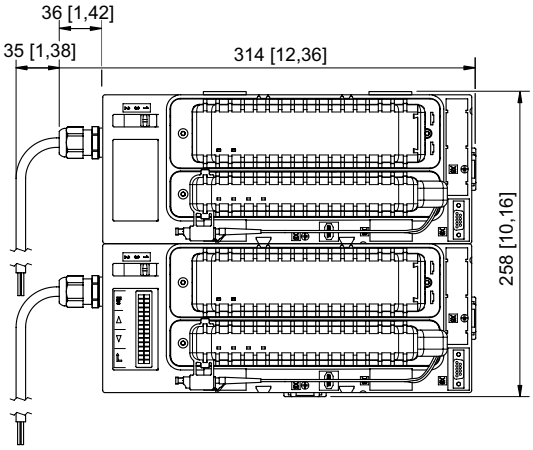

Ethernet CPU Module & Power Module with redundant Socket for Zone 1

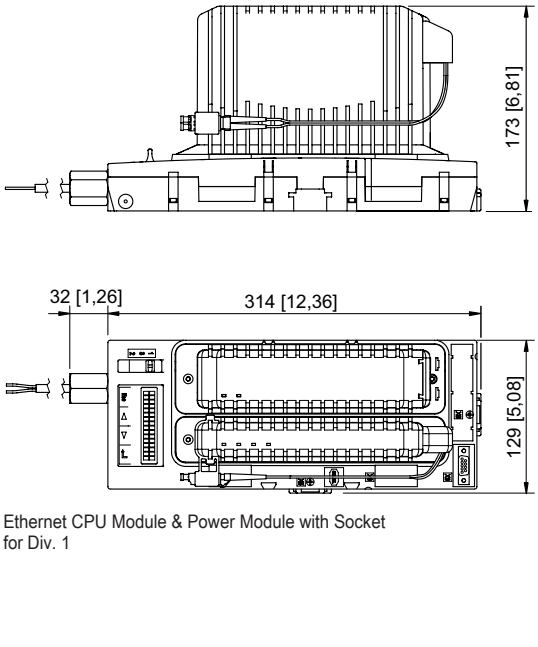

Ethernet CPU Module & Power Module with Socket for Div. 1

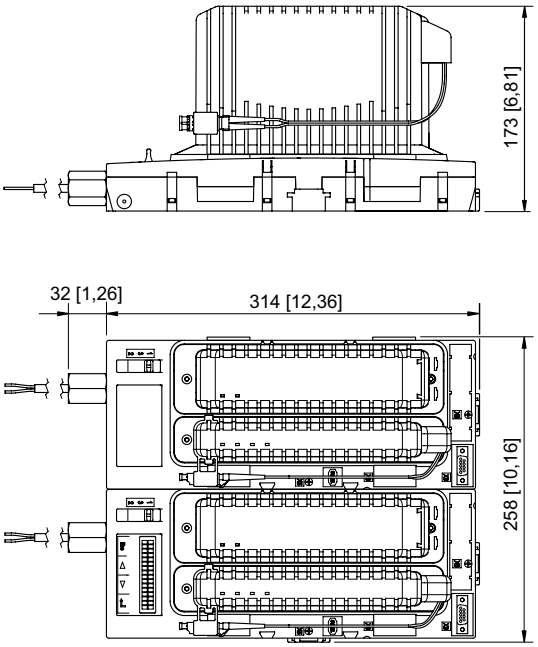

Ethernet CPU Module & Power Module with redundant Socket for Div. 1

Analog Universal Module HART for Zone 1 / Div. 1

Series 9468/32



- Eight channels can be used individually as inputs or outputs
- Intrinsically safe Ex ia inputs/outputs with line fault monitoring and LED error indication for each channel
- Module hot swap in Zone 1 and Class I, Div. 1

WebCode **9468A**

The 9468/32 series HART Analog Universal Module for Zone 1 and Class I, Div. 1 has eight channels that can be used individually for I.S. operating two-/three-wire HART transmitters, four-wire transmitters or control valves/positioners with 0/4 to 20 mA signals. HART communication is bidirectional.
All inputs/outputs are short-circuit proof, galvanically isolated from the system and individually monitored to check for line faults.

	IECEx / ATEX					
Zone	0	1	2	20	21	22
Ex interface	•	•	•	•	•	•
Installation in		•	•			

	NEC 500 CEC Appendix J					
	Class I		Class II		Class III	
Division	1	2	1	2	1	2
Ex interface	•	•	•	•	•	•
Installation in	•	•				

	CEC Section 18 NEC® 505 Class I			NEC® 506		
Zone	0	1	2	20	21	22
Ex interface	•	•	•			
Installation in		•	•			

Selection Table

Installation	Zone 1, Zone 2 and in the safe area				
Number of channels	Product Type	Art. No.	Listprice €	PS	Weight kg
8 Ex i inputs/outputs	9468/32-08-11	210659▲	1121.00	22	0.275

Please order terminals separately - see accessories and spare parts.

Technical Data

Explosion Protection	
IECEx gas explosion protection	Ex ia [ia Ga] IIC T4 Gb
IECEx dust explosion protection	[Ex ia Da] IIIC
ATEX gas explosion protection	Ⓔx II 2 (1) G Ex ia [ia Ga] IIC T4 Gb
ATEX dust explosion protection	Ⓔx II (1) D [Ex ia Da] IIIC
EAC gas explosion protection	Ex 2 Ex nA ia [ia Ga] IIC T4 Gc X
EAC dust explosion protection	Ex [Ex ia Da] IIIC
Certificates	ATEX (DEK), Brazil (ULB), Canada (FM), EAC (STV), IECEx (DEK), India (PESO), Korea (KTL), Russia (Meteorological certificate), USA (FM)
Notes	CCC certificate available from 2021 onward
Ship approval	EU RO MR
Safety Data	
Maximum voltage U_o	24.4 V
Max. current I_o (2-conductor)	80 mA

Technical Data

Safety Data	
Max. current I_o (3-conductor)	81.8 mA
Max. power P_o (2-conductor)	488 mW
Max. power P_o (3-conductor)	499 mW
Electrical Data	
Number of channels	8 Ex i inputs/outputs
Channels	each with adjustable parameters as input or output (3-wire, 4-wire transmitters, or active mA-sources occupy 2 channels)
Nominal signal	4 ... 20 mA 0 ... 20 mA
Supply voltage	16 V, at 20 mA for 2-wire transmitters
Communication signal	HART protocol
Connection Ex i field signals	Pluggable, blue terminals, 16-pole, 2.5 mm², screw- or spring-type versions with lock
Notes	In order to operate an active 4-wire HART transmitter, a 9164 must be connected between each channel. 9164 is not required when operating 4-wire transmitter without HART communication.
Auxiliary Power	
Current consumption	220 mA (at 20 mA per channel)
Max. power consumption	5.3 W (at 20 mA / channel)
Max. power dissipation outputs	3.7 W (at 20 mA. 500 Ω / channel)
Max. power dissipation inputs	2.7 W (at 20 mA / channel)
Input	
Max. input resistance	14.1 Ω per channel
Output	
Output load resistance max.	750 Ω at 20 mA 700 Ω at 21.8 mA
Output step response (10 … 90 %)	40 ms
Ambient Conditions	
Ambient temperature	-40 °C ... +75 °C Observe operating instructions
Mechanical Data	
Degree of protection IP (IEC 60529)	IP20

Accessories

Figure	Description	Art. No.	Listprice €	PS	Weight kg
Pluggable terminal					
	2.5 mm² with lock, 16-pole, spring clamp connection, blue, for connecting the field signals to I/O modules, for intrinsically safe field circuits, incl. test jacks Labelling: 1 ... 16 Attention: An additional terminal is necessary for I/O module Series 9470 and 9482. Labelling: 17 ... 32	162695▲	17.30	Z2	0.028
Electronic relay					
	The electronic relay modules are used to switch from Ex e loads via intrinsically safe (Ex i) or non-intrinsically safe (Ex e) control. Coil circuit: Ex i or non-Ex i (Ex e)* Contact circuit: Non-Ex i (Ex e) *You can switch between Ex i and non-Ex i circuits, or vice-versa, at any time without restriction.	282457	266.00	29	0.110
Ex i/Ex e relay module for Zone 1					
	The Ex i/Ex e relay modules are used for the galvanically isolated switching of intrinsically safe circuits (Ex i) and non-Ex i (Ex e) electrical circuits. Coil circuit: Ex i or non-Ex i (Ex e)* Contact circuit: Ex i or non-Ex i (Ex e)* *You can switch between Ex i and non-Ex i circuits, or vice-versa, at any time without restriction	273000	266.00	29	0.110

▲ Preferred products – in stock or available at short notice

Analog Universal Module HART for Zone 1 / Div. 1

Series 9468/32

Accessories

Figure	Description	Art. No.	Listprice €	PS	Weight kg
Resistor error message suppression					
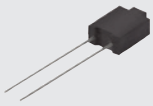	The resistors are used to suppress error messages for unused I/O channels Resistance value: 5K6 / 0.5 W Suitable for: AIM 9468; UMH 9469; DIOM 9470; DIOM 9471; DIOM 9472; DOM 9475 For intrinsically safe circuits (simple apparatus according to EN 60079-11)	244911	1.44	Z2	–
	The resistors are used to suppress error messages for unused I/O channels Resistance value: 62R / 0.5 W Suitable for: AOM 9468; UMH 9469; DIOM 9472; TIM 9482	244912	1.44	Z2	–
Partition					
	For mounting between intrinsically safe and non-intrinsically safe connections of the I/O modules, in order to adhere to the required 50 mm distance	220101▲	2.50	Z2	0.010

Spare Parts

Figure	Description	Art. No.	Listprice €	PS	Weight kg
Warning sign					
	"Clean modules only with a damp cloth."	162796	80.90	E1	0.001
Labelling strips					
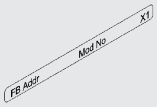	"FB Addr ... Mod No ..." for pluggable terminal, 26 pieces on the sheet	162788	150.00	E1	0.001
DIN A4 sheet					
	For the label plate on I/O modules, 6 labels per sheet Print IS Wizard, packaging unit = 20 sheets	162832	63.50	E1	0.001

Dimensional Drawings (All Dimensions in mm [inches]) – Subject to Alterations

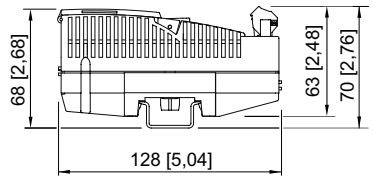

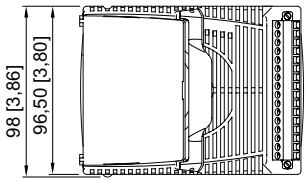

▲ Preferred products – in stock or available at short notice



- Eight channels can be used individually as inputs or outputs
- Intrinsically safe Ex ia inputs/outputs with line fault monitoring
- Module hot swap in Zone 2 and Class I, Div. 2

WebCode 9468B

The 9468/32 series HART Analog Universal Module for Zone 2 and Class I, Div. 2 has eight channels that can be used individually for I.S. operating two-/three-wire HART transmitters, four-wire transmitters or control valves/positioners with 0/4 to 20 mA signals. HART communication is bidirectional.
All inputs/outputs are short-circuit proof, galvanically isolated from the system and individually monitored to check for line faults.

	IECEx / ATEX					
Zone	0	1	2	20	21	22
Ex interface	•	•	•	•	•	•
Installation in			•			

	NEC 500 CEC Appendix J					
	Class I		Class II		Class III	
Division	1	2	1	2	1	2
Ex interface	•	•	•	•	•	•
Installation in		•				

	CEC Section 18					
	NEC® 505 Class I			NEC® 506		
Zone	0	1	2	20	21	22
Ex interface	•	•	•			
Installation in			•			

Selection Table					
Installation	Zone 2 and in the safe area				
Number of channels	Product Type	Art. No.	Listprice €	PS	Weight kg
8 Ex i inputs/outputs	9468/33-08-10	210660▲	901.00	22	0.275

Please order terminals separately - see accessories and spare parts.

Technical Data	
Explosion Protection	
IECEx gas explosion protection	Ex ec ia [ia Ga] IIC T4 Gc
IECEx dust explosion protection	[Ex ia Da] IIIC
ATEX gas explosion protection	I 3 (1) G Ex ec ia [ia Ga] IIC T4 Gc
ATEX dust explosion protection	II (1) D [Ex ia Da] IIIC
EAC gas explosion protection	2 Ex nA ia [ia Ga] IIC T4 Gc X
EAC dust explosion protection	[Ex ia Da] IIIC
Certificates	ATEX (DEK), Brazil (ULB), Canada (FM), EAC (STV), IECEx (DEK), India (PESO), Korea (KTL), Russia (Meteorological certificate), USA (FM)
Notes	CCC certificate available from 2021 onward
Ship approval	EU RO MR
Safety Data	
Maximum voltage U_o	24.4 V
Max. current I_o (2-conductor)	80 mA

Analog Universal Module HART for Zone 2 / Div. 2

Series 9468/33

Technical Data

Safety Data	
Max. current I_o (3-conductor)	81.8 mA
Max. power P_o (2-conductor)	488 mW
Max. power P_o (3-conductor)	499 mW
Electrical Data	
Number of channels	8 Ex i inputs/outputs
Channels	each with adjustable parameters as input or output (3-wire, 4-wire transmitters, or active mA-sources occupy 2 channels)
Nominal signal	4 ... 20 mA 0 ... 20 mA
Supply voltage	16 V, at 20 mA for 2-wire transmitters
Communication signal	HART protocol
Connection Ex i field signals	Pluggable, blue terminals, 16-pole, 2.5 mm², screw- or spring-type versions with lock
Notes	In order to operate an active 4-wire HART transmitter, a 9164 must be connected between each channel. 9164 is not required when operating 4-wire transmitter without HART communication.
Auxiliary Power	
Current consumption	220 mA (at 20 mA per channel)
Max. power consumption	5.3 W (at 20 mA / channel)
Max. power dissipation outputs	3.7 W (at 20 mA. 500 Ω / channel)
Max. power dissipation inputs	2.7 W (at 20 mA / channel)
Input	
Max. input resistance	14.1 Ω per channel
Output	
Output load resistance max.	750 Ω at 20 mA 700 Ω at 21.8 mA
Output step response (10 … 90 %)	40 ms
Ambient Conditions	
Ambient temperature	-40 °C ... +75 °C Observe operating instructions
Mechanical Data	
Degree of protection IP (IEC 60529)	IP20

Accessories

Figure	Description	Art. No.	Listprice €	PS	Weight kg
Pluggable terminal					
	2.5 mm² with lock, 16-pole, spring clamp connection, blue, for connecting the field signals to I/O modules, for intrinsically safe field circuits, incl. test jacks Labelling: 1 ... 16 Attention: An additional terminal is necessary for I/O module Series 9470 and 9482. Labelling: 17 ... 32	162695 ▲	17.30	Z2	0.028
Electronic relay					
	The electronic relay modules are used to switch from Ex e loads via intrinsically safe (Ex i) or non-intrinsically safe (Ex e) control. Coil circuit: Ex i or non-Ex i (Ex e)* Contact circuit: Non-Ex i (Ex e) *You can switch between Ex i and non-Ex i circuits, or vice-versa, at any time without restriction.	282457	266.00	29	0.110
Ex i/Ex e relay module for Zone 1					
	The Ex i/Ex e relay modules are used for the galvanically isolated switching of intrinsically safe circuits (Ex i) and non-Ex i (Ex e) electrical circuits. Coil circuit: Ex i or non-Ex i (Ex e)* Contact circuit: Ex i or non-Ex i (Ex e)* *You can switch between Ex i and non-Ex i circuits, or vice-versa, at any time without restriction	273000	266.00	29	0.110

Accessories

Figure	Description	Art. No.	Listprice €	PS	Weight kg
Resistor error message suppression					
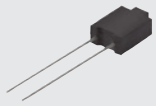	The resistors are used to suppress error messages for unused I/O channels Resistance value: 5K6 / 0.5 W Suitable for: AIM 9468; UMH 9469; DIOM 9470; DIOM 9471; DIOM 9472; DOM 9475 For intrinsically safe circuits (simple apparatus according to EN 60079-11)	244911	1.44	Z2	–
	The resistors are used to suppress error messages for unused I/O channels Resistance value: 62R / 0.5 W Suitable for: AOM 9468; UMH 9469; DIOM 9472; TIM 9482	244912	1.44	Z2	–
Partition					
	For mounting between intrinsically safe and non-intrinsically safe connections of the I/O modules, in order to adhere to the required 50 mm distance	220101▲	2.50	Z2	0.010

Spare Parts

Figure	Description	Art. No.	Listprice €	PS	Weight kg
Warning sign					
	"Clean modules only with a damp cloth."	162796	80.90	E1	0.001
Labelling strips					
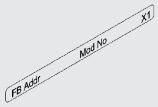	"FB Addr ... Mod No ..." for pluggable terminal, 26 pieces on the sheet	162788	150.00	E1	0.001
DIN A4 sheet					
	For the label plate on I/O modules, 6 labels per sheet Print IS Wizard, packaging unit = 20 sheets	162832	63.50	E1	0.001

Dimensional Drawings (All Dimensions in mm [inches]) – Subject to Alterations

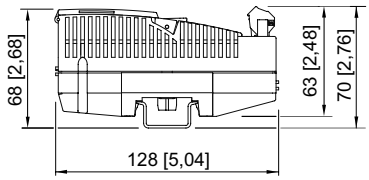

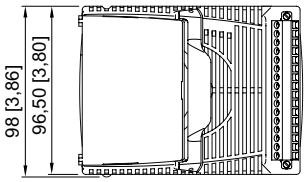

▲ Preferred products – in stock or available at short notice

Universal Module HART Zone 2 / Div. 2 Ex n

Series 9469/35



- 8 channels can be used as analog inputs or outputs, and 4 of these channels can be used as binary inputs or outputs
- Inputs/outputs Ex ec with line fault monitoring, LED fault and status display for each channel and SIL2 shutdown input
- Module hot swap in Zone 2 and Class I, Div. 2

WebCode 9469A

The HART 9469/35 universal module for Zone 2 and Class I, Div. 2 has 8 channels that are suitable for separately operating 2-/3-/4-wire HART transmitters, control valves/positioners and operating 3-wire proximity switches and 24 V / 0.5 A binary output signal can be used.
HART communication is bidirectional. All inputs/outputs are short-circuit proof, galvanically isolated from the system and individually monitored to check for line faults.

	IECEx / ATEX					
Zone	0	1	2	20	21	22
Ex interface			•			
Installation in			•			

	NEC 500 CEC Appendix J					
	Class I		Class II		Class III	
Division	1	2	1	2	1	2
Ex interface		•				
Installation in		•				

	CEC Section 18					
	NEC® 505 Class I			NEC® 506		
Zone	0	1	2	20	21	22
Ex interface			•			
Installation in			•			

Selection Table

Installation	Zone 2 and in the safe area (non-intrinsically safe field circuits)				
Number of channels	Product Type	Art. No.	Listprice €	PS	Weight kg
(adjustable parameters in pairs) 8 Ex ec/nA universal input/output	9469/35-08-12	230184▲	852.00	22	0.250

Please order terminal separately - see accessories and spare parts

Technical Data

Explosion Protection	
IECEx gas explosion protection	Ex ec ic [ia Ga] IIC T4 Gc
ATEX gas explosion protection	Ⓔx II 3 (1) G Ex ec ic [ia Ga] IIC T4 Gc
EAC gas explosion protection	Ex 2 Ex e ic [ia Ga] IIC T4 Gc X Ex 2 Ex nA ic [ia Ga] IIC T4 Gc X
Certificates	ATEX (DEK), Canada (FM), EAC (Sertium), IECEx (DEK), Korea (KTL), SIL (exida), USA (FM)
Notes	CCC certificate available from 2021 onward
Electrical Data	
Max. number of 2-conductor analogue inputs/ outputs	8 (channels 0 ... 7)
Max. number of 3/4-conductor analogue inputs	4 (channels 4 ... 7)
Max. number of 3-conductor PNP inputs	4 (channels 4 ... 7)
Max. number of binary outputs	4 (channels 4 ... 7)
Analogue digital communication	HART protocol

Technical Data

Electrical Data	
Digital communication note	up to Version 7.x, only at 4 to 20 mA
External supply voltage U_H (X0)	18 ... 32 V DC (nominal voltage of 24 V)
Max. current consumption (X0)	4 x 0.5 A (depends on the total current of the binary outputs)
Control input suitability (X0)	Disconnection up to SIL 2. low demand (IEC 61508)
Control input function (X0)	"Plant STOP" to switch off all channels
Auxiliary Power	
Power supply connection	BusRail types 9494
Auxiliary power version	Intrinsically safe Ex ia via BusRail
Current consumption	250 mA
Max. power consumption	6 W
Max. power dissipation outputs	5.9 W
Input	
Analogue input signal type	2/3/4-conductor transmitter
Analogue input nominal signal	0 ... 20 mA 4 ... 20 mA
Analogue input max. input resistance	200 Ω per channel
Binary input signal type	3-conductor PNP initiators 2-conductor 24 V contacts
Binary input signal type	corresponds to the ext. supply voltage U_H (X0)
Binary input internal resistance	11 kΩ
Output	
Analogue output signal type	2-conductor transmitter
Analogue output nominal signal	0 ... 20 mA 4 ... 20 mA
Analogue output max. input resistance	200 Ω per channel
Analogue output max. load resistance	750 Ω at 20 mA 700 Ω at 21.8 mA
Binary output signal type	2-conductor (24 V / 0.5 A)
Binary output supply voltage	corresponds to the ext. supply voltage U_H - 0.7 V (X0)
Binary output output current	30 mA … 0.5 A per channel (electronically limited)
Binary output connectable loads	ohmic inductive capacitive
Ambient Conditions	
Ambient temperature	-40°C ... +75°C
Mechanical Data	
Degree of protection IP (IEC 60529)	IP20

Accessories

Figure	Description	Art. No.	Listprice €	PS	Weight kg
Electronic relay					
	The electronic relay modules are used to switch from Ex e loads via intrinsically safe (Ex i) or non-intrinsically safe (Ex e) control. Coil circuit: Ex i or non-Ex i (Ex e)* Contact circuit: Non-Ex i (Ex e) *You can switch between Ex i and non-Ex i circuits, or vice-versa, at any time without restriction.	282457	266.00	29	0.110
Ex i/Ex e relay module for Zone 1					
	The Ex i/Ex e relay modules are used for the galvanically isolated switching of intrinsically safe circuits (Ex i) and non-Ex i (Ex e) electrical circuits. Coil circuit: Ex i or non-Ex i (Ex e)* Contact circuit: Ex i or non-Ex i (Ex e)* *You can switch between Ex i and non-Ex i circuits, or vice-versa, at any time without restriction	273000	266.00	29	0.110

Universal Module HART Zone 2 / Div. 2 Ex n

Series 9469/35

Accessories

Figure	Description	Art. No.	Listprice €	PS	Weight kg
Termination Board 9491					
	The termination boards are used for parallel switching of the inputs and outputs of two I/O modules for signal redundancy. Signal redundancy for I/O modules 9469/35 from firmware 04-xx	273018	88.00	Z2	0.250
Plug-in terminal					
	1.5 mm² with lock, 24-pole, spring clamp connection, black for connecting the field signals to I/O modules, for non-intrinsically safe field circuits Caution: only for 9469, 9471 and 9472 I/O modules Labelling: 1 ... 24	245090 ▲	17.30	Z2	0.020
Resistor error message suppression					
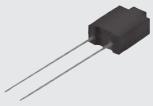	The resistors are used to suppress error messages for unused I/O channels Resistance value: 5K6 / 0.5 W Suitable for: AIM 9468; UMH 9469; DIOM 9470; DIOM 9471; DIOM 9472; DOM 9475 For intrinsically safe circuits (simple apparatus according to EN 60079-11)	244911	1.44	Z2	–
	The resistors are used to suppress error messages for unused I/O channels Resistance value: 62R / 0.5 W Suitable for: AOM 9468; UMH 9469; DIOM 9472; TIM 9482	244912	1.44	Z2	–
Partition					
	For mounting between intrinsically safe and non-intrinsically safe connections of the I/O modules, in order to adhere to the required 50 mm distance	220101 ▲	2.50	Z2	0.010

Spare Parts

Figure	Description	Art. No.	Listprice €	PS	Weight kg
Warning sign					
	"Clean modules only with a damp cloth."	162796	80.90	E1	0.001
Labelling strips					
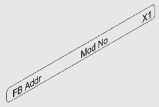	"FB Addr ... Mod No ..." for pluggable terminal, 26 pieces on the sheet	162788	150.00	E1	0.001
DIN A4 sheet					
	For the label plate on I/O modules, 6 labels per sheet Print IS Wizard, packaging unit = 20 sheets	162832	63.50	E1	0.001

Dimensional Drawings (All Dimensions in mm [inches]) – Subject to Alterations

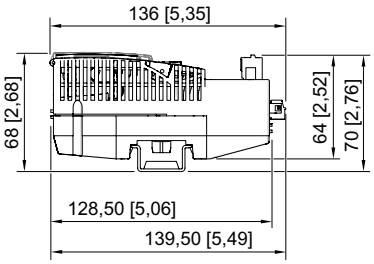

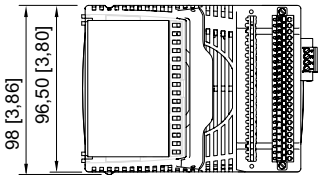

A4

Digital Input Output Module for Zone 1 / Div. 1

Series 9470/32



- 16 channels can be used in pairs as inputs or outputs
- Intrinsically safe Ex ia inputs/outputs with line fault monitoring and LED error and status indication for each channel
- Module hot swap in Zone 1 and Class I, Div. 1

WebCode 9470C

The 9470/32 series digital input/output module for Zone 1 and Class I, Div. 1 has 16 channels, which can be used in pairs for I.S. operation as inputs for contacts and NAMUR proximity sensors (EN 60947-5-6) or as outputs for indicator lamps and low-power solenoid valves. Eight inputs can be used for frequencies of up to 20 kHz, and four can be used for detecting the direction of rotation.
All inputs/outputs are short-circuit proof and galvanically isolated from the system.

	IECEx / ATEX					
Zone	0	1	2	20	21	22
Ex interface	•	•	•	•	•	•
Installation in		•	•			

	NEC 500 CEC Appendix J					
	Class I		Class II		Class III	
Division	1	2	1	2	1	2
Ex interface	•	•	•	•	•	•
Installation in	•	•				

	CEC Section 18 NEC® 505			NEC® 506		
	Class I					
Zone	0	1	2	20	21	22
Ex interface	•	•	•			
Installation in		•	•			

Selection Table

Installation	in Zone 1, Zone 2 and in safe areas				
Number of channels	Product Type	Art. No.	Listprice €	PS	Weight kg
(adjustable parameters in pairs) 16 Ex i inputs/outputs	9470/32-16-11	210447▲	723.00	22	0.275

Please order 2 terminals separately - see accessories and spare parts

Technical Data

Explosion Protection	
IECEx gas explosion protection	Ex ia [ia Ga] IIC T4 Gb
IECEx dust explosion protection	[Ex ia Da] IIIC
ATEX gas explosion protection	Ⓔx II 2 (1) G Ex ia [ia Ga] IIC T4 Gb
ATEX dust explosion protection	Ⓔx II (1) D [Ex ia Da] IIIC
EAC gas explosion protection	[Ex] 1 Ex ia [ia Ga] IIC T4 Gb X
EAC dust explosion protection	[Ex] [Ex ia Da] IIIC
Certificates	ATEX (DEK), Brazil (ULB), Canada (FM), EAC (STV), IECEx (DEK), India (PESO), Korea (KTL), USA (FM)
Notes	CCC certificate available from 2021 onward
Ship approval	EU RO MR
Safety Data	
Maximum voltage U_o	9.8 V
Max. current I_o (Ex ia)	10.4 mA

Technical Data

Safety Data	
Max. power P_o (Ex ia)	25.5 mW
Auxiliary Power	
Current consumption	120 mA
Max. power consumption	2.5 W
Max. power dissipation outputs	2.5 W
Input	
Signal input	EN 60947 input (NAMUR)
Supply voltage	8.2 V
Function	Up/down counter Frequency with direction
Notes	IEC 60947-5-6-1999 (NAMUR), 3-conductor PNP proximity switches and active 24 V signals with and without 47 kΩ resistance connected in parallel
Output	
Output rated operation	6 V / 2 mA
Notes	Output characteristic, see data sheet on the Internet r-stahl.com (WebCode 9470C)
Ambient Conditions	
Ambient temperature	-40°C ... +75°C

Accessories

Figure	Description	Art. No.	Listprice €	PS	Weight kg
Pluggable terminal					
	2.5 mm² with lock, 16-pole, spring clamp connection, blue, for connecting the field signals to I/O modules, for intrinsically safe field circuits, incl. test jacks Labelling: 1 ... 16 Attention: An additional terminal is necessary for I/O module Series 9470 and 9482. Labelling: 17 ... 32	162695 ▲	17.30	Z2	0.028
	2.5 mm² with lock, 16-pole, spring clamp connection, blue for connecting the field signals to I/O modules, for intrinsically safe field circuits, incl. test jacks Labelling: 17 ... 32	162716 ▲	17.30	Z2	0.028
Partition					
	For mounting between intrinsically safe and non-intrinsically safe connections of the I/O modules, in order to adhere to the required 50 mm distance	220101 ▲	2.50	Z2	0.010
Resistor error message suppression					
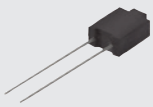	The resistors are used to suppress error messages for unused I/O channels Resistance value: 5K6 / 0.5 W Suitable for: AIM 9468; UMH 9469; DIOM 9470; DIOM 9471; DIOM 9472; DOM 9475 For intrinsically safe circuits (simple apparatus according to EN 60079-11)	244911	1.44	Z2	–

Spare Parts

Figure	Description	Art. No.	Listprice €	PS	Weight kg
Indicator lamp					
	Single electrical equipment for intrinsically safe circuits according to EN 60079-11	228026	98.80	E1	0.035

▲ Preferred products – in stock or available at short notice

Digital Input Output Module for Zone 1 / Div. 1

Series 9470/32

Spare Parts

Figure	Description	Art. No.	Listprice €	PS	Weight kg
Warning sign					
	"Clean modules only with a damp cloth."	162796	80.90	E1	0.001
Labelling strips					
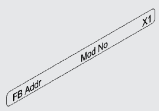	"FB Addr ... Mod No ..." for pluggable terminal, 26 pieces on the sheet	162788	150.00	E1	0.001
DIN A4 sheet					
	For the label plate on I/O modules, 6 labels per sheet Print IS Wizard, packaging unit = 20 sheets	162832	63.50	E1	0.001

Dimensional Drawings (All Dimensions in mm [inches]) – Subject to Alterations

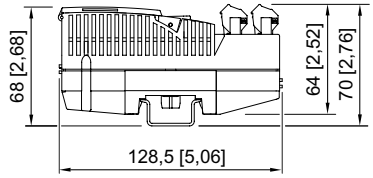

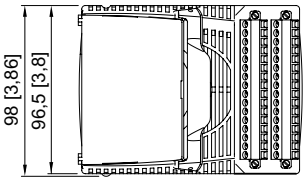



- 16 channels can be used in pairs as inputs or outputs
- Intrinsically safe Ex ia inputs/outputs with line fault monitoring
- Module hot swap in Zone 2 and Class I, Div. 2

WebCode 9470D

The 9470/33 series digital input/output module for Zone 2 and Class I, Div. 2 has 16 channels, which can be used in pairs for I.S. operation as inputs for contacts and NAMUR proximity sensors (EN 60947-5-6) or as outputs for indicator lamps and low-power solenoid valves. Eight inputs can be used for frequencies of up to 20 kHz, and four can be used for detecting the direction of rotation.
All inputs/outputs are short-circuit proof and galvanically separated from the system.

	IECEx / ATEX					
Zone	0	1	2	20	21	22
Ex interface	•	•	•	•	•	•
Installation in			•			

	NEC 500 CEC Appendix J					
	Class I		Class II		Class III	
Division	1	2	1	2	1	2
Ex interface	•	•	•	•	•	•
Installation in		•				

	CEC Section 18					
	NEC® 505 Class I			NEC® 506		
Zone	0	1	2	20	21	22
Ex interface	•	•	•			
Installation in			•			

Selection Table

Installation	in Zone 2 and in safe areas				
Number of channels	Product Type	Art. No.	Listprice €	PS	Weight kg
16 Ex i inputs/outputs (adjustable parameters in pairs)	9470/33-16-10	210448▲	600.00	22	0.275

Please order 2 terminals separately - see accessories and spare parts

Technical Data

Explosion Protection	
IECEx gas explosion protection	Ex ec ia [ia Ga] IIC T4 Gc
IECEx dust explosion protection	[Ex ia Da] IIIC
ATEX gas explosion protection	Ⓔx I 3 (1) G Ex ec ia [ia Ga] IIC T4 Gc
ATEX dust explosion protection	Ⓔx II (1) D [Ex ia Da] IIIC
EAC gas explosion protection	Ex 2 Ex nA ia [ia Ga] IIC T4 Gc X
EAC dust explosion protection	Ex [Ex ia Da] IIIC
Certificates	ATEX (DEK), Brazil (ULB), Canada (FM), EAC (STV), IECEx (DEK), India (PESO), Korea (KTL), USA (FM)
Notes	CCC certificate available from 2021 onward
Ship approval	EU RO MR
Safety Data	
Maximum voltage U_o	9.8 V
Max. current I_o (Ex ia)	10.4 mA

Digital Input Output Module for Zone 2 / Div. 2

Series 9470/33

Technical Data

Safety Data	
Max. power P_o (Ex ia)	25.5 mW
Auxiliary Power	
Current consumption	120 mA
Max. power consumption	2.5 W
Max. power dissipation outputs	2.5 W
Input	
Signal input	EN 60947 input (NAMUR)
Supply voltage	8.2 V
Function	Frequency with direction Up/down counter
Output	
Output rated operation	6 V / 2 mA
Notes	Output characteristic, see data sheet on the Internet r-stahl.com (WebCode 9470D)
Ambient Conditions	
Ambient temperature	-40°C ... +75°C

Accessories

Figure	Description	Art. No.	Listprice €	PS	Weight kg
Pluggable terminal					
	2.5 mm² with lock, 16-pole, spring clamp connection, blue, for connecting the field signals to I/O modules, for intrinsically safe field circuits, incl. test jacks Labelling: 1 ... 16 Attention: An additional terminal is necessary for I/O module Series 9470 and 9482. Labelling: 17 ... 32	162695 ▲	17.30	Z2	0.028
	2.5 mm² with lock, 16-pole, spring clamp connection, blue for connecting the field signals to I/O modules, for intrinsically safe field circuits, incl. test jacks Labelling: 17 ... 32	162716 ▲	17.30	Z2	0.028
Partition					
	For mounting between intrinsically safe and non-intrinsically safe connections of the I/O modules, in order to adhere to the required 50 mm distance	220101 ▲	2.50	Z2	0.010
Resistor error message suppression					
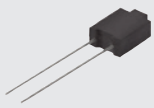	The resistors are used to suppress error messages for unused I/O channels Resistance value: 5K6 / 0.5 W Suitable for: AIM 9468; UMH 9469; DIOM 9470; DIOM 9471; DIOM 9472; DOM 9475 For intrinsically safe circuits (simple apparatus according to EN 60079-11)	244911	1.44	Z2	–

Spare Parts

Figure	Description	Art. No.	Listprice €	PS	Weight kg
Warning sign					
	"Clean modules only with a damp cloth."	162796	80.90	E1	0.001
Indicator lamp					
	Single electrical equipment for intrinsically safe circuits according to EN 60079-11	228026	98.80	E1	0.035

Spare Parts

Figure	Description	Art. No.	Listprice €	PS	Weight kg
Labelling strips					
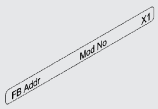	"FB Addr ... Mod No ..." for pluggable terminal, 26 pieces on the sheet	162788	150.00	E1	0.001
DIN A4 sheet					
	For the label plate on I/O modules, 6 labels per sheet Print IS Wizard, packaging unit = 20 sheets	162832	63.50	E1	0.001

A4

Dimensional Drawings (All Dimensions in mm [inches]) – Subject to Alterations

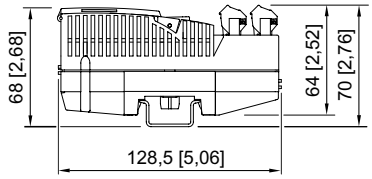

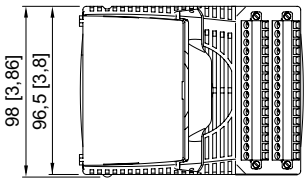

Digital Input Output Module NAMUR

Series 9471/35 for Zone 2 / Div. 2 Ex n



- 16 channels can be used in pairs as inputs or outputs
- Inputs/outputs Ex ec with line fault monitoring and LED error and status indication for each channel
- Module hot swap in Zone 2 and Class I, Div. 2

WebCode 9471B

The 9471/35 series digital input/output module for Zone 2 and Class I, Div. 2 has 16 channels, which can be used in pairs for operation as inputs for contacts, NAMUR proximity sensors (EN 60947-5-6) and PNP proximity switches or as outputs for indicator lamps and low-power solenoid valves. Eight inputs can be used for frequencies of up to 20 kHz, and four can be used for detecting the direction of rotation.
All inputs/outputs are short-circuit proof and galvanically isolated from the system.

	IECEx / ATEX					
Zone	0	1	2	20	21	22
Ex interface			•			
Installation in			•			

	NEC 500 CEC Appendix J					
	Class I		Class II		Class III	
Division	1	2	1	2	1	2
Ex interface		•				
Installation in		•				

	CEC Section 18 NEC® 505 Class I			NEC® 506		
Zone	0	1	2	20	21	22
Ex interface			•			
Installation in			•			

Selection Table

Installation	Zone 2 and safe area				
Number of channels	Product Type	Art. No.	Listprice €	PS	Weight kg
(adjustable parameters in pairs) 16 Ex ec/nA inputs/outputs	9471/35-16-11	230225▲	568.00	22	0.275

Please order 2 terminals separately - see accessories and spare parts

Technical Data

Explosion Protection	
IECEx gas explosion protection	Ex ec ic [ia Ga] IIC T4 Gc
ATEX gas explosion protection	Ⓔx II 3 (1) G Ex ec ic [ia Ga] IIC T4 Gc
EAC gas explosion protection	2 Ex e ic [ia Ga] IIC T4 Gc X 2 Ex nA ic [ia Ga] IIC T4 Gc
Certificates	ATEX (DEK), Canada (FM), EAC (Sertium), IECEx (DEK), India (PESO), Korea (KTL), USA (FM)
Notes	CCC certificate available from 2021 onward
Ship approval	EU RO MR
Electrical Data	
Max. number of 3-conductor PNP inputs	16 (channels 1... 15)
Auxiliary Power	
Current consumption	90 mA
Max. power consumption	2.2 W
Power dissipation max.	0.7 W

Technical Data

Input	
Max. number of frequency inputs	8 (channel 8 ... 15)
Notes	Max. supply voltage PNP: 24 V externally supplied IEC 60947-5-6-1999 (NAMUR), 3-conductor PNP proximity switches and active 24 V signals with and without 47 kΩ resistance connected in parallel
Output	
Notes	Output characteristics, see data sheet online at r-stahl.com (WebCode 9471B)
Ambient Conditions	
Ambient temperature	-40°C ... +75°C
Mechanical Data	
Degree of protection IP (IEC 60529)	IP20

Accessories

Figure	Description	Art. No.	Listprice €	PS	Weight kg
Electronic relay					
	The electronic relay modules are used to switch from Ex e loads via intrinsically safe (Ex i) or non-intrinsically safe (Ex e) control. Coil circuit: Ex i or non-Ex i (Ex e)* Contact circuit: Non-Ex i (Ex e) *You can switch between Ex i and non-Ex i circuits, or vice-versa, at any time without restriction.	282457	266.00	29	0.110
Ex i/Ex e relay module for Zone 1					
	The Ex i/Ex e relay modules are used for the galvanically isolated switching of intrinsically safe circuits (Ex i) and non-Ex i (Ex e) electrical circuits. Coil circuit: Ex i or non-Ex i (Ex e)* Contact circuit: Ex i or non-Ex i (Ex e)* *You can switch between Ex i and non-Ex i circuits, or vice-versa, at any time without restriction	273000	266.00	29	0.110
Plug-in terminal					
	1.5 mm² with lock, 24-pole, spring clamp connection, black for connecting the field signals to I/O modules, for non-intrinsically safe field circuits Caution: only for 9469, 9471 and 9472 I/O modules Labelling: 1 ... 24	245090▲	17.30	Z2	0.020
	1.5 mm² with lock, 24-pole, spring clamp connection, black for connecting the field signals to I/O modules, for non-intrinsically safe field circuits Caution: only for 9469, 9471 and 9472 I/O modules Labelling: 25 ... 48	245091▲	17.30	Z2	0.020
Resistor error message suppression					
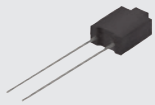	The resistors are used to suppress error messages for unused I/O channels Resistance value: 5K6 / 0.5 W Suitable for: AIM 9468; UMH 9469; DIOM 9470; DIOM 9471; DIOM 9472; DOM 9475 For intrinsically safe circuits (simple apparatus according to EN 60079-11)	244911	1.44	Z2	–
Partition					
	For mounting between intrinsically safe and non-intrinsically safe connections of the I/O modules, in order to adhere to the required 50 mm distance	220101▲	2.50	Z2	0.010

Spare Parts

Figure	Description	Art. No.	Listprice €	PS	Weight kg
Warning sign					
	"Clean modules only with a damp cloth."	162796	80.90	E1	0.001

Digital Input Output Module NAMUR

Series 9471/35 for Zone 2 / Div. 2 Ex n

Spare Parts

Figure	Description	Art. No.	Listprice €	PS	Weight kg
Labelling strips					
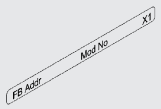	"FB Addr ... Mod No ..." for pluggable terminal, 26 pieces on the sheet	162788	150.00	E1	0.001
DIN A4 sheet					
	For the label plate on I/O modules, 6 labels per sheet Print IS Wizard, packaging unit = 20 sheets	162832	63.50	E1	0.001

Dimensional Drawings (All Dimensions in mm [inches]) – Subject to Alterations

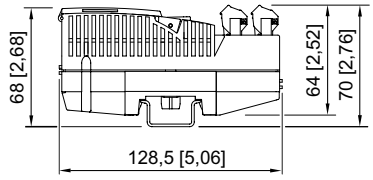

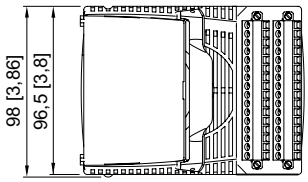



- 16 channels can be used in pairs as inputs or outputs (24 V / 0.5 A)
- Inputs/outputs Ex ec with line fault monitoring and LED error and status indication for each channel plus SIL 2 plant-stop input
- Module hot swap in Zone 2 and Class I, Div. 2

WebCode 9472A

The 9472/35 24 V series digital input/output module for Zone 2 and Class I, Div. 2 has 16 channels, which can be used in pairs for operation as inputs for contacts and PNP or NAMUR proximity sensors (EN 60947-5-6) or as outputs for solenoid valves up to 24 V/0.5 A. Eight inputs can be used for frequencies of up to 20 kHz, and four can be used for detecting the direction of rotation.
All inputs/outputs are short-circuit proof and galvanically isolated from the system. Additional control input for "Plant-Stop" (IEC61508 / through SIL2)

	IECEx / ATEX					
Zone	0	1	2	20	21	22
Ex interface			•			
Installation in			•			

	NEC 500 CEC Appendix J					
	Class I		Class II		Class III	
Division	1	2	1	2	1	2
Ex interface		•				
Installation in		•				

	CEC Section 18					
	NEC® 505 Class I			NEC® 506		
Zone	0	1	2	20	21	22
Ex interface			•			
Installation in			•			

Selection Table

Installation	Zone 2 and safe area				
Number of channels	Product Type	Art. No.	Listprice €	PS	Weight kg
16 Ex ec/nA inputs/outputs (adjustable parameters in pairs)	9472/35-16-12	230239▲	733.00	22	0.275

Please order 2 terminals separately - see accessories and spare parts

Technical Data

Explosion Protection	
IECEx gas explosion protection	Ex ec ic [ia Ga] IIC T4 Gc
ATEX gas explosion protection	II 3 (1) G Ex ec ic [ia Ga] IIC T4 Gc
EAC gas explosion protection	2 Ex e ic [ia Ga] IIC T4 Gc X 2 Ex nA ic [ia Ga] IIC T4 Gc
Certificates	ATEX (DEK), Canada (FM), EAC (Sertium), IECEx (DEK), India (PESO), Korea (KTL), SIL (exida), USA (FM)
Notes	CCC certificate available from 2021 onward
Electrical Data	
Max. number of 3-conductor PNP inputs	16 (channels 1... 15)
Auxiliary Power	
Current consumption	90 mA
Max. power consumption	2.2 W

Digital Input Output Module 24 V

Series 9472/35 for Zone 2 / Div. 2 Ex n

Technical Data

Auxiliary Power	
Power dissipation max.	Output: 5.4 W Input: 1.4 W
Input	
Max. number of frequency inputs	8 (channel 8 ... 15)
Notes	Max. supply voltage PNP: corresponds to the external supply voltage U_H (X0) External supply voltage U_H (X0): 18 ... 32 V DC (nominal voltage 24 V) Max. current consumption (X0): 4 x 0.5 A (depending on the total current of the binary outputs) IEC 60947-5-6-1999 (NAMUR), 3-conductor PNP proximity switches and active 24 V signals with and without 47 kΩ resistance connected in parallel
Output	
Supply voltage binary output	Corresponds to the ext. supply voltage U_H - 0.7 V (X0)
Output current binary output	30 mA ... 0.5 A per channel (electronically limited)
Notes	When auxiliary power is not connected: 6V / 2 mA
Ambient Conditions	
Ambient temperature	-40°C ... +75°C
Mechanical Data	
Degree of protection IP (IEC 60529)	IP20

Accessories

Figure	Description	Art. No.	Listprice €	PS	Weight kg
Electronic relay					
	The electronic relay modules are used to switch from Ex e loads via intrinsically safe (Ex i) or non-intrinsically safe (Ex e) control. Coil circuit: Ex i or non-Ex i (Ex e)* Contact circuit: Non-Ex i (Ex e) *You can switch between Ex i and non-Ex i circuits, or vice-versa, at any time without restriction.	282457	266.00	29	0.110
Ex i/Ex e relay module for Zone 1					
	The Ex i/Ex e relay modules are used for the galvanically isolated switching of intrinsically safe circuits (Ex i) and non-Ex i (Ex e) electrical circuits. Coil circuit: Ex i or non-Ex i (Ex e)* Contact circuit: Ex i or non-Ex i (Ex e)* *You can switch between Ex i and non-Ex i circuits, or vice-versa, at any time without restriction	273000	266.00	29	0.110
Plug-in terminal					
	1.5 mm² with lock, 24-pole, spring clamp connection, black for connecting the field signals to I/O modules, for non-intrinsically safe field circuits Caution: only for 9469, 9471 and 9472 I/O modules Labelling: 1 ... 24	245090▲	17.30	Z2	0.020
	1.5 mm² with lock, 24-pole, spring clamp connection, black for connecting the field signals to I/O modules, for non-intrinsically safe field circuits Caution: only for 9469, 9471 and 9472 I/O modules Labelling: 25 ... 48	245091▲	17.30	Z2	0.020
Resistor error message suppression					
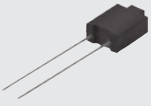	The resistors are used to suppress error messages for unused I/O channels Resistance value: 5K6 / 0.5 W Suitable for: AIM 9468; UMH 9469; DIOM 9470; DIOM 9471; DIOM 9472; DOM 9475 For intrinsically safe circuits (simple apparatus according to EN 60079-11)	244911	1.44	Z2	–
Partition					
	For mounting between intrinsically safe and non-intrinsically safe connections of the I/O modules, in order to adhere to the required 50 mm distance	220101▲	2.50	Z2	0.010

Spare Parts

Figure	Description	Art. No.	Listprice €	PS	Weight kg
Warning sign					
	"Clean modules only with a damp cloth."	162796	80.90	E1	0.001
Labelling strips					
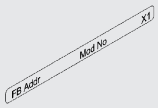	"FB Addr ... Mod No ..." for pluggable terminal, 26 pieces on the sheet	162788	150.00	E1	0.001
DIN A4 sheet					
	For the label plate on I/O modules, 6 labels per sheet Print IS Wizard, packaging unit = 20 sheets	162832	63.50	E1	0.001

Dimensional Drawings (All Dimensions in mm [inches]) – Subject to Alterations

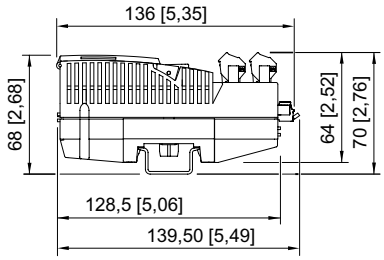

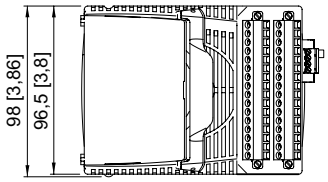

Digital Output Module 8-Channel Version

Series 9475/32-08 for Zone 1 / Div. 1



- 8 channels for I.S. solenoid valves up to 30 mA
- Intrinsically Safe outputs with line fault monitoring and LED error and status indication for each channel plus SIL 2 Plant-Stop input
- Module hot swap in Zone 1 and Class I, Div. 1

WebCode 9475C

9475/32-08 series digital output modules for Zone 1, and Class I, Div. 1 have eight channels for actuating I.S. solenoid valves or indicator lamps. An additional I.S. control input is suitable for safe output shutdown up to SIL 2. All outputs are short-circuit proof, galvanically isolated from the system and individually monitored to check for wire breakage/short-circuiting.

	IECEx / ATEX					
Zone	0	1	2	20	21	22
Ex interface	•	•	•	•	•	•
Installation in		•	•			

	NEC 500 CEC Appendix J					
	Class I		Class II		Class III	
Division	1	2	1	2	1	2
Ex interface	•	•	•	•	•	•
Installation in	•	•				

	CEC Section 18					
	NEC® 505			NEC® 506		
	Class I					
Zone	0	1	2	20	21	22
Ex interface	•	•	•			
Installation in		•	•			

Selection Table

Product variant: Digital output module with "Plant STOP"
Installation: Zone 1, Zone 2 and in the safe area

Open-circuit voltage U_o	Ex i output rated operation	Internal resistance of outputs	Product Type	Art. No.	Listprice €	PS	Weight kg
17.5 V	12.6 V/30 mA	170 Ω	9475/32-08-52	210655▲	653.00	22	0.275
23.5 V	17.5 V/20 mA	315 Ω	9475/32-08-62	210656▲	653.00	22	0.275

Please order terminals separately - see accessories and spare parts

Technical Data

Variant	9475/32-08-52	9475/32-08-62
Explosion Protection		
IECEx gas explosion protection	Ex ia [ia Ga] IIC T4 Gb	Ex ia [ia Ga] IIC T4 Gb
IECEx dust explosion protection	[Ex ia Da] IIIC	[Ex ia Da] IIIC
ATEX gas explosion protection	Ⓔx II 2 (1) G Ex ia [ia Ga] IIC T4 Gb	Ⓔx II 2 (1) G Ex ia [ia Ga] IIC T4 Gb
ATEX dust explosion protection	Ⓔx II (1) D [Ex ia Da] IIIC	Ⓔx II (1) D [Ex ia Da] IIIC
EAC gas explosion protection	Ex 1 Ex ia [ia Ga] IIC T4 Gb X	Ex 1 Ex ia [ia Ga] IIC T4 Gb X
EAC dust explosion protection	Ex [Ex ia Da] IIIC	Ex [Ex ia Da] IIIC
Certificates	ATEX (DEK), Brazil (ULB), Canada (FM), EAC (STV), IECEx (DEK), India (PESO), Korea (KTL), SIL (exida), USA (FM)	ATEX (DEK), Brazil (ULB), Canada (FM), EAC (STV), IECEx (DEK), India (PESO), Korea (KTL), SIL (exida), USA (FM)
Notes	CCC certificate available from 2021 onward	CCC certificate available from 2021 onward
Ship approval	EU RO MR	EU RO MR

Technical Data

Variant	9475/32-08-52	9475/32-08-62
Safety Data		
Maximum voltage U_o	19.4 V	25.7 V
Max. current I_o (Ex ia)	143 mA	107 mA
Max. current I_o (Ex ib)	37.8 mA	26.3 mA
Max. power P_o (Ex ia)	692 mW	688 mW
Max. power P_o (Ex ib)	506 mW	468 mW
Electrical Data		
Number of channels	8 Ex i outputs	8 Ex i outputs
Auxiliary Power		
Current consumption	250 mA	240 mA
Max. power consumption	6 W	5.8 W
Max. power dissipation outputs	4.8 W	4 W
Input		
Control input	Ex i control input X3	Ex i control input X3
Control input suitability	Switch-off up to SIL 2, low demand (IEC61508)	Switch-off up to SIL 2, low demand (IEC61508)
Control input function	"Plant STOP" to switch off all outputs	"Plant STOP" to switch off all outputs
Ambient Conditions		
Ambient temperature	-40°C ... +75°C	-40°C ... +75°C
Mechanical Data		
Degree of protection IP (IEC 60529)	IP20	IP20

Accessories

Figure	Description	Art. No.	Listprice €	PS	Weight kg
Pluggable terminal					
	2.5 mm² with lock, 16-pole, spring clamp connection, blue, for connecting the field signals to I/O modules, for intrinsically safe field circuits, incl. test jacks Labelling: 1 ... 16 Attention: An additional terminal is necessary for I/O module Series 9470 and 9482. Labelling: 17 ... 32	162695▲	17.30	Z2	0.028
Electronic relay					
	The electronic relay modules are used to switch from Ex e loads via intrinsically safe (Ex i) or non-intrinsically safe (Ex e) control. Coil circuit: Ex i or non-Ex i (Ex e)* Contact circuit: Non-Ex i (Ex e) *You can switch between Ex i and non-Ex i circuits, or vice-versa, at any time without restriction.	282457	266.00	29	0.110
Ex i/Ex e relay module for Zone 1					
	The Ex i/Ex e relay modules are used for the galvanically isolated switching of intrinsically safe circuits (Ex i) and non-Ex i (Ex e) electrical circuits. Coil circuit: Ex i or non-Ex i (Ex e)* Contact circuit: Ex i or non-Ex i (Ex e)* *You can switch between Ex i and non-Ex i circuits, or vice-versa, at any time without restriction	273000	266.00	29	0.110
Partition					
	For mounting between intrinsically safe and non-intrinsically safe connections of the I/O modules, in order to adhere to the required 50 mm distance	220101▲	2.50	Z2	0.010
Resistor error message suppression					
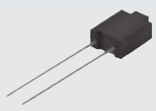	The resistors are used to suppress error messages for unused I/O channels Resistance value: 5K6 / 0.5 W Suitable for: AIM 9468; UMH 9469; DIOM 9470; DIOM 9471; DIOM 9472; DOM 9475 For intrinsically safe circuits (simple apparatus according to EN 60079-11)	244911	1.44	Z2	–

▲ Preferred products – in stock or available at short notice

Digital Output Module 8-Channel Version

Series 9475/32-08 for Zone 1 / Div. 1

Spare Parts

Figure	Description	Art. No.	Listprice €	PS	Weight kg
Warning sign					
	"Clean modules only with a damp cloth."	162796	80.90	E1	0.001
LED Indicator lamp Ex i					
	LED indicator lamp for intrinsically safe circuits 8010/3-02, Ex i	237972	98.80	E1	0.035
Labelling strips					
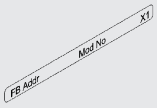	"FB Addr ... Mod No ..." for pluggable terminal, 26 pieces on the sheet	162788	150.00	E1	0.001
DIN A4 sheet					
	For the label plate on I/O modules, 6 labels per sheet Print IS Wizard, packaging unit = 20 sheets	162832	63.50	E1	0.001

Dimensional Drawings (All Dimensions in mm [inches]) – Subject to Alterations

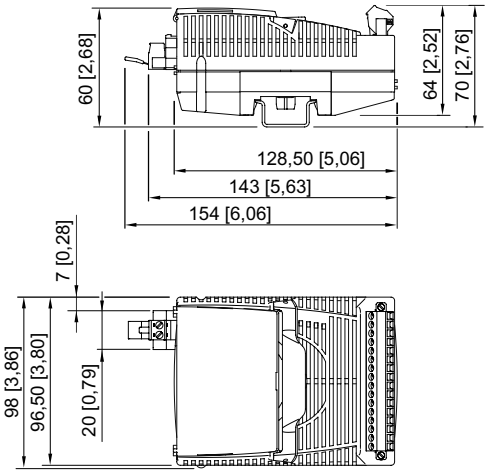



- 8 channels for I.S. solenoid valves up to 30 mA
- Intrinsically Safe outputs with line fault monitoring
- Module hot swap in Zone 2 and Class I, Div. 2

WebCode 9475D

9475/33-08 series digital output modules for Zone 2 and Class I, Div. 2 have eight channels for actuating I.S. solenoid valves or indicator lamps. All outputs are short-circuit proof, galvanically isolated from the system and individually monitored to check for wire breakage/short-circuiting.

	IECEx / ATEX					
Zone	0	1	2	20	21	22
Ex interface	•	•	•	•	•	•
Installation in			•			

	NEC 500 CEC Appendix J					
	Class I		Class II		Class III	
Division	1	2	1	2	1	2
Ex interface	•	•	•	•	•	•
Installation in		•				

	CEC Section 18 NEC® 505			NEC® 506		
	Class I					
Zone	0	1	2	20	21	22
Ex interface	•	•	•			
Installation in			•			

Selection Table

Installation	Zone 2 and in the safe area						
Open-circuit voltage U_a	Ex i output rated operation	Internal resistance of outputs	Product Type	Art. No.	Listprice €	PS	Weight kg
17.5 V	12.6 V/30 mA	170 Ω	9475/33-08-50	210657 ▲	528.00	22	0.275
23.5 V	17.5 V/20 mA	315 Ω	9475/33-08-60	210658 ▲	528.00	22	0.275

Please order terminals separately - see accessories and spare parts

Technical Data

Variant	9475/33-08-50	9475/33-08-60
Explosion Protection		
IECEx gas explosion protection	Ex ec ia [ia Ga] IIC T4 Gc	Ex ec ia [ia Ga] IIC T4 Gc
IECEx dust explosion protection	[Ex ia Da] IIIC	[Ex ia Da] IIIC
ATEX gas explosion protection	Ⓔx I 3 (1) G Ex ec ia [ia Ga] IIC T4 Gc	Ⓔx I 3 (1) G Ex ec ia [ia Ga] IIC T4 Gc
ATEX dust explosion protection	Ⓔx II (1) D [Ex ia Da] IIIC	Ⓔx II (1) D [Ex ia Da] IIIC
EAC gas explosion protection	[Ex] 2 Ex nA ia [ia Ga] IIC T4 Gc X	[Ex] 2 Ex nA ia [ia Ga] IIC T4 Gc X
EAC dust explosion protection	[Ex] [Ex ia Da] IIIC	[Ex] [Ex ia Da] IIIC
Certificates	ATEX (DEK), Brazil (ULB), Canada (FM), EAC (STV), IECEx (DEK), India (PESO), Korea (KTL), SIL (exida), USA (FM)	ATEX (DEK), Brazil (ULB), Canada (FM), EAC (STV), IECEx (DEK), India (PESO), Korea (KTL), SIL (exida), USA (FM)
Notes	CCC certificate available from 2021 onward	CCC certificate available from 2021 onward
Ship approval	EU RO MR	EU RO MR
Safety Data		
Maximum voltage U_o	19.4 V	25.7 V
Max. current I_o (Ex ia)	143 mA	107 mA

▲ Preferred products – in stock or available at short notice

Digital Output Module 8-Channel Version

Series 9475/33-08 for Zone 2 / Div. 2

Technical Data

Variant	9475/33-08-50	9475/33-08-60
Safety Data		
Max. current I_o (Ex ib)	37.8 mA	26.3 mA
Max. power P_o (Ex ia)	692 mW	688 mW
Max. power P_o (Ex ib)	506 mW	468 mW
Electrical Data		
Number of channels	8 Ex i outputs	8 Ex i outputs
Auxiliary Power		
Current consumption	250 mA	240 mA
Max. power consumption	6 W	5.8 W
Max. power dissipation outputs	4.8 W	4 W
Ambient Conditions		
Ambient temperature	-40°C ... +75°C	-40°C ... +75°C
Mechanical Data		
Degree of protection IP (IEC 60529)	IP20	IP20

Accessories

Figure	Description	Art. No.	Listprice €	PS	Weight kg
Pluggable terminal					
	2.5 mm² with lock, 16-pole, spring clamp connection, blue, for connecting the field signals to I/O modules, for intrinsically safe field circuits, incl. test jacks Labelling: 1 ... 16 Attention: An additional terminal is necessary for I/O module Series 9470 and 9482. Labelling: 17 ... 32	162695▲	17.30	Z2	0.028
Electronic relay					
	The electronic relay modules are used to switch from Ex e loads via intrinsically safe (Ex i) or non-intrinsically safe (Ex e) control. Coil circuit: Ex i or non-Ex i (Ex e)* Contact circuit: Non-Ex i (Ex e) *You can switch between Ex i and non-Ex i circuits, or vice-versa, at any time without restriction.	282457	266.00	29	0.110
Ex i/Ex e relay module for Zone 1					
	The Ex i/Ex e relay modules are used for the galvanically isolated switching of intrinsically safe circuits (Ex i) and non-Ex i (Ex e) electrical circuits. Coil circuit: Ex i or non-Ex i (Ex e)* Contact circuit: Ex i or non-Ex i (Ex e)* *You can switch between Ex i and non-Ex i circuits, or vice-versa, at any time without restriction	273000	266.00	29	0.110
Partition					
	For mounting between intrinsically safe and non-intrinsically safe connections of the I/O modules, in order to adhere to the required 50 mm distance	220101▲	2.50	Z2	0.010
Resistor error message suppression					
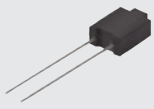	The resistors are used to suppress error messages for unused I/O channels Resistance value: 5K6 / 0.5 W Suitable for: AIM 9468; UMH 9469; DIOM 9470; DIOM 9471; DIOM 9472; DOM 9475 For intrinsically safe circuits (simple apparatus according to EN 60079-11)	244911	1.44	Z2	–

Spare Parts

Figure	Description	Art. No.	Listprice €	PS	Weight kg
Warning sign					
	"Clean modules only with a damp cloth."	162796	80.90	E1	0.001
LED Indicator lamp Ex i					
	LED indicator lamp for intrinsically safe circuits 8010/3-02, Ex i	237972	98.80	E1	0.035
Labelling strips					
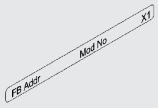	"FB Addr ... Mod No ..." for pluggable terminal, 26 pieces on the sheet	162788	150.00	E1	0.001
DIN A4 sheet					
	For the label plate on I/O modules, 6 labels per sheet Print IS Wizard, packaging unit = 20 sheets	162832	63.50	E1	0.001

Dimensional Drawings (All Dimensions in mm [inches]) – Subject to Alterations

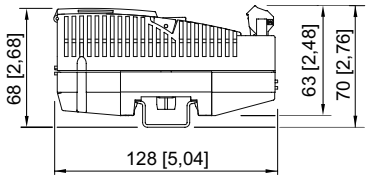

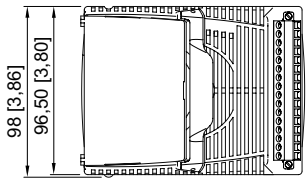

A4

Digital Output Module Valve for Zone 1 / Div. 1

Series 9478



- 8 channels for pneumatic valves
- Pneumatic outputs with integrated 3/2-way solenoid valves and SIL 2 Plant-Stop input
- Module hot swap in Zone 1 and Class I, Div. 1

WebCode 9478A

The 9478 series digital output module valve for Zone 1 and Class I, Div. 1 has eight channels for actuating pneumatic valves. The integrated 3/2-way solenoid valves are monitored to check for internal wire breakage and short-circuiting regardless of the drive status. An additional I.S. control input is suitable for safe output shutdown up to SIL 2. Operation in combination with I.S. I/O modules is permissible.

	IECEx / ATEX					
Zone	0	1	2	20	21	22
Installation in		•	•			

	NEC 500 CEC Appendix J					
	Class I		Class II		Class III	
Division	1	2	1	2	1	2
Installation in	•	•				

	CEC Section 18					
	NEC® 505			NEC® 506		
	Class I					
Zone	0	1	2	20	21	22
Installation in		•	•			

Selection Table

Product variant		Digital Output Module Valve for Zone 1					
Number of pneumatic valves	Pressure range min.	Max. pressure range	Product Type	Art. No.	Listprice €	PS	Weight kg
8 x 3/2-valves	2.5 bar	7 bar	9478/22-08-51	203599▲	1688.00	22	0.950

Technical Data

Explosion Protection	
IECEx gas explosion protection	Ex ib IIC T4
ATEX gas explosion protection	II 2 G Ex ib IIC T4
EAC gas explosion protection	1 Ex ib IIC T4 Gb X
Certificates	ATEX (PTB), Brazil (ULB), Canada (FM), EAC (STV), IECEx (PTB), Korea (KTL), SIL (exida), USA (FM)
Notes	CCC certificate available from 2021 onward
Ship approval	EU RO MR
Auxiliary Power	
Max. power consumption	5.75 W with activated pilot valves
Undervoltage monitoring	All outputs are depressurized
Input	
Control input suitability	Switch-off up to SIL 2, low demand (IEC61508)
Control input function	System OFF, outputs are depressurized
Device Specific Data	
Pneumatic data media	Compressed air oiled Dry Neutral gasses (5 µm filter received) Oil-free
Pneumatic data manual actuation	Yes

Technical Data	
Device Specific Data	
Pneumatic data switching times	Approx. 1000 c.p.m.
Pneumatic data Qn value	300 l/min
Pneumatic data Qn value note	at 20 °C air temperature, 6 bar at the valve inlet and 1 bar of differential pressure
Pneumatic connections	P, R: plug connector Ø 8 mm Y0 ... Y7: plug connector Ø 6 mm X: standard silencer (included in the delivery and already fitted)
Ambient Conditions	
Ambient temperature	0°C ... +60°C
Mechanical Data	
Degree of protection IP (IEC 60529)	IP20
Enclosure material	Polyamide 6GF
Sealing material	FPM, NBR
Material of valve block	PPS, PA

Dimensional Drawings (All Dimensions in mm [inches]) – Subject to Alterations

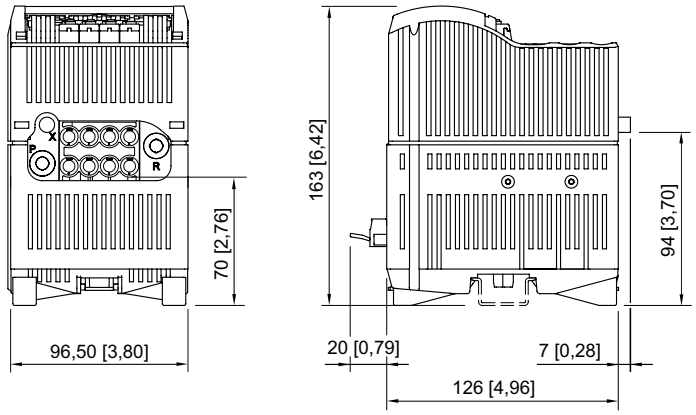

Temperature Input Module for Zone 1 / Div. 1

Series 9482/32



- 8 channels for resistance temperature detectors, potentiometers, thermocouples, mV sensors and joysticks
- Intrinsically Safe inputs with line fault monitoring and LED error indication per channel
- Module hot swap in Zone 1 and Class I, Div. 1

WebCode **9482A**

The series 9482 temperature input module for Zone 1 and Class I, Div. 1 has eight channels for the I.S. operation of resistance temperature detectors with two-, three- or four-wire connection and thermocouples. Sensors that comply with DIN, IEC and GOST are supported as well as resistance transmitters up to 10 kΩ and also joysticks for rapid four-channel operation. Earthed thermocouples can be connected. Cold junction compensation can be performed internally or externally.

	IECEx / ATEX					
Zone	0	1	2	20	21	22
Ex interface	•	•	•	•	•	•
Installation in		•	•			

	NEC 500 CEC Appendix J					
	Class I		Class II		Class III	
Division	1	2	1	2	1	2
Ex interface	•	•	•	•	•	•
Installation in	•	•				

	CEC Section 18 NEC® 505			NEC® 506		
	Class I					
Zone	0	1	2	20	21	22
Ex interface	•	•	•			
Installation in		•	•			

Selection Table

Installation	Zones 1, 2 and in the safe area				
Number of channels	Product Type	Art. No.	Listprice €	PS	Weight kg
8 or 4 Ex i inputs (depends on operating mode)	9482/32-08-11	217643▲	965.00	22	0.275

Please order 2 terminals separately - see accessories and spare parts

Technical Data

Explosion Protection	
IECEx gas explosion protection	Ex ia [ia Ga] IIC T4 Gb
IECEx dust explosion protection	[Ex ia Da] IIIC
ATEX gas explosion protection	II 2 (1) G Ex ia [ia Ga] IIC T4 Gb
ATEX dust explosion protection	II (1) D [Ex ia Da] IIIC
EAC gas explosion protection	1 Ex ia [ia Ga] IIC T4 Gb
EAC dust explosion protection	[Ex ia Da] IIIC
Certificates	ATEX (DEK), Brazil (ULB), Canada (FM), EAC (STV), IECEx (DEK), India (PESO), Korea (KTL), Russia (Meteorological certificate), USA (FM)
Ship approval	EU RO MR
Safety Data	
Notes	For proof of intrinsic safety, the safety data must be used in accordance with the combination of connections and the corresponding sensor. For further information and combination, see operating instructions.

Technical Data

Auxiliary Power	
Current consumption	42 mA
Max. power consumption	1 W
Max. power dissipation inputs	1 W
Input	
Compensation of reference junctions	Internal (adjustable parameters) External 3-wire circuit
Ambient Conditions	
Ambient temperature	-40°C ... +75°C
Mechanical Data	
Degree of protection IP (IEC 60529)	IP20

Connectable sensors see page 124

Accessories

Figure	Description	Art. No.	Listprice €	PS	Weight kg
External reference junction					
	External reference junction for 2 x thermocouple (1 x Pt100 for 2, 3 or 4 wire connection) integrated into the 4-pole terminal block. Installation takes place on the DIN rail.	160675	34.10	Z2	0.030
Pluggable terminal					
	2.5 mm² with lock, 16-pole, spring clamp connection, blue, for connecting the field signals to I/O modules, for intrinsically safe field circuits, incl. test jacks Labelling: 1 ... 16 Attention: An additional terminal is necessary for I/O module Series 9470 and 9482. Labelling: 17 ... 32	162695▲	17.30	Z2	0.028
	2.5 mm² with lock, 16-pole, spring clamp connection, blue for connecting the field signals to I/O modules, for intrinsically safe field circuits, incl. test jacks Labelling: 17 ... 32	162716▲	17.30	Z2	0.028
Partition					
	For mounting between intrinsically safe and non-intrinsically safe connections of the I/O modules, in order to adhere to the required 50 mm distance	220101▲	2.50	Z2	0.010
Resistor error message suppression					
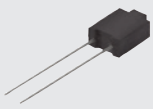	The resistors are used to suppress error messages for unused I/O channels Resistance value: 62R / 0.5 W Suitable for: AOM 9468; UMH 9469; DIOM 9472; TIM 9482	244912	1.44	Z2	–

Spare Parts

Figure	Description	Art. No.	Listprice €	PS	Weight kg
Warning sign					
	"Clean modules only with a damp cloth."	162796	80.90	E1	0.001

▲ Preferred products – in stock or available at short notice

Temperature Input Module for Zone 1 / Div. 1

Series 9482/32

Spare Parts

Figure	Description	Art. No.	Listprice €	PS	Weight kg
Labelling strips					
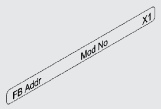	"FB Addr ... Mod No ..." for pluggable terminal, 26 pieces on the sheet	162788	150.00	E1	0.001
DIN A4 sheet					
	For the label plate on I/O modules, 6 labels per sheet Print IS Wizard, packaging unit = 20 sheets	162832	63.50	E1	0.001

Dimensional Drawings (All Dimensions in mm [inches]) – Subject to Alterations

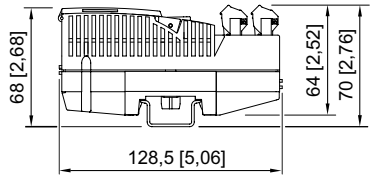

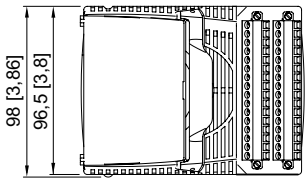



- 8 channels for resistance temperature detectors, potentiometers, thermocouples, mV sensors and joysticks
- Intrinsically Safe inputs with line fault monitoring and LED error indication
- Module hot swap in Zone 2 and Class I, Div. 2

WebCode 9482B

The series 9482 temperature input module for Zone 2 and Class I, Div. 2 has eight channels for the I.S. operation of resistance temperature detectors with two-, three- or four-wire connection and thermocouples. Sensors that comply with DIN, IEC and GOST are supported as well as resistance transmitters up to 10 kΩ and also joysticks for rapid four-channel operation. Earthed thermocouples can be connected. Cold junction compensation can be performed internally or externally.

	IECEx / ATEX					
Zone	0	1	2	20	21	22
Ex interface	•	•	•	•	•	•
Installation in			•			

	NEC 500 CEC Appendix J					
	Class I		Class II		Class III	
Division	1	2	1	2	1	2
Ex interface	•	•	•	•	•	•
Installation in		•				

	CEC Section 18 NEC® 505 Class I			NEC® 506		
Zone	0	1	2	20	21	22
Ex interface	•	•	•			
Installation in			•			

Selection Table

Installation	Zones 2 and in the safe area				
Number of channels	Product Type	Art. No.	Listprice €	PS	Weight kg
(depends on operating mode) 8 or 4 Ex i inputs	9482/33-08-10	217644▲	778.00	22	0.275

Please order 2 terminals separately - see accessories and spare parts

Technical Data

Explosion Protection	
IECEx gas explosion protection	Ex ec ia [ia Ga] IIC T4 Gb
IECEx dust explosion protection	[Ex ia Da] IIIC
ATEX gas explosion protection	Ⓔx I 3 (1) G Ex ec ia [ia Ga] IIC T4 Gb
ATEX dust explosion protection	Ⓔx II (1) D [Ex ia Da] IIIC
EAC gas explosion protection	Ex 2 Ex nA ia [ia Ga] IIC T4 Gc X
EAC dust explosion protection	Ex [Ex ia Da] IIIC
Certificates	ATEX (DEK), Brazil (ULB), Canada (FM), EAC (STV), IECEx (DEK), India (PESO), Korea (KTL), Russia (Meteorological certificate), USA (FM)
Ship approval	EU RO MR
Safety Data	
Notes	For proof of intrinsic safety, the safety data must be used in accordance with the combination of connections and the corresponding sensor. For further information and combination, see operating instructions.

Temperature Input Module for Zone 2 / Div. 2

Series 9482/33

Technical Data	
Auxiliary Power	
Current consumption	42 mA
Max. power consumption	1 W
Max. power dissipation inputs	1 W
Input	
Compensation of reference junctions	Internal (adjustable parameters) External 3-wire circuit
Ambient Conditions	
Ambient temperature	-40°C ... +75°C
Mechanical Data	
Degree of protection IP (IEC 60529)	IP20

Accessories

Figure	Description	Art. No.	Listprice €	PS	Weight kg
External reference junction					
	External reference junction for 2 x thermocouple (1 x Pt100 for 2, 3 or 4 wire connection) integrated into the 4-pole terminal block. Installation takes place on the DIN rail.	160675	34.10	Z2	0.030
Pluggable terminal					
	2.5 mm² with lock, 16-pole, spring clamp connection, blue, for connecting the field signals to I/O modules, for intrinsically safe field circuits, incl. test jacks Labelling: 1 ... 16 Attention: An additional terminal is necessary for I/O module Series 9470 and 9482. Labelling: 17 ... 32	162695 ▲	17.30	Z2	0.028
	2.5 mm² with lock, 16-pole, spring clamp connection, blue for connecting the field signals to I/O modules, for intrinsically safe field circuits, incl. test jacks Labelling: 17 ... 32	162716 ▲	17.30	Z2	0.028
Partition					
	For mounting between intrinsically safe and non-intrinsically safe connections of the I/O modules, in order to adhere to the required 50 mm distance	220101 ▲	2.50	Z2	0.010
Resistor error message suppression					
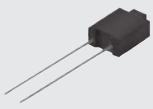	The resistors are used to suppress error messages for unused I/O channels Resistance value: 62R / 0.5 W Suitable for: AOM 9468; UMH 9469; DIOM 9472; TIM 9482	244912	1.44	Z2	–

Spare Parts

Figure	Description	Art. No.	Listprice €	PS	Weight kg
Warning sign					
	"Clean modules only with a damp cloth."	162796	80.90	E1	0.001
Labelling strips					
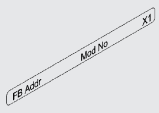	"FB Addr ... Mod No ..." for pluggable terminal, 26 pieces on the sheet	162788	150.00	E1	0.001

Spare Parts

Figure	Description	Art. No.	Listprice €	PS	Weight kg
DIN A4 sheet					
	For the label plate on I/O modules, 6 labels per sheet Print IS Wizard, packaging unit = 20 sheets	162832	63.50	E1	0.001

Dimensional Drawings (All Dimensions in mm [inches]) – Subject to Alterations

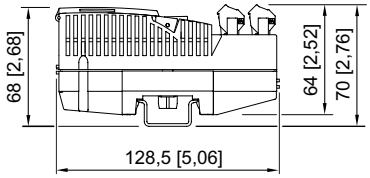

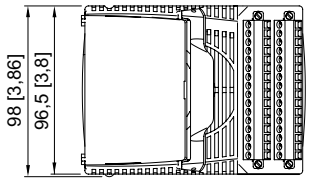

Ex i Inputs

Connectable resistance temperature detectors / resistance transmitters	Type	Reference	Measuring range (ITS-90)	Medium resolution
	Pt100	IEC 60751	-200 ... +850 °C	0.1 K
	Pt500	IEC 60751	-200 ... +850 °C	0.1 K
	Pt1000	IEC 60751	-200 ... +850 °C	0.1 K
	Ni100	DIN 43760	-60 ... +180 °C	0.1 K
	Ni500	DIN 43760	-60 ... +180 °C	0.1 K
	Ni1000	DIN 43760	-60 ... +180 °C	0.1 K
	Pt46	GOST 6651-94	-200 ... +1100 °C	0.15 K
	Pt50	GOST 6651-94	-200 ... +1100 °C	0.15 K
	Pt100	GOST 6651-94	-200 ... +1100 °C	0.1 K
	Cu53	GOST 6651-94	-50 ... +180 °C	0.1 K
	M50	GOST 6651-94	-200 ...+200 °C	0.15 K
	M100	GOST 6651-94	-200 ...+200 °C	0.1 K
	Resistance transmitter (3-wire)	--	0 ... 500 Ω	0.02 Ω
	Resistance transmitter (3-wire)	--	0 ... 2,5 kΩ	0.10 Ω
	Resistance transmitter (3-wire)	--	0 ... 5 kΩ	0.20 Ω
	Resistance transmitter (3-wire)	--	0 ... 10 kΩ	0.4 Ω
	Resistance transmitter (3-wire)	--	-200 ... +850 °C	0.1 K
	Joystick (4-wire)	--	500 ... 10 kΩ	

Connectable thermocouples / mV sensors	Type	Reference	Measuring range (ITS-90)	Medium resolution	Medium error of measurement with regard to measuring range
	B	IEC 60584-1	-400 ... +1800 °C	0.25 K	0.1 %
	E	IEC 60584-1	-200 ... +1000 °C	0.1 K	0.013 %
	J	IEC 60584-1	-200 ... +1200 °C	0.1 K	0.014 %
	K	IEC 60584-1	-200 ... +1370 °C	0.1 K	0.02 %
	N	IEC 60584-1	-200 ... +1300 °C	0.1 K	0.02 %
	R	IEC 60584-1	-50 ... +1767 °C	0.2 K	0.05 %
	S	IEC 60584-1	-50 ... +1767 °C	0.2 K	0.053 %
	T	IEC 60584-1	-200 ... +400 °C	0.1 K	0.042 %
	L	DIN 43710	-200 ... +900 °C	0.1 K	0.027 %
	U	DIN 43710	-200 ...+600 °C	0.1 K	0.038 %
	XK	GOST 8.585	-50 ...+800 °C	0.1 K	0.02 %
	mV	--	0 ... +100 mV	3.6 µV	0.01 %



- Redundant operation of IS1+ I/O modules
- Suitable for I/O modules with non-intrinsically safe I/O from firmware 4.xx
- Simple installation on DIN rail and connection via push-in terminals
- Installation in Zone 2

WebCode **9491A**

Type 9491/T1 termination boards and the corresponding type 9491/Z1 connection cables are accessories for the IS1+ Remote I/O system. The devices can be used in hazardous areas in Zone 2 as well as in safe areas, and are used for parallel switching of non-intrinsically safe field circuits of two IS1+ I/O modules of the same type (from firmware 4.xx) and thereby enable I/O redundancy.

	IECEx / ATEX					
Zone	0	1	2	20	21	22
Ex interface			•			
Installation in			•			

Selection Table					
Product Description	Remote I/O IS1+ Termination Board For Zone 2				
Number of channels	Product Type	Art. No.	Listprice €	PS	Weight kg
8	9491/T1-08-02	273018	88.00	Z2	0.250

Technical Data	
Explosion Protection	
IECEx gas explosion protection	Ex ec IIC T4 Gc
ATEX gas explosion protection	II 3 G Ex ec IIC T4 Gc
Certificates	ATEX (TUR), IECEx (TUR)
Electrical Data	
Signal types	Analog Input/Output
Type of signal	2-wire AI/AO 3-, 4-wire AI
Number of channels	8
Auxiliary Power	
Auxiliary power	Without
Input	
Input	primary, redundant
Function	Connection to I/O Modules
Compatible I/O modules	9469/35
Number of connections	2
Number of required connection cables	2

Termination Board
Series 9491

Technical Data	
Output	
Output	Simplex
Function	Connection to Field Device
Number of connections	2
Ambient Conditions	
Ambient temperature	-40 °C ... +75 °C
Mechanical Data	
Degree of protection IP (IEC 60529)	IP20
Module enclosure	Polyamide 6GF
Mounting / Installation	
Mounting type	NS35/15, NS35/7.5 DIN rail
Connection type	Push-In Terminals 12-pole
Connection type 2	Sub-D socket 24-pole screw locking

Accessories

Figure	Description	Art. No.	Listprice €	PS	Weight kg
Connecting cable					
	The connection cables are used for the connection between the redundant I/O modules and the termination board. Cable length: 0.5 m	276888	125.00	Z2	0.120

Dimensional Drawings (All Dimensions in mm [inches]) – Subject to Alterations

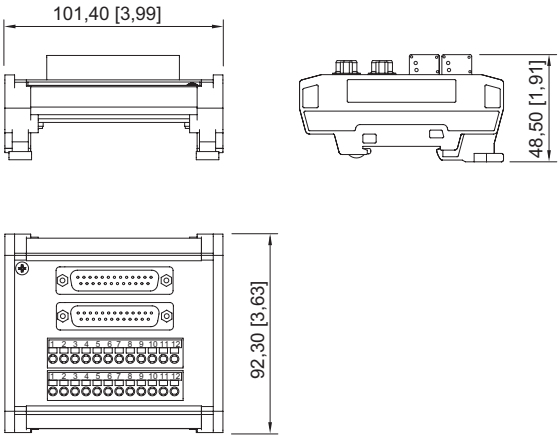

Type 9491/T1-08-02



- For the internal electrical connection between CPU & power module and 8 I/O modules for Zone 1 and Class I, Div. 1 or 16 I/O modules for Zone 2 and Class I, Div. 2
- Redundant data bus, power bus with high availability
- Simple, protected installation in NS35/15 DIN hat rails
- Passive component with redundancy and high availability

WebCode 9494A

The series 9494 bus rails are used as a backplane bus for the IS1+ remote I/O system. They include an I.S. power bus boasting high availability, a redundant I.S. data bus and address lines. The bus rails are available for 2 or 4 modules and can be combined for up to 18 slots. The BusRail extension cable can be used to place BusRail segments anywhere in the field enclosure.

	IECEx / ATEX					
Zone	0	1	2	20	21	22
Installation in		•	•			

	NEC 500 CEC Appendix J					
	Class I		Class II		Class III	
Division	1	2	1	2	1	2
Installation in	•	•				

	CEC Section 18					
	NEC® 505 Class I			NEC® 506		
Zone	0	1	2	20	21	22
Installation in		•	•			

Selection Table

Figure	Version	Product Type	Art. No.	Listprice €	PS	Weight kg
Product variant	Remote I/O IS1+ BusRail					
	For 2 modules, beginning	9494/S1-B2	261798▲	75.30	22	0.062
	For 2 modules, end	9494/S1-E2	261799▲	75.30	22	0.062
	For 4 modules	9494/S1-M4	261800▲	121.50	22	0.100
Product variant	Remote I/O IS1+ BusRail connecting line					
Figure	Version	Product Type	Art. No.	Listprice €	PS	Weight kg
	110 cm	9494/L1-V8	261796▲	219.00	22	0.260
Product variant	Remote I/O IS1+ BusRail end piece					
Figure	Version	Product Type	Art. No.	Listprice €	PS	Weight kg
	Beginning	9494/A1-B0	261933	14.20	22	0.044

▲ Preferred products – in stock or available at short notice

Selection Table

Product variant		Remote I/O IS1+ BusRail end piece				
Figure	Version	Product Type	Art. No.	Listprice €	PS	Weight kg
	End	9494/A1-E0	261934	14.20	22	0.044

A4

Technical Data

Explosion Protection	
IECEx gas explosion protection	Ex ia IIC T4 Gb
ATEX gas explosion protection	II 2 G Ex ia IIC T4 Gb
EAC gas explosion protection	1 Ex ia IIC T4 Gb X
Certificates	ATEX (PTB), Canada (FM), EAC (Sertium), IECEx (PTB), Korea (KTL), USA (FM)
Notes	CCC certificate available from 2021 onward
Electrical Data	
Engineering note	The BusRail is available in lengths for 2 or 4 modules. One end piece each is necessary at the beginning and the end. The end pieces are available as "BusRail beginning" and "BusRail end" as well as with an integrated connecting line. The connecting line allows for multiple BusRail segments to be set up in one enclosure.
Ambient Conditions	
Ambient temperature	-40°C ... +75°C

Dimensional Drawings (All Dimensions in mm [inches]) – Subject to Alterations

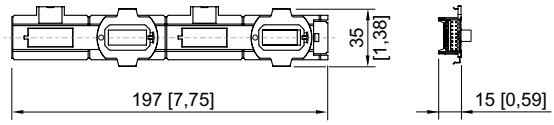

BusRail, beginning

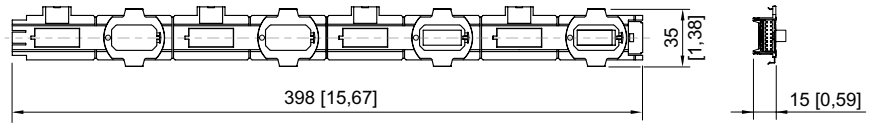

BusRail, centre

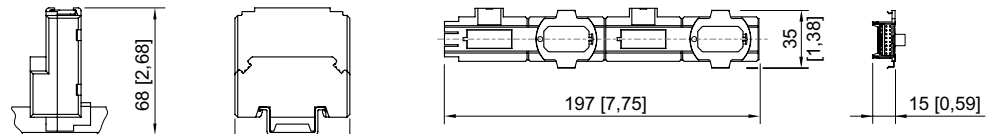

BusRail, end

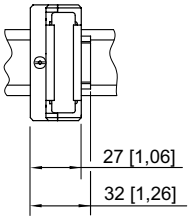

BusRail end piece beginning / end

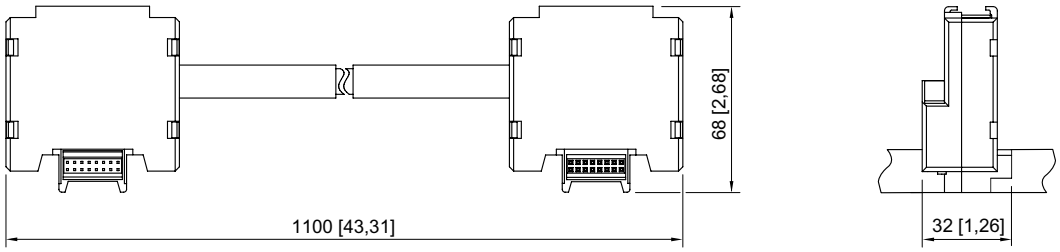

BusRail extension

Standard Enclosure Zone 1 for Remote I/O

Series 8150

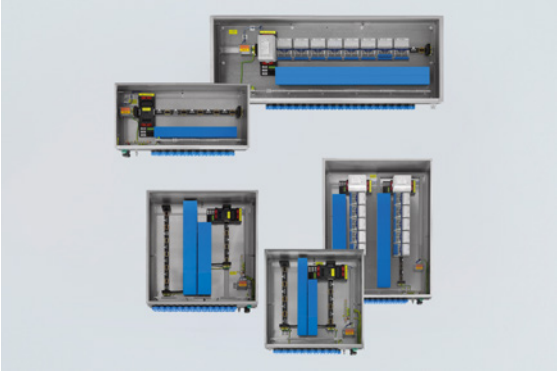

- Short delivery times (no more than 3 weeks)
- Can be used in Zone 1 without acceptance or certification
- For 24 V DC und 120/230 V AV
- Prefabricated and ready for use with entries, bus rails, connection terminals, etc.
- Modifications, add-ons and customer-specific adaptations possible

A4

WebCode 8150D

With the IS1+ standard enclosures for Zone 1, we offer you a variety of prefabricated field enclosures made from stainless steel 1.4301 (V2A). They include all entries, bus rails, cable ducts, CPM sockets and connection terminals for auxiliary power.
Once the IS1+ components (available separately) have been installed, the enclosures can be used in Zone 1 without acceptance, and they fulfil the requirements of EN 61439.

	IECEx / ATEX					
Zone	0	1	2	20	21	22
Installation in		•				

Selection Table

Installation	Zone 1					
Dimensions (WxHxD)	Built-in unit 1	Product Type	Art. No.	Listprice €	PS	Weight kg
400 x 750 x 300 mm	1 x BusRail for 6 slots (1 x CPM, 5 x I/O – modules)	8150/5-0400-0750-300-2321	282642 ▲	2417.00	22	30.000
400 x 1300 x 300 mm	1 x BusRail for 10 slots (1 x CPM, 8 x I/O – modules)	8150/5-0400-1300-300-2321	282460 ▲	3497.00	22	50.000
600 x 600 x 230 mm	1 x BusRail for 8 slots (1 x CPM, 7 x I/O – modules)	8150/5-0600-0600-230-2321	244142 ▲	2637.00	22	35.000
760 x 760 x 300 mm	1 x BusRail for 10 slots (1 x CPM, 8 x I/O – modules)	8150/5-0760-0760-300-2321	244144 ▲	3497.00	22	55.000
800 x 1000 x 300 mm	2 x BusRail for 2x8 slots (2 x CPM, 14 x I/O – modules)	8150/5-0800-1000-300-2321	244146 ▲	4124.00	22	70.000

Technical Data

Explosion Protection	
IECEx gas explosion protection	Ex db eb ib [ia Ga, ib] IIC T4 Gb
ATEX gas explosion protection	II 2 (1) G Ex db eb ib [ia Ga, ib] IIC T4 Gb
EAC gas explosion protection	1Ex d e ib [ia Ga, ib]
Certificates	ATEX (PTB), EAC (LPE), IECEx (PTB)
Auxiliary Power	
Auxiliary power rated operating voltage	230 V AC (90 ... 253 V AC) 24 V DC (20 ... 35 V DC)
Auxiliary power nominal current	max. 2.5 A @ 24 V DC max 0.5A @230 V AC
Auxiliary power rated current	Depending on installed modules IS1+ (see corresponding data sheet)

Technical Data	
Ambient Conditions	
Ambient temperature	-20°C ... +55°C
Mechanical Data	
Degree of protection IP (IEC 60529)	IP65
Enclosure material	1.4301 stainless steel, (V2A, AISI 304) brush finished

A4

Dimensional Drawings (All Dimensions in mm [inches]) – Subject to Alterations

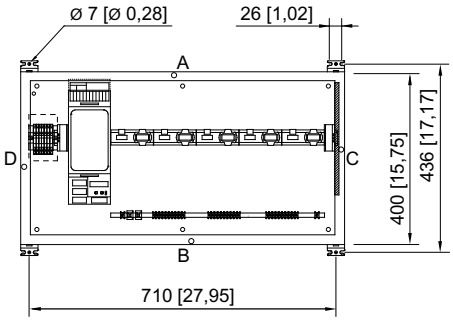

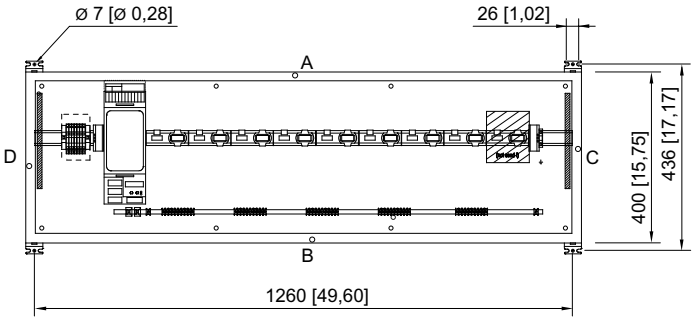

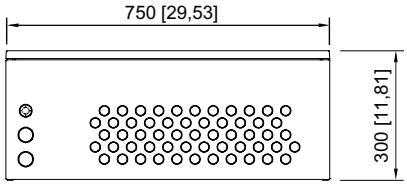

1 x BusRail for 6 slots
Art. No. 282462

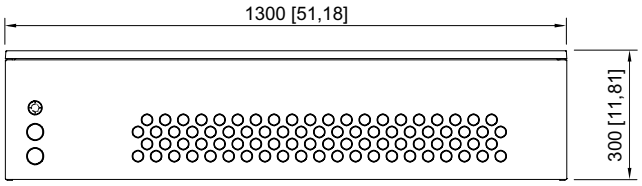

1 x BusRail for 10 slots
Art. No. 282460

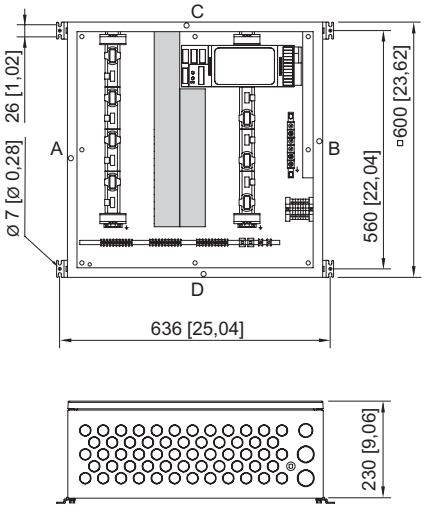

1 x BusRail for 8 slots
Art. No. 244142

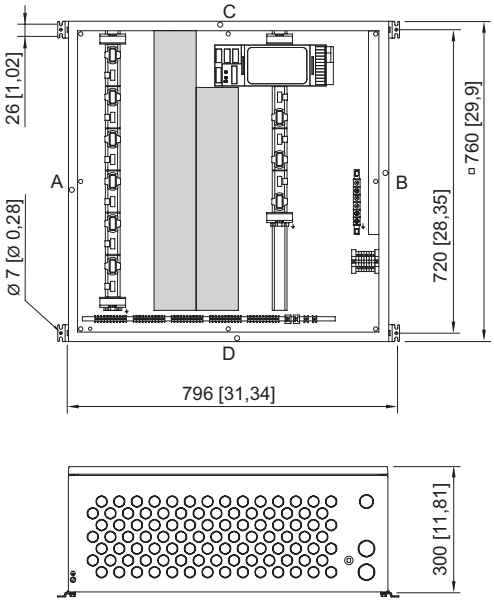

1 x BusRail for 10 slots
Art. No. 244144

A4

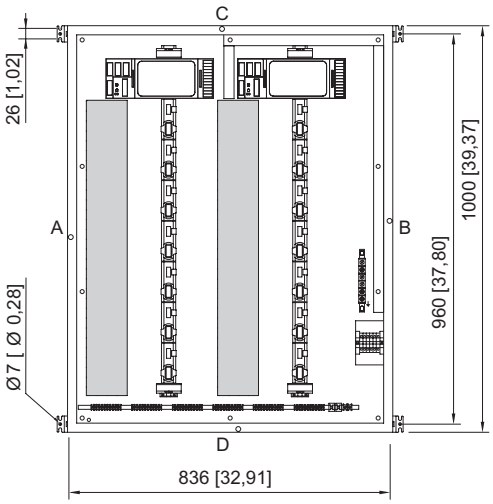

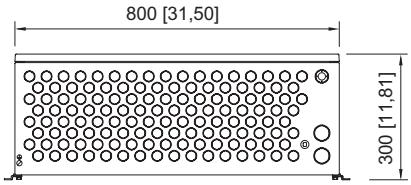

2 x BusRail for 2x8 slots
Art. No. 244146



- Short delivery times (no more than 3 weeks)
- Can be used in Zone 2 without acceptance or certification
- Prefabricated and ready for use with entries, bus rails, connection terminals, etc.
- Modifications, add-ons and customer-specific adaptations possible

WebCode **7145F**

With the IS1+ standard enclosures for Zone 2, we offer you a variety of prefabricated field enclosures made from stainless steel 1.4301 (V2A). They include all entries, bus rails, cable ducts and connection terminals for auxiliary power.
Once the IS1+ components (available separately) have been installed, the enclosures can be used in Zone 2 without acceptance, and they fulfil the requirements of EN 61439.

	IECEx / ATEX					
Zone	0	1	2	20	21	22
Installation in			•			

Selection Table

Installation	Zone 2					
Dimensions (WxHxD)	Built-in unit 1	Product Type	Art. No.	Listprice €	PS	Weight kg
400 mm x 750 mm x 300 mm	1 x BusRail for 6 slots (1 x CPM, 5 x I/O – modules)	7145/54-0400-0750-0300	282643	2080.00	22	25.000
400 mm x 1300 mm x 300 mm	1 x BusRail for 10 slots (1 x CPM, 9 x I/O – modules)	7145/54-0400-1300-0300	282461▲	3096.00	22	30.000
600 mm x 600 mm x 230 mm	1 x BusRail for 8 slots (1 x CPM, 7 x I/O – modules)	7145/54-0600-0600-0230	260146	2288.00	22	35.000
760 mm x 760 mm x 300 mm	1 x BusRail for 12 slots (1 x CPM, 11 x I/O – modules)	7145/54-0760-0760-0300	260148	3129.00	22	55.000
800 mm x 1000 mm x 300 mm	1 x BusRail for 16 slots (1 x CPM, 15 x I/O – modules)	7145/54-0800-1000-0300	260149	3474.00	22	70.000

Technical Data

Explosion Protection	
IECEx gas explosion protection	Ex ec ia ib [ia Ga, ib] IIC T4 Gc
ATEX gas explosion protection	Ⓔx II 3 (1) G Ex ec ia ib [ia Ga, ib] IIC T4 Gc
EAC gas explosion protection	[Ex] 2 (0) Ex ec ia ib [ia Ga, ic]
Auxiliary Power	
Auxiliary power rated operating voltage	24 V DC (20 ... 35 V DC)
Auxiliary power nominal current	max. 4 A @ 24 V DC
Auxiliary power rated current	Depending on installed modules IS1+ (see corresponding data sheet)
Ambient Conditions	
Ambient temperature	-40°C ... +55°C

▲ Preferred products – in stock or available at short notice

Technical Data

Mechanical Data	
Degree of protection IP (IEC 60529)	IP65
Enclosure material	1.4301 stainless steel, (V2A, AISI 304) brush finished

Dimensional Drawings (All Dimensions in mm [inches]) – Subject to Alterations

A4

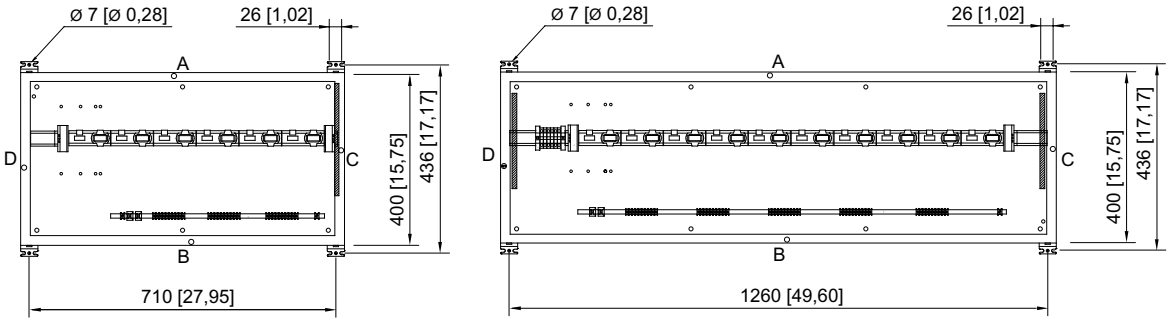

1 x BusRail for 6 slots
Art. No. 282643

1 x BusRail for 10 slots
Art. No. 282461

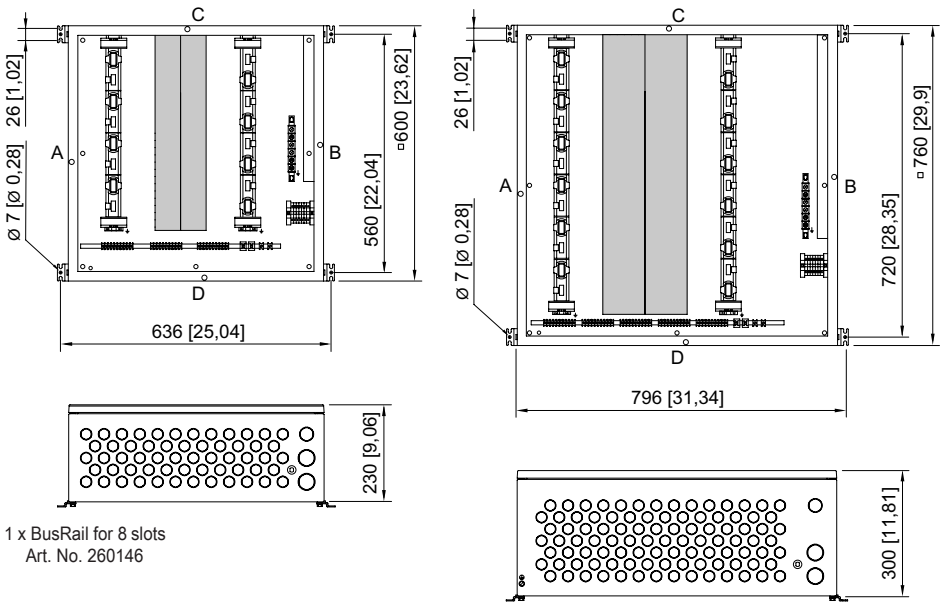

1 x BusRail for 8 slots
Art. No. 260146

1 x BusRail for 12 slots
Art. No. 260148

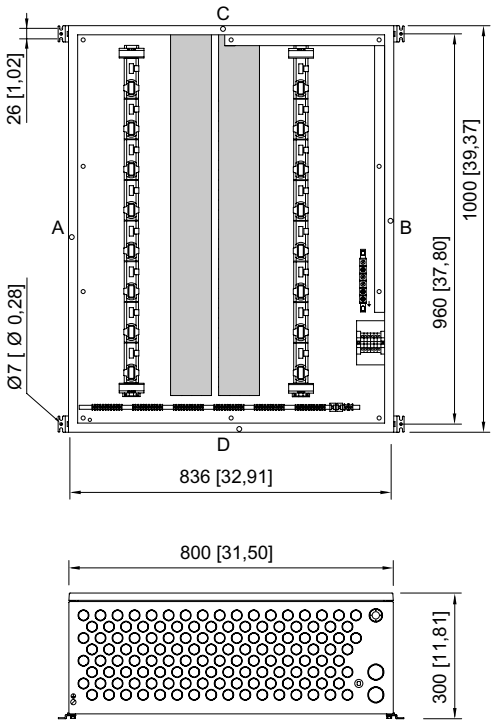

1 x BusRail for 16 slots
Art. No. 260149

NETWORK TECHNOLOGY

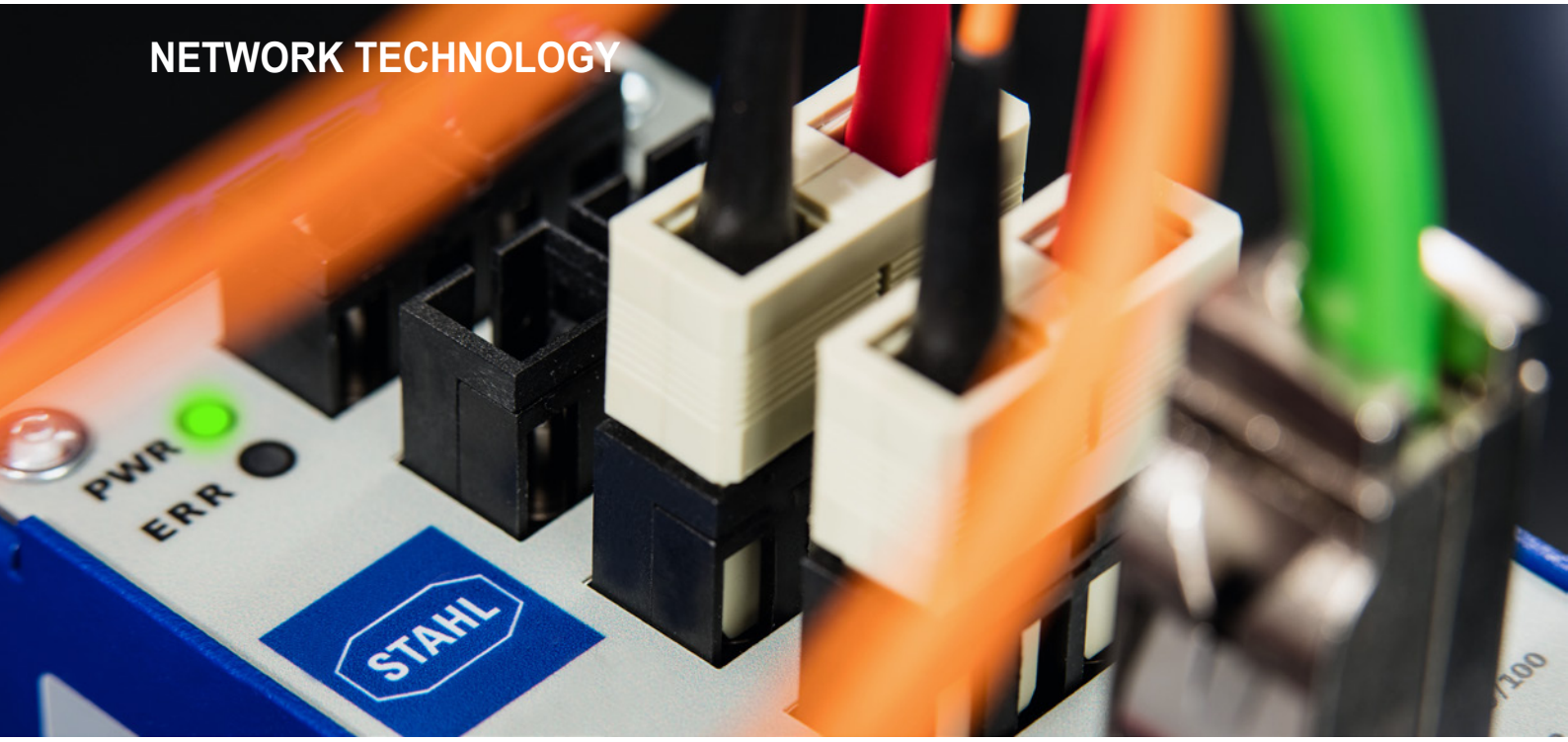

Product	Installation in Zone						Series	Page	WebCode
	0	1	2	20	21	22			
Coax Bushing									
Coax Bushing		•	•		•	•	9731	143	9731A
Connection Technology for Data Networks									
Ethernet Terminal for Use in Zone 1		•	•				8187	155	8187A
Optical Fibre Splice Cassette for Use in Zone 1		•	•				8186	153	8186A
General Network Technology									
Overview of the Portfolio for Fieldbus and Ethernet Networks								137	
HFisolator									
HFisolator inclusive Ex d Bushing		•	•		•	•	9730	139	9730A
HFisolator separately			•			•	9730	141	9730B
Isolating Repeater for Profibus / Modbus RTU									
Fieldbus Isolating Repeater			•				9185/12	151	9185B
Fieldbus Isolating Repeater with an Intrinsically Safe Interface			•				9185/11	149	9185A
Media Converter									
Media Converter			•				9721	145	9721A
Unmanaged Switch			•				9721	147	9721B

For additional products and information please refer to r-stahl.com

Overview of the Portfolio for Ethernet Networks

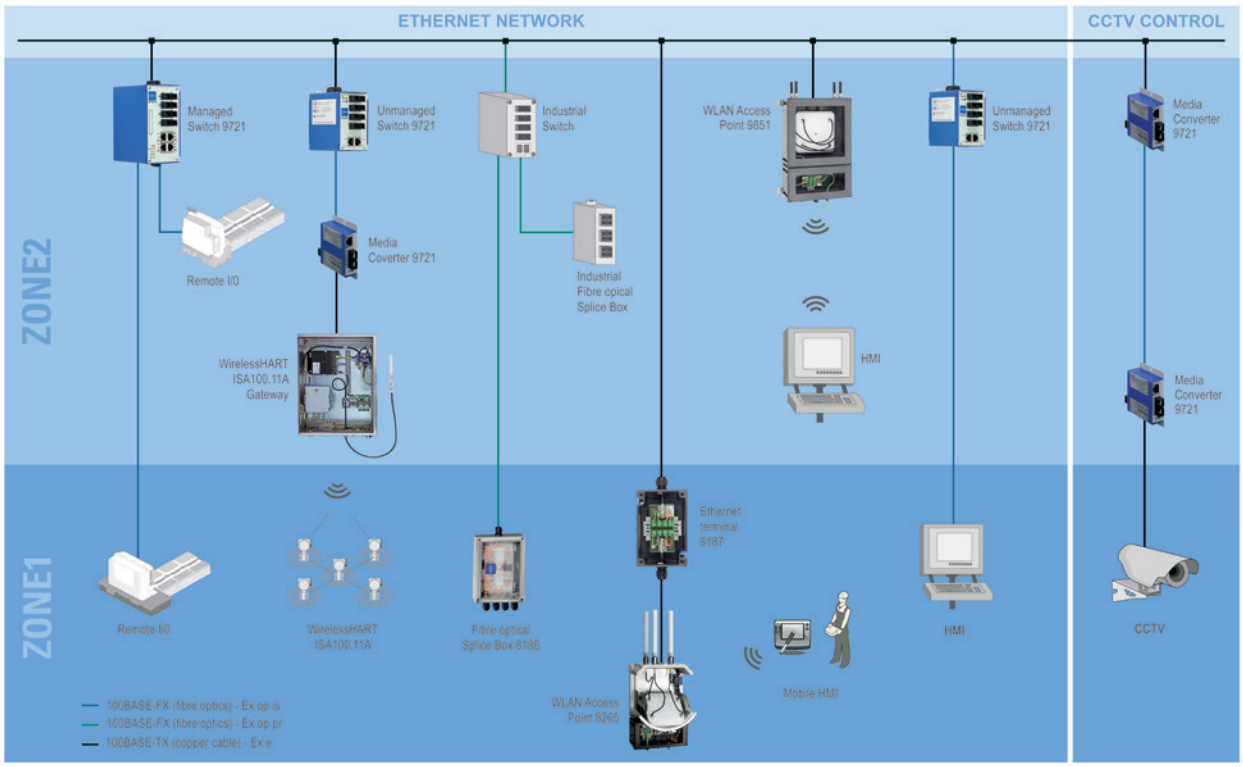

Wireless Technology in Process Automation

Application of wireless technology in the process industry offers new possibilities for plant operators to optimise production processes and to follow entirely new paths. This opens up a wide field of applications with a variety of solutions for the operator. R. STAHL takes this trend into account in various ways.

You have a wireless modem without Ex-approval and you want to use it in a hazardous area? Based on components like the HF isolator, we will take your wireless solution into the hazardous area. The HF isoator converts common wireless signals into explosion-protected, intrinsically safe wireless signals. The signals are galvanically separated and transmitted between input and output. R. STAHL also offers individual solutions to equip standard Wi-Fi access points for use in Zone 1 or Zone 2.

Ethernet in Process Automation

Increased safety 'e' type of protection in accordance with IEC/EN 60079-7 can be used to install your equipment in hazardous areas. A certified 8187 series Ethernet terminal for transmission rates of up to 1 Gbit/sec (1000Base-T) is available for convenient connection in a Zone 1 Ex e enclosure. For Ethernet installations over long distances and/or in environments where there may be significant interference or other influences, fibre optic cables are the best choice. R. STAHL offers a number of solutions for hazardous areas in this regard: By using the 'op is' type of protection in accordance with IEC/EN 60079-28, fibre optic cables can be routed into Zone 0 areas in a similar way to intrinsically safe circuits, which means that cables can be connected and disconnected during operation. The 9721 series media converters and switches are certified for installation in Zone 2 with up to four fibre optic cable connections for Zone 0. You can choose between multi-mode or, for distances of up to 30 km, single-mode connections. Alternatively, the 'op pr' type of protection – which is based on increased safety 'e' – can also be used in Zone 1. The Zone 1-certified 8186/1 series splice cassette is installed in an Ex e enclosure and can be equipped with up to 12 fibre optic cables.

Communication Protocols Modbus RTU and Profibus DP

The Modbus RTU and Prodibus DP communication protocols are proven technologies in the world of process automation. Both technologies are ideal for transmitting data in bandwidths that exceed the capacity of fieldbuses such as Profibus PA or FF H1.

For use in hazardous areas (especially Zone 1): The explosion protection type intrinsic safety 'i' is ideal for transmission over copper conductors and the explosion protection type inherently safe optical radiation 'op' is ideal for transmission over fibre optics.

The advantage of both intrinsic safety and inherently safe optical radiation is that the plug connectors can be connected or disconnected without deactivating the communication nodes. In addition, plug connectors that largely correspond to proven plug connectors in industrial areas. R. STAHL offers a series of isolating repeaters that lets you create network topologies, based on either copper conductors or fibre optics. If necessary, we can even offer solutions for radio transmission areas.

All solutions feature easy installation and operation. The fibre optic isolating repeaters can be used to create redundant point-to-point, line or ring structures to ensure high availability of communication.



- Allows you to use standard industrial antennas and standard coaxial plug connectors in hazardous areas
- Flexible, can be used in a very wide temperature range
- Enables project-specific wireless solutions

WebCode 9730A

The 9730 series HFisolator converts standard radio signals into intrinsically safe radio signals so that standard industrial antennas and coaxial plug connectors can be used in hazardous areas. This allows for the development of project-specific solutions with explosion proof housing for radio devices, which differ only slightly from standard industrial solutions in terms of the way they are used.

	IECEx / ATEX					
Zone	0	1	2	20	21	22
Ex interface	•	•	•	•	•	•
Installation in		•	•		•	•

	NEC 500 CEC Appendix J					
	Class I		Class II		Class III	
Division	1	2	1	2	1	2
Ex interface	•		•			
Installation in	•		•			

Selection Table

Frequency	500 MHz ... 6 GHz				
Thread size	Product Type	Art. No.	Listprice €	PS	Weight kg
M25	9730/37-25	258159▲	406.70	75	0.400

Technical Data

Explosion Protection	
IECEx gas explosion protection	Ex db mb [ia Ga] IIA/IIB/IIC T6...T5 Gb
IECEx dust explosion protection	Ex mb tb [ia Da] IIIC T80°C ... T100 °C Db
IECEx firedamp protection	Ex db mb [ia Ma] I Mb
ATEX gas explosion protection	Ⓔx II 2 (1) G Ex db mb [ia Ga] IIA/IIB/IIC T6...T5 Gb
ATEX dust explosion protection	Ⓔx II 2 (1) D Ex mb tb [ia Da] IIIC T80°C ... T100 °C Db
ATEX firedamp protection	Ⓔx I M2 (M1) Ex db mb [ia Ma] I Mb
Certificates	ATEX (TUV CY), Canada / USA (QPS), IECEx (TUN)
Electrical Data	
Insertion loss	typical **Frequency band** Universal **Frequency** 500 MHz 1.3 dB 1.4 GHz 0.6 dB 1.7 GHz 0.6 dB 2.5 GHz 0.6 dB 3.9 GHz 1.2 dB 4.9 GHz 1.2 dB 5.4 GHz 0.8 dB 6 GHz 2 dB

▲ Preferred products – in stock or available at short notice

HFisolator

Series 9730 inclusive Ex d Bushing

Technical Data	
Electrical Data	
Inside plug connector	RP-SMA plug
Outside plug connector	N-type socket
Ambient Conditions	
Ambient temperature	-40 °C ... +65 °C
Storage temperature	-40 °C ... +85 °C
Mechanical Data	
Degree of protection (IP)	IP65
Material	Stainless steel

Dimensional Drawings (All Dimensions in mm [inches]) – Subject to Alterations

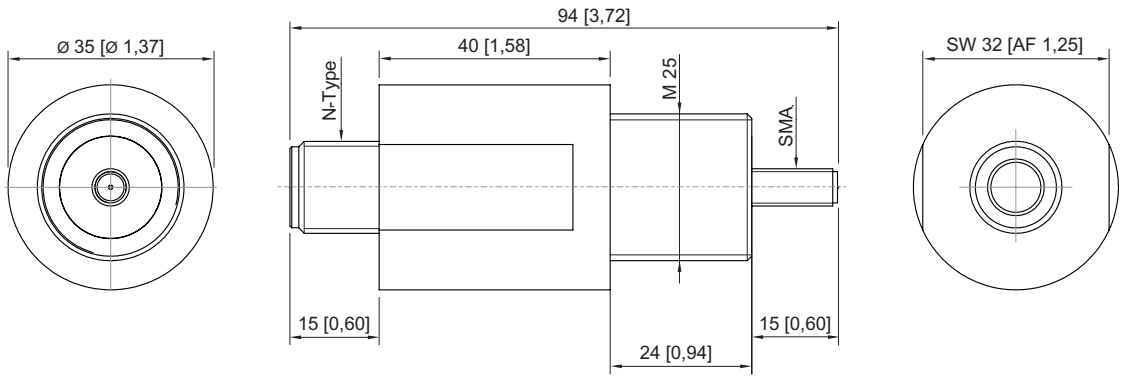

Type 9730/37-25

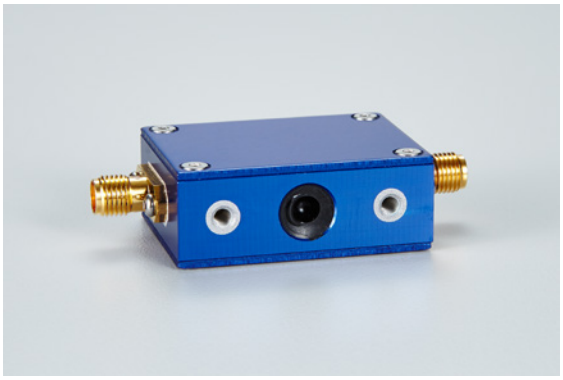

- Enables standard industrial antennas and coaxial plug connectors to be used in hazardous areas
- Can be used flexibly across an extremely wide temperature range
- Enables project-specific wireless solutions

WebCode 9730B

The 9730 series HFisolator converts standard radio signals into intrinsically safe radio signals so that standard industrial antennas and coaxial plug connectors can be used in hazardous areas. This allows for the development of project-specific solutions with Ex d / flameproof encapsulation of radio devices, which differ only slightly from standard industrial solutions in terms of the way they are used.

	IECEx / ATEX					
Zone	0	1	2	20	21	22
Ex interface	•	•	•	•	•	•
Installation in			•			•

Selection Table

Product Description	HFisolator					
Frequency	Product Type	Art. No.	Listprice €	PS	Weight kg
150 MHz ... 8 GHz	9730/26-11	256497 ▲	263.20	75	0.100

Technical Data

Explosion Protection	
IECEx gas explosion protection	Ex nA [Ex ia Ga] IIC T6 Gc
IECEx dust explosion protection	Ex ic [Ex ia Da] IIIC T85 °C Dc
IECEx firedamp protection	Ex [Ex ia Ma] I
ATEX gas explosion protection	Ⓔx II 3 (1) G Ex nA [Ex ia Ga] IIC T6 Gc
ATEX dust explosion protection	Ⓔx II 3 (1) D Ex ic [Ex ia Da] IIIC T85 °C Dc
ATEX firedamp protection	Ⓔx I (M1) Ex [Ex ia Ma] I
Certificates	ATEX (EMT), IECEx (EMT)
Electrical Data	
Insertion loss	(at 20 °C ambient conditions) **Frequency band** 150 MHz ... 1 GHz 0.3 dB 1 GHz ... 3.5 GHz 0.46 dB 3.5 GHz ... 6 GHz 1.09 dB 6 GHz ... 8 GHz 1.41 dB **Frequency** 400 MHz 0.12 dB 900 MHz 0.16 dB 2.45 GHz 0.48 dB 5.5 GHz 1.28 dB

▲ Preferred products – in stock or available at short notice

Technical Data

Ambient Conditions	
Ambient temperature	-40 °C ... +80 °C
Storage temperature	-40 °C ... +80 °C
Relative humidity max.	< 95%
Mechanical Data	
Degree of protection (IP)	IP40
Material	Anodized aluminium
Mounting / Installation	
Connection type	SMA female

Accessories

Figure	Description	Art. No.	Listprice €	PS	Weight kg
Coax bushing					
	Thread: M20 Connector Inside: SMA female Outside: N-type socket	249456▲	224.10	75	0.400

Dimensional Drawings (All Dimensions in mm [inches]) – Subject to Alterations

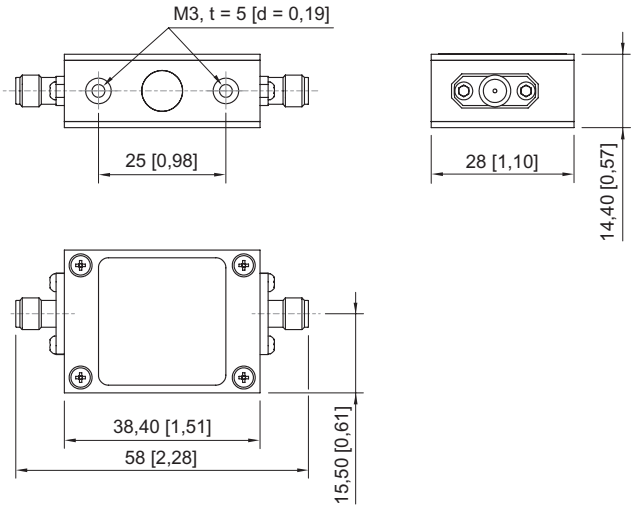



- Connection of standard antennas in Zones 1, 2, 21 and 22 (in conjunction with 9730/26-11)
- Quick and easy installation
- Suitable for extreme industrial environments – IP66 degree of protection, temperature range -60 to +150 °C

A5

WebCode 9731A

The 9731 series coaxial bushing perfectly complements our HF isolator (9730/26-11), as it enables standard antennas to be connected in Zone 1, 2, 21 and 22 hazardous areas with its standard type N plug connector. It can be installed quickly and easily, is compact and robust, and can also be used for offshore applications.

	IECEx / ATEX					
Zone	0	1	2	20	21	22
Installation in		•	•		•	•

	NEC 500 CEC Appendix J					
	Class I		Class II		Class III	
Division	1	2	1	2	1	2
Installation in	•		•			

Selection Table

Product Description		Coax bushing						
Frequency	Inside plug connector	Outside plug connector	Thread size	Product Type	Art. No.	Listprice €	PS	Weight kg
150 MHz ... 8 GHz	SMA female	N-type socket	M20	9731/110-1	249456▲	224.10	75	0.400

Technical Data

Explosion Protection	
IECEx gas explosion protection	Ex d IIC Gb
IECEx dust explosion protection	Ex tb IIIC Db
IECEx firedamp protection	Ex d I Mb
ATEX gas explosion protection	Ⓔx II 2 G Ex d IIC Gb
ATEX dust explosion protection	Ⓔx II 2 D Ex tb IIIC Db
ATEX firedamp protection	Ⓔx I M2 Ex d I Mb
Certificates	ATEX (TRC), Canada / USA (MET), IECEx (TRC)
Electrical Data	
Insertion loss	**Frequency band** Universal **Frequency** 150 MHz 0.1 dB 450 MHz 0.22 dB 900 MHz 0.25 dB 2.4 GHz 0.5 dB 5 GHz 0.8 dB
Ambient Conditions	
Ambient temperature	-60 °C ... +150 °C
Storage temperature	-60 °C ... +150 °C
Relative humidity max.	0 to 95%, non-condensing

▲ Preferred products – in stock or available at short notice

Coax Bushing
Series 9731

Technical Data

Mechanical Data	
Degree of protection (IP)	IP65
Material	Stainless steel

Accessories

Figure	Description	Art. No.	Listprice €	PS	Weight kg
HFisolator					
	Converts a standard wireless signal into an intrinsically safe signal . Frequency range; 150 MHz ... 8 GHz	256497 ▲	263.20	75	0.100

Dimensional Drawings (All Dimensions in mm [inches]) – Subject to Alterations

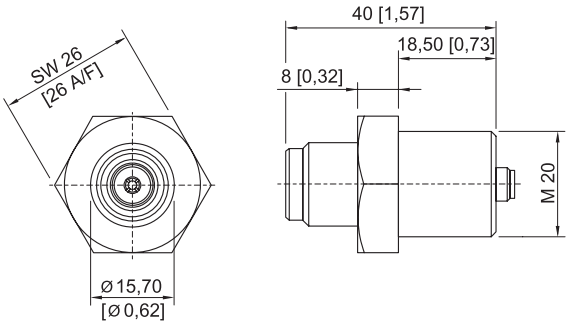



- For 100 Mbit/s Ethernet with inherently safe "op is" fiber optic in Zone 0, 1 or 2 and Class I, II, III Div.1 or 2
- Range up to 5 km / 3.1 mi (multi-mode) or up to 30 km / 18.6 mi (single-mode)
- Increased temperature range of -30 to +75 °C / -22 ... +158 °F
- Easy commissioning, no configuration required
- Installation in Zone 2 and Class I, Div. 2 or in the safe area

WebCode 9721A

The Media Converter is used to convert electrical Ethernet signals (TX) into optical Ethernet signals (FX).
The optical Ethernet signals are used for operation in hazardous areas of Zone 0, 1, 2 and Class I, II, III Div. 1, 2 with the type of protection “op is”. Therefore, conventional fiber optic cables can also be used in hazardous areas and may be connected and disconnected during operation (hot swap).
The Media Converter (multi-mode) is suitable for operation of Remote I/O systems IS1+ in Zone 1 and Class I, Div. 1

	IECEx / ATEX					
Zone	0	1	2	20	21	22
Ex interface	•	•	•	•	•	•
Installation in			•			

	NEC 500 CEC Appendix J					
	Class I		Class II		Class III	
Division	1	2	1	2	1	2
Ex interface	•	•	•	•	•	•
Installation in		•				

	CEC Section 18					
	NEC® 505 Class I			NEC® 506		
Zone	0	1	2	20	21	22
Ex interface	•	•	•	•	•	•
Installation in			•			

Selection Table

Product variant		Media converter FX op is / TX SC for Zone 2						
FO fibre type	FO transmission distance	Interface 1	Interface 2	Product Type	Art. No.	Listprice €	PS	Weight kg
Multi mode	5 km 4 km	1 Port, 100BASE-FX MM SC	1 Port, 100BASE-TX, RJ45	9721/13-11-14	220381▲	322.00	75	0.240

Single mode version is not suitable for direct connection to Remote I/O IS1+.

Technical Data

Explosion Protection	
IECEx gas explosion protection	Ex nA [op is T6 Ga] IIC T4 Gc
IECEx dust explosion protection	[Ex op is Da] IIIC
ATEX gas explosion protection	⟨Ex⟩ II 3 (1) G Ex nA [op is T6 Ga] IIC T4 Gc
ATEX dust explosion protection	⟨Ex⟩ II (1) D [Ex op is Da] IIIC
EAC gas explosion protection	2 Ex nA [op is T6 Ga] Iic T4 Gc X
EAC dust explosion protection	[Ex op is Da] IIIC X
Certificates	ATEX (TUR), Canada (FM), China (NEPSI), EAC (STV), IECEx (TUR), India (PESO), USA (FM)
Notes	CCC certificate available from 2021 onward
Ship approval	EU RO MR
Electrical Data	
Connection Ethernet Interface	RJ 45 plug connector

▲ Preferred products – in stock or available at short notice
09-Nov-2020· KP·en

A5

Technical Data

Electrical Data	
FO wavelength	1310 nm
FO attenuation	1 dB / km
FO bandwidth	800 MHz * km 500 MHz * km
FO connection type	SC plug connector
Transfer rate	10/100 Mbit/s Auto-negotiation
FO fibre cross-section	50/125 µm [OM2]
FO optical budget	12 dB
Operating mode	Half duplex, Full duplex Auto-MDI(X)
Auxiliary Power	
Power consumption max.	2.5 W
Nominal voltage	24 V DC
Polarity reversal protection	Yes
Current consumption max.	200 mA
Ambient Conditions	
Ambient temperature	-30 °C ... +75 °C
Mechanical Data	
Degree of protection (IP)	IP20
Enclosure material	Stainless steel, powder-coated

Accessories

Figure	Description	Art. No.	Listprice €	PS	Weight kg
FO patch cable					
	Patch cable for connection of IS1+ Ethernet CPU 9441 and 9442 with media converter 9721; plug LC / SC; length 3 m	220911 ▲	82.00	Z2	–

Dimensional Drawings (All Dimensions in mm [inches]) – Subject to Alterations

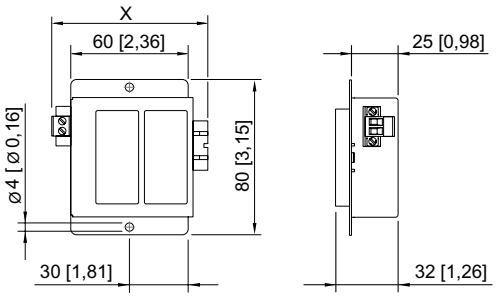

	Dimension X
with fibre optic sockets and an auxiliary power connection	81 mm [3.19]
as described above with an installed fibre optic plug	116 mm [4.57]



- For operation of up to four inherently safe optical fiber cables “op is” according to IEC 60079-28
- For 100 Mbit/s Industrial Ethernet with “op is” fiber optic in Zone 0, 1 or 2 and Class I, II, III Div.1 or 2
- Transmission range up to 5 km / 3.1 mi (multi-mode) or up to 30 km / 18.6 mi (single-mode)
- Extended temperature range -30 ...+70 °C / -22 ... +158 °F
- Redundant supply
- Installation in Zone 2 and Class I, Div. 2 or in the safe area

WebCode 9721B

The 9721 unmanaged switch is designed for linking electrical Ethernet networks (TX) and fiber optic (FX) based networks. The fiber optics are used for operation in hazardous areas of Zone 0, 1, 2 and Class I, II, III Div. 1 with the type of protection “Ex op is” (IEC/EN 60079-28). Therefore, conventional fiber optic cables can also be used in hazardous areas and may be connected and disconnected during operation (hot swap). The unmanaged switch has 2 TX ports and 4 FX op is ports. Redundant supply can be provided. Compatible with: Remote I/O IS1+, HMI Series ET/MT-xx6-A-FX and ET/MT-4x8, as well as for IP network cameras.

	IECEx / ATEX					
Zone	0	1	2	20	21	22
Ex interface	•	•	•	•	•	•
Installation in			•			

	NEC 500 CEC Appendix J					
	Class I		Class II		Class III	
Division	1	2	1	2	1	2
Ex interface	•	•	•	•	•	•
Installation in		•				

	CEC Section 18					
	NEC® 505			NEC® 506		
	Class I					
Zone	0	1	2	20	21	22
Ex interface	•	•	•	•	•	•
Installation in			•			

Selection Table

Product variant		Unmanaged Switch FX op is / TX SC						
FO fibre type	FO transmission distance	Interface 1	Interface 2	Product Type	Art. No.	Listprice €	PS	Weight kg
Multi mode	5 km 4 km	4 Port, 100BASE-FX MM SC	2 Port, 100BASE-TX, RJ45	9721/13-42-14	243427▲	1494.00	75	0.500

Single mode version is not suitable for direct connection to Remote I/O IS1+.

Technical Data

Explosion Protection	
IECEx gas explosion protection	Ex nA [op is T6 Ga] IIC T4 Gc
IECEx dust explosion protection	[Ex op is Da] IIIC
ATEX gas explosion protection	II 3 (1) G Ex nA [op is T6 Ga] IIC T4 Gc
ATEX dust explosion protection	II (1) D [Ex op is Da] IIIC
EAC gas explosion protection	2 Ex e [op is T6 Ga] IIC T4 Gc X
EAC dust explosion protection	[Ex op is Da] IIIC X
Certificates	ATEX (TUR), Canada (FM), China (NEPSI), EAC (Sertium), IECEx (TUR), India (PESO), USA (FM)
Notes	CCC certificate available from 2021 onward
Electrical Data	
Connection Ethernet Interface	RJ 45 plug connector

▲ Preferred products – in stock or available at short notice

A5

Technical Data

Electrical Data	
FO wavelength	1310 nm
FO attenuation	1 dB / km
FO bandwidth	800 MHz * km 500 MHz * km
FO connection type	SC plug connector
FO fibre cross-section	50/125 µm [OM2]
Transfer rate	10/100 Mbit/s Auto-negotiation
FO optical budget	12 dB
Operating mode	Half duplex, Full duplex Auto-MDI(X)
Auxiliary Power	
Max. power consumption	6.4 W
Nominal voltage	24 V DC
Polarity reversal protection	Yes
Current consumption max.	500 mA
Ambient Conditions	
Ambient temperature	-30 °C ... +70 °C
Mechanical Data	
Degree of protection (IP)	IP20
Enclosure material	Stainless steel, powder-coated
Mounting / Installation	
Mounting type	On 35 mm DIN rail

Accessories

Figure	Description	Art. No.	Listprice €	PS	Weight kg
FO patch cable					
	Patch cable for connection of IS1+ Ethernet CPU 9441 and 9442 with media converter 9721; plug LC / SC; length 3 m	220911▲	82.00	Z2	–

Dimensional Drawings (All Dimensions in mm [inches]) – Subject to Alterations

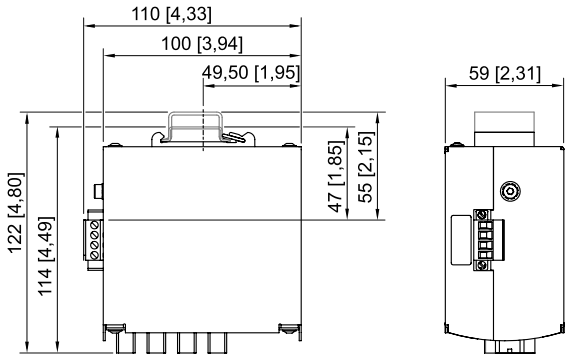



- Simple, front-end parameterization
- Bit refresh function improves signal quality
- Adjustable transmission speeds of 1.2 kbit/s and 1.5 Mbit/s - automatic with PROFIBUS DP
- Intrinsically Safe field interface for RS-485

WebCode 9185A

9185/11 series fieldbus isolating repeaters are the interface between intrinsically safe and non-intrinsically safe PROFIBUS DP segments, Modbus RTU segments and other similar fieldbus segments. These devices galvanically separate intrinsically safe bus interfaces (RS-422/RS-485) from non-intrinsically safe interfaces (RS-232, RS-422 or RS-485).

	IECEx / ATEX					
Zone	0	1	2	20	21	22
Ex interface		•	•		•	•
Installation in			•			

	NEC 500 CEC Appendix J					
	Class I		Class II		Class III	
Division	1	2	1	2	1	2
Ex interface	•	•	•	•	•	•
Installation in		•				

	CEC Section 18 NEC® 505			NEC® 506		
	Class I					
Zone	0	1	2	20	21	22
Ex interface		•	•			
Installation in			•			

Selection Table

Product Description	Fieldbus isolating repeater ISpac					
Field side of interfaces	Safe interface area	Product Type	Art. No.	Listprice €	PS	Weight kg
RS-485 IS (PNO)	RS 232, RS 422, RS 485	9185/11-35-10s	227598 ▲	1108.20	21	0.350

Technical Data

Explosion Protection	
IECEx gas explosion protection	Ex nA [ib Gb] IIC T4 Gc
IECEx dust explosion protection	[Ex ib Db] IIIC
ATEX gas explosion protection	II 3 (2) G Ex nA [ib Gb] IIC T4 Gc
ATEX dust explosion protection	II (2) D [Ex ib Db] IIIC
EAC gas explosion protection	2 Ex nA [ib Gb] IIC T4 Gc X
EAC dust explosion protection	[Ex ib Db] IIIC
Certificates	ATEX (BVS), Canada (FM), EAC (ENDCE), IECEx (BVS), India (PESO), USA (FM)
Notes	CCC certificate available from 2021 onward
Ship approval	CCS, EU RO MR
Electrical Data	
Connections	Sub-D socket X3, 9-pole (Interface field area)
Interface settings	Fixed transmission speed or automatic detection > 9.6 kbit/s (only with Profibus DP)
Electrical interface data rate	1.2 kbit/s - 1.5 Mbit/s
Auxiliary Power	
Auxiliary power	24 V AC / DC

Fieldbus Isolating Repeater

Series 9185/11 with an Intrinsically Safe Interface

Accessories

Figure	Description	Art. No.	Listprice €	PS	Weight kg
SUB-D socket					
	9-pin for connection of the fieldbus or ServiceBus to the CPU & power module Series 9440/22 and fieldbus-isolating repeater 9185. Integrated terminator can be switched on or off. For RS 485 IS to PNO standard.	162693▲	61.70	Z2	0.100

Dimensional Drawings (All Dimensions in mm [inches]) – Subject to Alterations

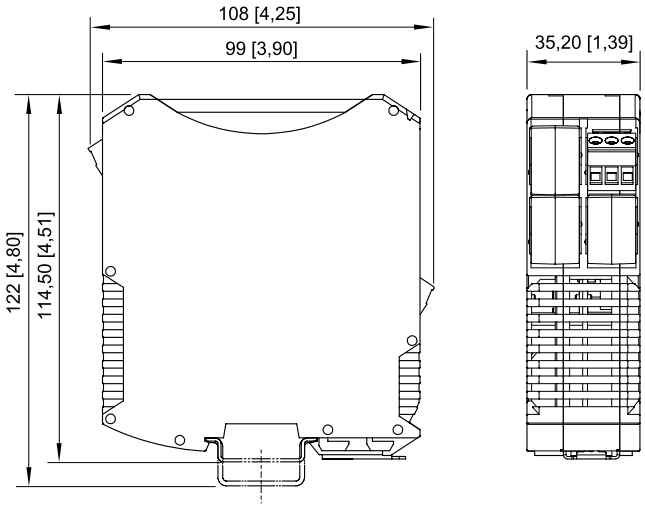

ISpac Series 9143, 9185, 9192 with screw terminal



- Simple, front-end parameterization
- Bit refresh function improves signal quality
- Adjustable transmission speeds of 1.2 kbit/s and 1.5 Mbit/s - automatic with PROFIBUS DP
- Field interface non-Ex i

WebCode 9185B

The 9185/12 series fieldbus isolating repeater can be used for the galvanically separated transmission of communication signals. It prevents any compensating currents and protects easily damaged terminal equipment from transient coupling, thereby ensuring undisturbed signal transmission for R. STAHL PROFIBUS DP, Modbus RTU and service bus. The RS-232 interface allows a PC to be connected.

	IECEx / ATEX					
Zone	0	1	2	20	21	22
Ex interface		•	•		•	•
Installation in			•			

	NEC 500 CEC Appendix J					
	Class I		Class II		Class III	
Division	1	2	1	2	1	2
Ex interface	•	•	•	•	•	•
Installation in		•				

	CEC Section 18 NEC® 505 Class I			NEC® 506		
Zone	0	1	2	20	21	22
Ex interface		•	•			
Installation in			•			

Selection Table

Product Description	Fieldbus isolating repeater ISpac					
Field side of interfaces	Safe interface area	Product Type	Art. No.	Listprice €	PS	Weight kg
RS 485 / RS 422 (switchable)	RS 232, RS 422, RS 485	9185/12-45-10s	227600 ▲	695.30	21	0.350

Technical Data

Explosion Protection	
IECEx gas explosion protection	Ex nA IIC T4 Gc
ATEX gas explosion protection	Ex II 3 G Ex nA IIC T4 Gc
EAC gas explosion protection	Ex 2 Ex nA IIC T4 Gc X
Certificates	ATEX (BVS), Canada (FM), EAC (ENDCE), IECEx (BVS), India (PESO), USA (FM)
Notes	CCC certificate available from 2021 onward
Ship approval	CCS, EU RO MR
Electrical Data	
Interface field area level	EIA RS 485, EIA RS 422
Connections	Sub-D socket X3, 9-pole (Interface field area)
Interface settings	Fixed transmission speed or automatic detection > 9.6 kbit/s (only with Profibus DP)
Line length interface field area	Depends on transmission rate and cable
Data transmission indication	LED green "RxD2"
Electrical interface data rate	1.2 kbit/s - 1.5 Mbit/s
Terminating resistor interface field area	to be set in external plug

Fieldbus Isolating Repeater
Series 9185/12

Technical Data

Auxiliary Power	
Auxiliary power	24 V AC / DC
Nominal current	66 mA

Accessories

Figure	Description	Art. No.	Listprice €	PS	Weight kg
Sub-D plug + PG interface					
	9-pin for connection of the fieldbus or ServiceBus to the CPU & power module Series 9440/15 and fieldbus-isolating repeater 9185. Integrated terminator can be switched on or off. For non-intrinsically safe RS-485.	105715 ▲	48.90	Z2	0.001

Dimensional Drawings (All Dimensions in mm [inches]) – Subject to Alterations

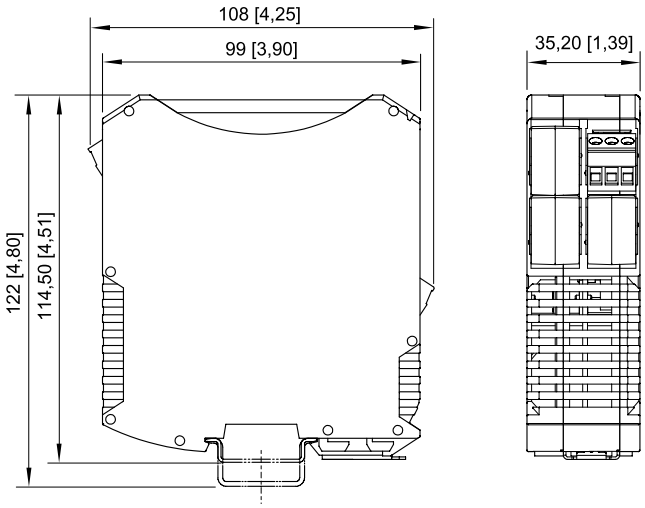

ISpac Series 9143, 9185, 9192 with screw terminal

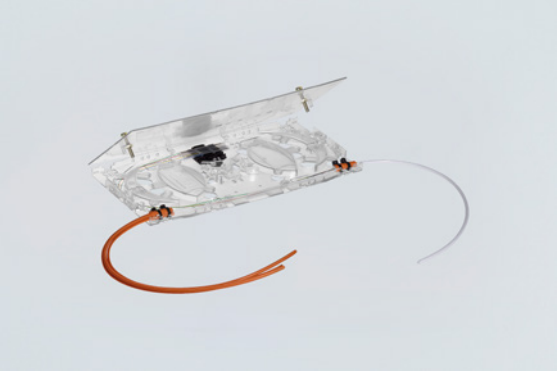

- For installation in a protective enclosure in accordance with DIN EN 60079-0
- Standard and customised enclosure versions available
- For professional and time-saving FO installation in Zone 1 and 2
- With one or two splice protector holders for installation of 6 or 12 fibre optics
- Integrated crossover field for a bending radius-limited crossover of fibres
- FO can provide power supply to all four sides
- Easy mounting

WebCode 8186A

The 8186 series FO splice cassette for Zone 1 enables the proper and time effective connection of fibre optic cables in hazardous areas. Overall, the splice cassette provides space for 2 splice protection holders. When using one splice protection holder a max. of 6 fibre optics can be installed or max. 12 fibre optics with two splice protection holders. The splice cassette is used, for example, in connection chamber enclosures as a transfer point between the flameproof control panels and network or as a connection point between the fibre optics. The splice cassette is available for use in areas prone to gas or dust explosions, for installation in a protective enclosure in accordance with DIN EN 60079-0, and which is suitable for the provided operating location. Pre-assembled and customised enclosure solutions for various applications are available.

	IECEx / ATEX					
Zone	0	1	2	20	21	22
Installation in		•	•			

Selection Table

Product Description	Splice cassette Fibre optic				
Product Type	Description	Art. No.	Listprice €	PS	Weight kg
8186/1	max. 12 fibre optics	203633▲	28.60	75	0.105

The splice Cassette is available installed in Ex e enclosure, see accessories. Enclosure versions on request.

Technical Data

Explosion Protection	
IECEx gas explosion protection	Ex op pr IIC Gb
ATEX gas explosion protection	⟨Ex⟩ II 2 G Ex op pr IIC Gb
Certificates	ATEX (PTB), IECEx (PTB)
Electrical Data	
Frequency	10 GHz 1 GHz 100 MHz 10 MHz
Ambient Conditions	
Ambient temperature	-55 °C ... +75 °C

▲ Preferred products – in stock or available at short notice

Optical Fibre Splice Cassette

Series 8186 for Use in Zone 1

Accessories

Figure	Description	Art. No.	Listprice €	PS	Weight kg
Control panel With fibre optic Splice cassette					
	Enclosure 8146/5071+ 8186 (1 x Splice cassette) Polyester resin, Glass fibre reinforced	257034	165.00	10	1.700
	Enclosure 8150/5-0360-0176-091-3311+ 8186 (1 x Splice cassette) 1.4404 stainless steel, (AISI 316L), brush finished	241704	471.00	10	3.800

Dimensional Drawings (All Dimensions in mm [inches]) – Subject to Alterations

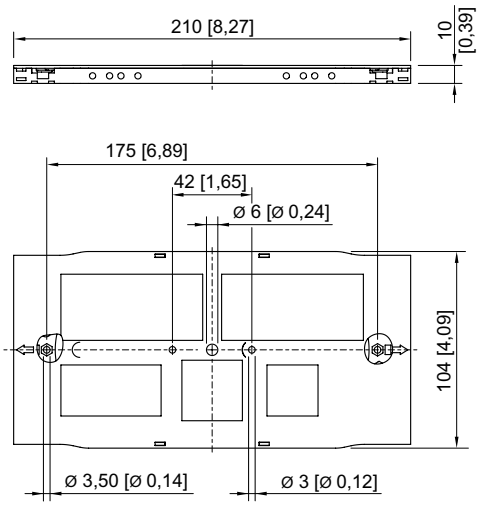



- For use in Zone 1 and Zone 2
- In type of protection Ex e
- Easy connection thanks to spring clamp terminals
- Data rate up to 1000 Mbit/s

WebCode 8187A

This terminal is designed for connection of Ethernet cables in hazardous areas. The connection technology commonly used for data transmission such as RJ45 plug connector can be used directly only in the safe area, while the Ethernet terminal with type of protection Ex e allows for the economical use in Ex enclosures and simple mounting.

	IECEx / ATEX					
Zone	0	1	2	20	21	22
Installation in		•	•			

Selection Table

Product Description	Networking technology Ethernet terminal For Zone 1				
Product Type	Art. No.	Listprice €	PS	Weight kg	
8187/10-0	277549▲	110.00	75	0.175	

Technical Data

Explosion Protection	
IECEx gas explosion protection	Ex eb IIC Gb
ATEX gas explosion protection	II 2 G Ex eb IIC Gb
Certificates	ATEX (IBE), IECEx (IBE)
Notes	CCC certificate available from 2021 onward
Electrical Data	
Transfer rate	10/100/1000 BaseT
Rated operational voltage DC	60 V
Rated operational current	0.5 A
Ambient Conditions	
Ambient temperature	-40°C ... +75°C
Mechanical Data	
Degree of protection IP (IEC 60529)	IP20
Mounting / Installation	
Mounting type	on DIN rail NS 35 (DIN EN 60715)

▲ Preferred products – in stock or available at short notice

Accessories

Figure	Description	Art. No.	Listprice €	PS	Weight kg
Ex e enclosure with Ethernet terminal					
	8146/5041+ 8187 (1 x Ethernet terminal) Polyester resin, Glass fibre reinforced	257033	175.00	10	–
	8150/5-0176-0116-091-3311+ 8187 (1 x Ethernet terminal) 1.4404 stainless steel, (AISI 316L), brush finished	241703	327.60	10	2.500

A5

Dimensional Drawings (All Dimensions in mm [inches]) – Subject to Alterations

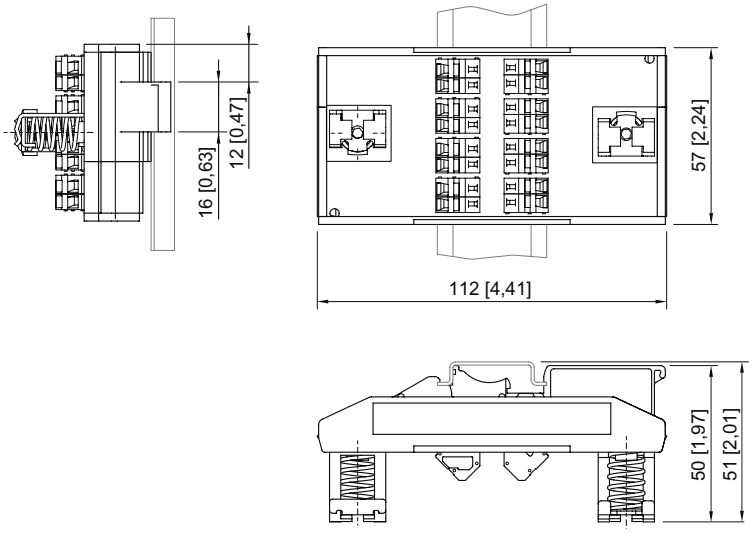



EX P SOLUTIONS



Product	Installation in Zone						Series	Page	WebCode
	0	1	2	20	21	22			
Ex p Control Panels									
Ex p System NEW		•	•		•	•	8621 & 7621	162	8621A
Ex p Solutions									
Ex p Solutions Pressurisation for Hazardous Areas		•	•		•	•		160	

For additional products and information please refer to r-stahl.com





Pharmaceutical industry – Filling and dosing systems
Fully automated Ex p system for dosing system or label printer control panels. Inspection windows or doors with a single-hand-ed locking mechanism for directly removing labels allow for continuous, uninterrupted operation.
Machine-building – Ex p control panel for drive systems
Allows for easy use of frequency converters and other industrial components in hazardous areas. Comes complete with climate control.
Chemical industry – Displaying and operating Standard industrial components such as computers and programmable logic controllers (PLCs) featuring a screen are furnished with explosion protection in the form of a pressurised enclosure, and can still be operated as normal from outside.



Suitable for use anywhere in the world

We devise explosion-protected control panel solutions for your industrial applications that retain your systems' full functionality. The proven, cost-effective solution for all machine control panels and other electrical units.

Internationally recognised certificates such as ATEX, IEC and NEC allow you to use your equipment anywhere in the world.



Reduced retrofitting requirements

Whether you want to cool high-performance control panels or easily operate industrial products, we can achieve this without extensive, complex retrofitting work.



ATEX and IECEx solutions

Simple and safe to install and use.
A variety of standard components is available for both small and large cabinets.
Available with supply voltages of from 24 V DC to 230 V AC.



NEC solutions

Different system components are installed (Class I Div. 2 or Class I Div. 1), depending on the intended use and range of applications.
Solutions for dust hazardous areas are also possible and can take the form of manual or automatic systems.



Ex stock standard enclosures for Ex p solutions

Our extensive range of ex stock enclosures made from sheet steel, stainless steel and plastic allows for short delivery times and flexible solutions offering capacities of between 1 litre and 20 cubic metres.
Our modular system makes it easy to modify, expand and upgrade your enclosures.



- All-round Ex p system for Ex p cabinets from 10 litres to 4000 litres
- Zones 1, 2, 21 & 22
- Mounting on the roof or lateral enclosure wall
- Ex p controller in DC 24 V or AC 90-253 V
- Compact structure, simple mounting
- Language-independent and display-supported adjustment of Ex p parameters

A6

WebCode **8621A**

The Ex p system 8621 is optimally suitable for safe control and monitoring of Ex p control cabinets in a range of sizes. The highly accurate pressure sensors, which are redundantly present for the Ex Zone 1 version, enable operation near the pressure switch-off threshold. This reduces the required leak amounts to a minimum and guarantees very cost-effective continuous operation.
The concept with a modular system component structure enables purge times and purge pressures to be adapted to meet current requirements. To do so, only the number of purge gas outlets (Ex p pressure monitors) needs to be changed in order to drastically reduce the purge time or purge pressure, if the same Ex p controller is used.
To guarantee withstanding adverse environmental conditions, our tried-and-tested glass fibre reinforced polyester has been selected as the enclosure material. Additionally, optional suitable protective collars are available as protection against heavy rainfall.
A device as simple as it is effective (Ex p vortex air cooler) is available for cooling Ex p cabinets. In this respect, too, the cooling power is regulated solely by the number of structurally identical devices that are installed.

	IECEx / ATEX					
Zone	0	1	2	20	21	22
Installation in		•	•		•	•

Selection Table

Product variant Ex p pressure reducer Connection thread Purging air nozzle			for Zone 1 and 21; Ex p complete System for Ex p cabinets more than 1200 l 1 x Design size 4 1/2 " 4.8 mm								
Auxiliary power rated operating voltage	Ex p Controller release contact	Pressure regulation	Ex p Controller	Ex p purging valve	Ex p pressure monitor	Back-up fuse	Product Type	Art. No.	Listprice €	PS	Weight kg
AC 230 V (±10%) / 50-60 Hz	2-pole line voltage	digital regulation	1 x Type 8622/ 11-1000-0000	1 x Type 8622/ 21-0001-0000	2 x Type 8622/ 31-1001-0000	1 x Type 8622/ 63-0001	8621/11-1000-0100	269574	2827.60	76	4.200
		automatically regulation	1 x Type 8622/ 11-1000-0000	1 x Type 8622/ 21-1001-0000	2 x Type 8622/ 31-1001-0000	1 x Type 8622/ 63-0002	8621/11-1000-0110	269575	3028.50	76	4.600
DC 24 V (+20%-15%)	1 potential-free contact	digital regulation	1 x Type 8622/ 11-1020-1000	1 x Type 8622/ 21-0021-0000	2 x Type 8622/ 31-1001-0000	1 x Type 8622/ 63-0005	8621/11-1020-1100	276264	2827.60	76	4.200
		automatically regulation	1 x Type 8622/ 11-1020-1000	1 x Type 8622/ 21-1021-0000	2 x Type 8622/ 31-1001-0000	1 x Type 8622/ 63-0005	8621/11-1020-1110	276265	3028.50	76	4.600

Selection Table

Product variant Ex p pressure reducer Connection thread Purging air nozzle			for Zone 1 and 21; Ex p complete System for Ex p cabinets to 1200 l 1 x Design size 2 1/4 " 3 mm								
Auxiliary power rated operating voltage	Ex p Controller release contact	Pressure regulation	Ex p Controller	Ex p purging valve	Ex p pressure monitor	Back-up fuse	Product Type	Art. No.	Listprice €	PS	Weight kg
AC 230 V (±10%) / 50-60 Hz	2-pole line voltage	digital regulation	1 x Type 8622/ 11-1000-0000	1 x Type 8622/ 21-0000-0000	1 x Type 8622/ 31-1001-0000	1 x Type 8622/ 63-0001	8621/11-1000-0000	269572	2614.50	76	3.500
		automatically regulation	1 x Type 8622/ 11-1000-0000	1 x Type 8622/ 21-1000-0000	1 x Type 8622/ 31-1001-0000	1 x Type 8622/ 63-0001	8621/11-1000-0010	269573	2797.90	76	3.400
DC 24 V (+20%-15%)	1 potential-free contact	digital regulation	1 x Type 8622/ 11-1020-1000	1 x Type 8622/ 21-0020-0000	1 x Type 8622/ 31-1001-0000	1 x Type 8622/ 63-0005	8621/11-1020-1000	276262	2614.50	76	3.500
		automatically regulation	1 x Type 8622/ 11-1020-1000	1 x Type 8622/ 21-1020-0000	1 x Type 8622/ 31-1001-0000	1 x Type 8622/ 63-0004	8621/11-1020-1010	276263	2797.90	76	3.400
Product variant Ex p pressure reducer Connection thread Purging air nozzle			for Zone 2 and 22; Ex p complete System for Ex p cabinets more than 1200 l 1 x Design size 4 1/2 " 4.8 mm								
Auxiliary power rated operating voltage	Ex p Controller release contact	Pressure regulation	Ex p Controller	Ex p purging valve	Ex p pressure monitor	Back-up fuse	Product Type	Art. No.	Listprice €	PS	Weight kg
AC 230 V (±10%) / 50-60 Hz	2-pole line voltage	digital regulation	1 x Type 7622/ 11-1000-0000	1 x Type 8622/ 21-0001-0000	2 x Type 8622/ 31-1001-0000	1 x Type 8622/ 63-0001	7621/11-1000-0100	276268	1907.00	76	4.200
		automatically regulation	1 x Type 7622/ 11-1000-0000	1 x Type 8622/ 21-1001-0000	2 x Type 8622/ 31-1001-0000	1 x Type 8622/ 63-0002	7621/11-1000-0110	276269	2052.30	76	4.600
DC 24 V (+20%-15%)	1 potential-free contact	digital regulation	1 x Type 7622/ 11-1020-1000	1 x Type 8622/ 21-0021-0000	2 x Type 8622/ 31-1001-0000	1 x Type 8622/ 63-0005	7621/11-1020-1100	276332	1851.40	76	4.200
		automatically regulation	1 x Type 7622/ 11-1020-1000	1 x Type 8622/ 21-1021-0000	2 x Type 8622/ 31-1001-0000	1 x Type 8622/ 63-0005	7621/11-1020-1110	276333	2052.30	76	4.600
Product variant Ex p pressure reducer Connection thread Purging air nozzle			for Zone 2 and 22; Ex p complete System for Ex p cabinets to 1200 l 1 x Design size 2 1/4 " 3 mm								
Auxiliary power rated operating voltage	Ex p Controller release contact	Pressure regulation	Ex p Controller	Ex p purging valve	Ex p pressure monitor	Back-up fuse	Product Type	Art. No.	Listprice €	PS	Weight kg
AC 230 V (±10%) / 50-60 Hz	2-pole line voltage	digital regulation	1 x Type 7622/ 11-1000-0000	1 x Type 8622/ 21-0000-0000	1 x Type 8622/ 31-1001-0000	1 x Type 8622/ 63-0001	7621/11-1000-0000	276266	1639.00	76	3.500
		automatically regulation	1 x Type 7622/ 11-1000-0000	1 x Type 8622/ 21-1000-0000	1 x Type 8622/ 31-1001-0000	1 x Type 8622/ 63-0001	7621/11-1000-0010	276267	1821.70	76	3.400
DC 24 V (+20%-15%)	1 potential-free contact	digital regulation	1 x Type 7622/ 11-1020-1000	1 x Type 8622/ 21-0020-0000	1 x Type 8622/ 31-1001-0000	1 x Type 8622/ 63-0005	7621/11-1020-1000	276270	1639.00	76	3.500
		automatically regulation	1 x Type 7622/ 11-1020-1000	1 x Type 8622/ 21-1020-0000	1 x Type 8622/ 31-1001-0000	1 x Type 8622/ 63-0004	7621/11-1020-1010	276331	1821.70	76	3.400

Technical Data

Variant	Type 8621 for Zone 1 and 21	Type 7621 for Zone 2 and 22
Explosion Protection		
IECEx gas explosion protection	Ex eb mb ia [pxb Gb] [ia Ga] IIC T4 Gb	Ex ec mc ia [pzc Gc] [ia Ga] IIC T4 Gc
IECEx dust explosion protection	Ex tb [pxb Db] [ia Da] IIIC T130 °C Db	Ex tc [pzc Dc] [ia Da] IIIC T80 °C Dc
ATEX gas explosion protection	⟨Ex⟩ II 2 (1) G Ex eb mb ia [pxb Gb] [ia Ga] IIC T4 Gb	⟨Ex⟩ II 3 (1) G Ex ec mc ia [pzc Gc] [ia Ga] IIC T4 Gc
ATEX dust explosion protection	⟨Ex⟩ II 2 (1) D Ex tb [pxb Db] [ia Da] IIIC T130 °C Db	⟨Ex⟩ II 3 (1) D Ex tc [pzc Dc] [ia Da] IIIC T80 °C Dc
Further information	See operating instructions of Ex p system	See operating instructions of Ex p system
Auxiliary Power		
Auxiliary power connection	screw connector	screw connector
Note	Rated current is independent of the Ex p purge valve used	Rated current is independent of the Ex p purge valve used

A6

Technical Data

Variant	Type 8621 for Zone 1 and 21	Type 7621 for Zone 2 and 22
Device Specific Data		
Pressure range	0 – 25 mbar	0 – 25 mbar
Max. power dissipation	1.5 W plus Ex p purge valve	1.5 W plus Ex p purge valve
Ex p pressure monitor opening pressure	3.5 mbar	3.5 mbar
Die-cast zinc	Die-cast zinc	Die-cast zinc
Ex p purging valve material	brass	brass
Ex p hose set	1 x Type 8622/65-0000	1 x Type 8622/65-0000
Ex p hose set hose length	3 m	3 m
Purge time range	0 – 99 min	0 – 99 min
MIN setting	1 mbar	1 mbar
MAX setting	15 mbar	15 mbar
DIFF setting	2 mbar	2 mbar
Ambient Conditions		
Ambient temperature	-30 °C ... +60 °C	-30 °C ... +60 °C
Storage temperature	-30 °C ... +60 °C	-30 °C ... +60 °C
Mechanical Data		
Degree of protection IP (IEC 60529)	IP65 IP66 optional	IP65 IP66 optional
Enclosure material	Polyester, glass fibre reinforced	Polyester, glass fibre reinforced
Sealing material	Silicone, foamed	Silicone, foamed
Cable gland	1 x M20 x 1.5 3 x M16 x 1.5	1 x M20 x 1.5 3 x M16 x 1.5
Material cable gland	Polyamide, black	Polyamide, black
Mounting / Installation		
Mounting position	Horizontal Vertical	Horizontal Vertical
Note	Suitable for attachment to Ex pxb, Ex pzc, Ex eb, Ex ec, Ex tb and Ex tc cabinets	Suitable for attachment to Ex pzc, Ex ec and Ex tc cabinets

Dimensional Drawings (All Dimensions in mm [inches]) – Subject to Alterations

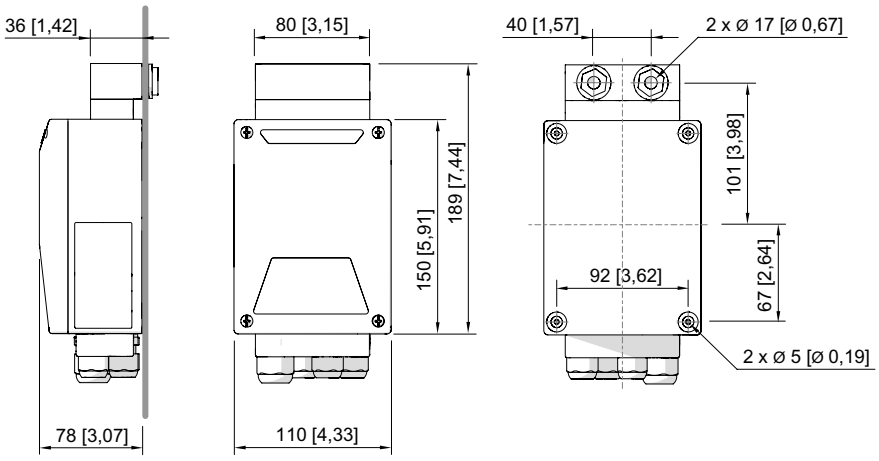

Ex p controller Type 8622/11

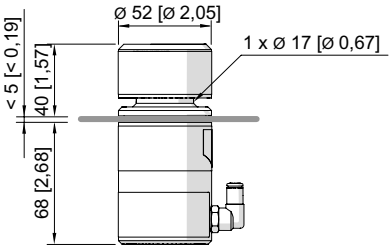

Ex p pressure monitor Type 8622/31

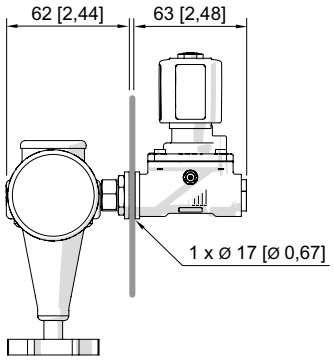

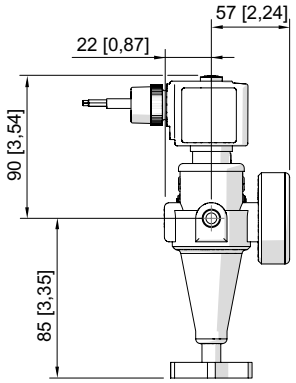

Ex p purge valve with pressure regulator R 1/4″ Type 8622/21

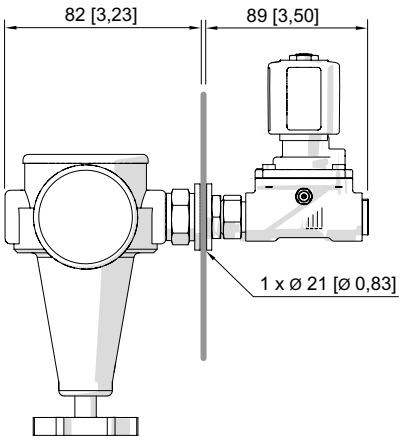

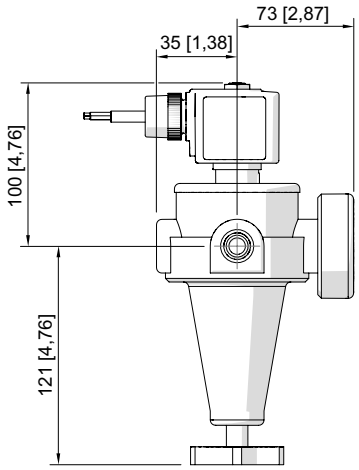

Ex p purge valve with pressure regulator R 1/2″ Type 8622/21

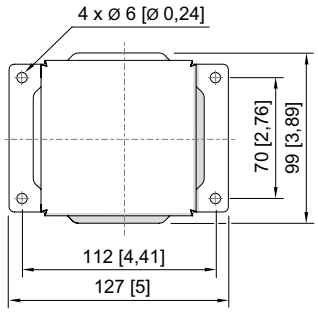

IP66 pressure monitor cover Type 8622/64

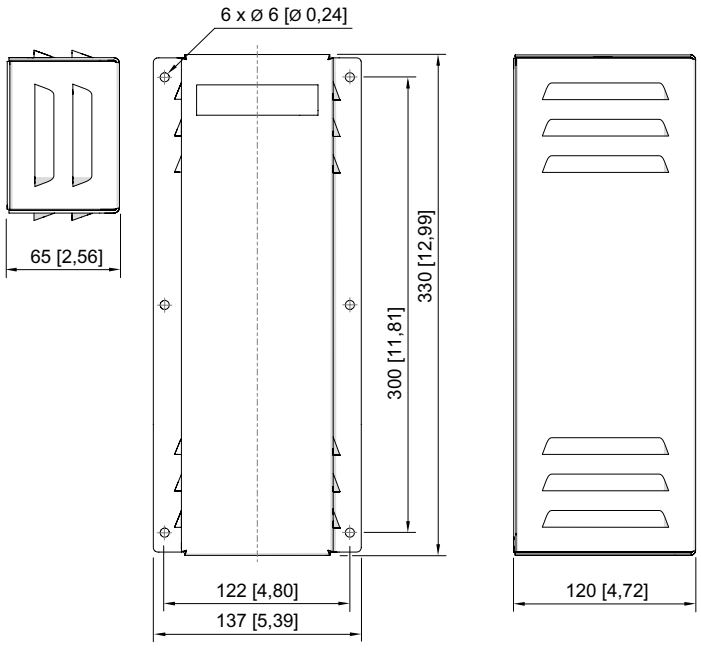

IP66 vortex air cooler cover Type 8622/64

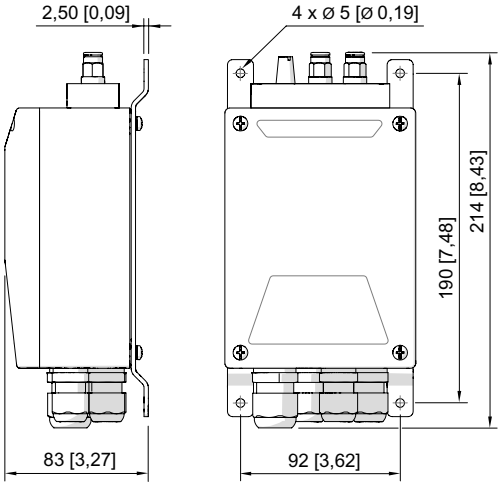

Internal installation set type 8622/68 for Ex p controller



GROUNDING MONITORING DEVICES AND SYSTEMS



Product	Installation in Zone						Series	Page	WebCode
	0	1	2	20	21	22			
General									
Applications								169	
Grounding Monitoring Devices and Systems									
Grounding Monitoring Device made of Aluminium		•	•		•	•	8485	176	8485A
Grounding Monitoring Device made of Polyester Resin		•	•		•	•	8146	170	8146H
Grounding Monitoring Device made of Stainless Steel		•	•		•	•	8150	173	8150G

For additional products and information please refer to r-stahl.com

Applications of Grounding Systems and Grounding Monitoring Devices

Applications

	Product type	Tank wagons	Road tanker	Drums	IBCs	Tank container	Big Bag	Ambient conditions
	8485/111-42	✓	✓				✓	-55 ... +60 °C
	8146/5075 8146/5-V73	✓	✓*	✓	✓	✓		-20 ... +55 °C
	8150/5-V75	✓	✓*	✓	✓	✓		-20 ... +55 °C

* Tanker grounding without object recognition this.

Grounding Monitoring Device
Series 8146 made of Polyester Resin



- Continuous monitoring of correct grounding
- Robust design
- Plastic enclosure (IP66)
- Potential-free change-over contact for signalling to the process control system and external control devices
- Insulated point of suspension
- For use up to SIL 2 (IEC 61508)

WebCode 8146H

A7

The grounding monitoring device ensures that tank containers, drums, road tankers, rail cars and IBCs are correctly electrostatically grounded during the loading of flammable liquids and powder.
The device provides a conductive connection to the ground and monitors in parallel the quality of the electrostatic grounding.
This guarantees that the electrostatic charge remains at a safe level and that no explosion hazard is generated by uncontrolled energy discharge.

	IECEx / ATEX					
Zone	0	1	2	20	21	22
Ex interface		•	•		•	•
Installation in		•	•		•	•

Selection Table

Product Description		Grounding monitoring device						
Nominal voltage range AC	Nominal voltage range DC	Limit contact	SIL	Product Type	Art. No.	Listprice €	PS	Weight kg
96 – 253 V	–	changeover contact	2	8146/5075	136216▲	1838.60	54	5.800

Technical Data

Explosion Protection	
IECEx gas explosion protection	Ex db eb [ia Ga] IIC T4 Gb
IECEx dust explosion protection	Ex tb [ia Da] IIIC T80 °C Db
ATEX gas explosion protection	Ⓔx II 2(1) G Ex db eb [ia Ga] IIC T4 Gb
ATEX dust explosion protection	Ⓔx II 2 (1) D Ex tb [ia Da] IIIC T80 °C Db
Certificates	ATEX (PTB), Brazil (ULB), China (NEPSI), EAC (LPE), IECEx (PTB), SIL (exida)
Safety Data	
Safety-related maximum voltage	253 V
Electrical Data	
Frequency range	48 – 62 Hz
Auxiliary Power	
Nominal current	27 mA
Power consumption	3 W
Output	
Output min. load	12 V / 100 µA

Technical Data	
Output	
Output max. load DC	250 V / 2 A
Output max. load AC	250 V / 4 A
Ambient Conditions	
Ambient temperature	-20 °C ... +55 °C
Storage temperature	-40 °C ... +80 °C
Mechanical Data	
Degree of protection (IP)	IP66
Enclosure material	Glass fibre reinforced polyester resin

Accessories

Figure	Description	Art. No.	Listprice €	PS	Weight kg
Earth clamp with automatic cable winder					
	Automatic winder with 20 m of oil and petrol resistant cable with robust ergonomic grounding clamp of stainless steel, and fast-action plug, aluminium enclosure, protected cable duct with stopper Installation in Zone 1, IIC, T6; Zone 21, IIIC, 135 °C Temperature range: -40 ... +70 °C Certificates: ATEX, IECEx	247671	2466.90	Z2	14.500
	Automatic winder with 9 m of oil and petrol resistant cable with robust ergonomic grounding clamp of stainless steel, and fast-action plug, plastic enclosure Installation in Zone 1, IIC, T6; Zone 21, IIIC, 135 °C Temperature range: -40 ... +70 °C Certificates: ATEX, IECEx	247660	1462.50	Z2	4.500
Grounding clamp with spiral cable					
	5 m oil and petrol resistant spiral cable with robust ergonomic grounding clamp of stainless steel and fast-action plug Installation in Zone 1, IIC, T6; Zone 21, IIIC, 135 °C Temperature range: -40 ... +70 °C Certificates: ATEX, IECEx	247672	607.40	Z2	1.500
	10 m oil and petrol resistant spiral cable with robust ergonomic grounding clamp of stainless steel and fast-action plug Installation in Zone 1, IIC, T6; Zone 21, IIIC, 135 °C Temperature range: -40 ... +70 °C Certificates: ATEX, IECEx	247674	850.00	Z2	4.000

A7

Dimensional Drawings (All Dimensions in mm [inches]) – Subject to Alterations

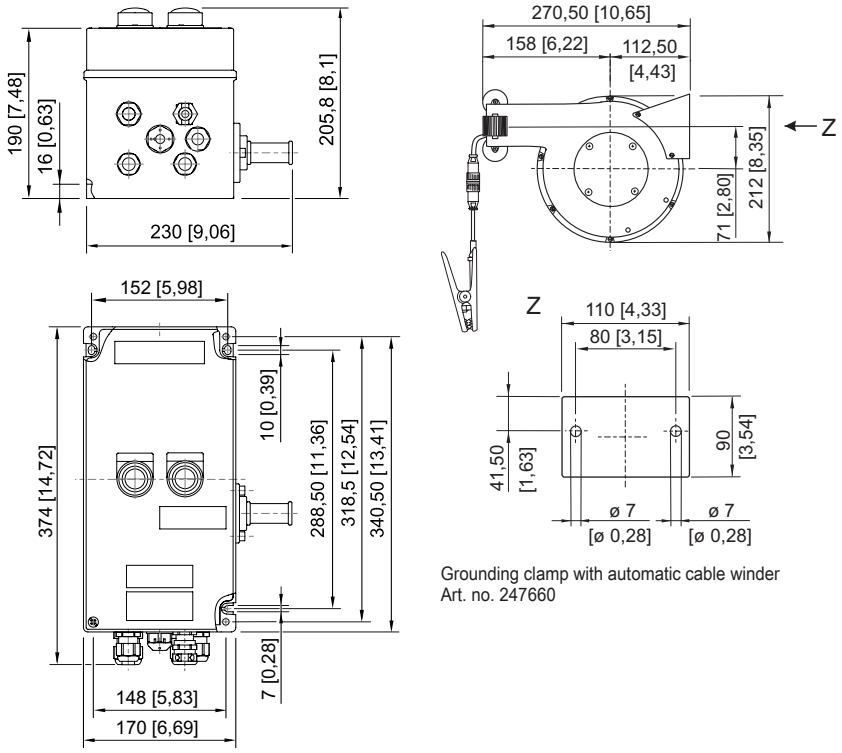

Type 8146/5075, 8146/5-V73

Grounding clamp with automatic cable winder
Art. no. 247660

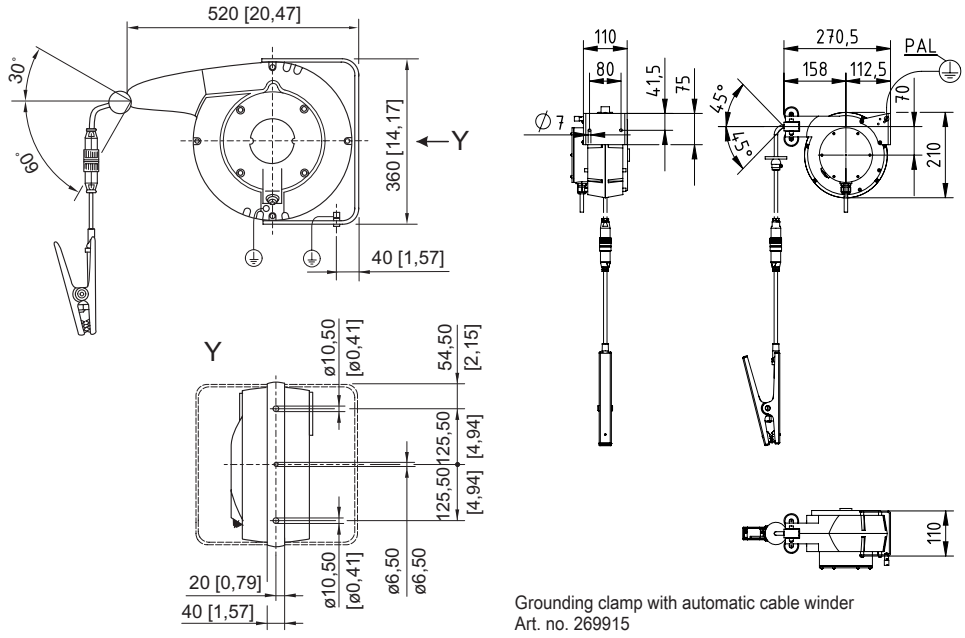

Grounding clamp with automatic cable winder
Art. no. 247671

Grounding clamp with automatic cable winder
Art. no. 269915



- Continuous monitoring of correct grounding
- Robust design
- Weather-protected stainless steal enclosure (IP66)
- Potential-free change-over contact for signalling to the process control system and external control devices
- Insulated point of suspension
- For use up to SIL 2 (IEC 61508)

WebCode 8150G

The grounding monitoring device ensures that tank containers, drums, road tankers, rail cars and IBCs are correctly electrostatically grounded during the loading of flammable liquids.
The device provides a conductive connection to the ground and monitors in parallel the quality of the electrostatic grounding.
This guarantees that the electrostatic charge remains at a safe level and that no explosion hazard is generated by uncontrolled energy discharge.

	IECEx / ATEX					
Zone	0	1	2	20	21	22
Ex interface		•	•		•	•
Installation in		•	•		•	•

Selection Table

Product Description	Grounding monitoring device				
Enclosure material	Product Type	Art. No.	Listprice €	PS	Weight kg
1.4404 stainless steel	8150/5-V75	256498▲	2127.80	54	6.580

Technical Data

Explosion Protection	
IECEx gas explosion protection	Ex db eb [ia Ga] IIC T4 Gb
IECEx dust explosion protection	Ex tb [ia Da] IIIC T80 °C Db
ATEX gas explosion protection	Ⓔx II 2(1) G Ex db eb [ia Ga] IIC T4 Gb
ATEX dust explosion protection	Ⓔx II 2 (1) D Ex tb [ia Da] IIIC T80 °C Db
Certificates	ATEX (PTB), Brazil (ULB), China (NEPSI), EAC (LPE), IECEx (PTB), India (PESO), SIL (exida), Taiwan (ITRI)
Safety Data	
Safety-related maximum voltage	253 V
Functional Safety	
SIL	2
Electrical Data	
Frequency range	48 – 62 Hz
Auxiliary Power	
Nominal voltage range AC	96 – 253 V
Nominal current	27 mA

▲ Preferred products – in stock or available at short notice
09-Nov-2020· KP·en

Grounding Monitoring Device
Series 8150 made of Stainless Steel

Technical Data	
Auxiliary Power	
Power consumption	3 W
Output	
Limit contact	changeover contact
Output min. load	12 V / 100 µA
Output max. load AC	250 V / 4 A
Output max. load DC	250 V / 2 A
Ambient Conditions	
Ambient temperature	-20 °C ... +55 °C
Storage temperature	-40 °C ... +80 °C
Mechanical Data	
Degree of protection (IP)	IP66

Accessories

Figure	Description	Art. No.	Listprice €	PS	Weight kg
Grounding clamp with spiral cable					
	10 m oil and petrol resistant spiral cable with robust ergonomic grounding clamp of stainless steel and fast-action plug Installation in Zone 1, IIC, T6; Zone 21, IIIC, 135 °C Temperature range: -40 ... +70 °C Certificates: ATEX, IECEx	247674	850.00	Z2	4.000
	5 m oil and petrol resistant spiral cable with robust ergonomic grounding clamp of stainless steel and fast-action plug Installation in Zone 1, IIC, T6; Zone 21, IIIC, 135 °C Temperature range: -40 ... +70 °C Certificates: ATEX, IECEx	247672	607.40	Z2	1.500
Earth clamp with automatic cable winder					
	Automatic winder with 20 m of oil and petrol resistant cable with robust ergonomic grounding clamp of stainless steel, and fast-action plug, aluminium enclosure, protected cable duct with stopper Installation in Zone 1, IIC, T6; Zone 21, IIIC, 135 °C Temperature range: -40 ... +70 °C Certificates: ATEX, IECEx	247671	2466.90	Z2	14.500
	Automatic winder with 9 m of oil and petrol resistant cable with robust ergonomic grounding clamp of stainless steel, and fast-action plug, plastic enclosure Installation in Zone 1, IIC, T6; Zone 21, IIIC, 135 °C Temperature range: -40 ... +70 °C Certificates: ATEX, IECEx	247660	1462.50	Z2	4.500

Dimensional Drawings (All Dimensions in mm [inches]) – Subject to Alterations

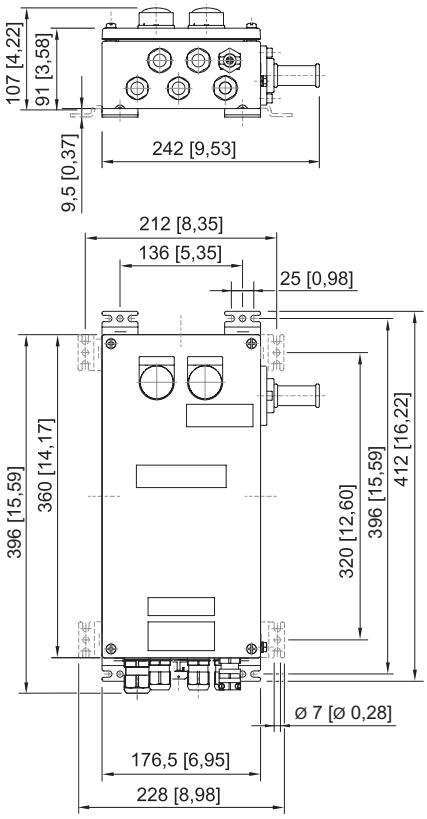

Type 8150/5-V75

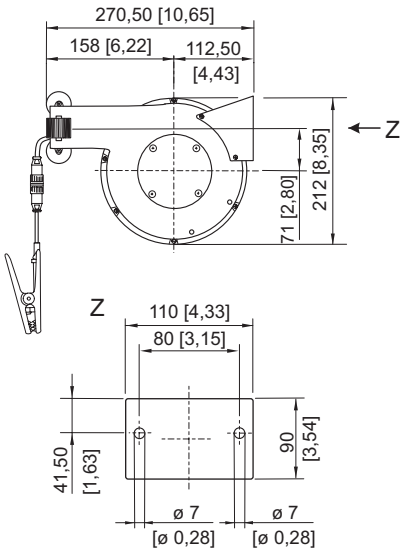

Grounding clamp with automatic cable winder
Art. no. 247660

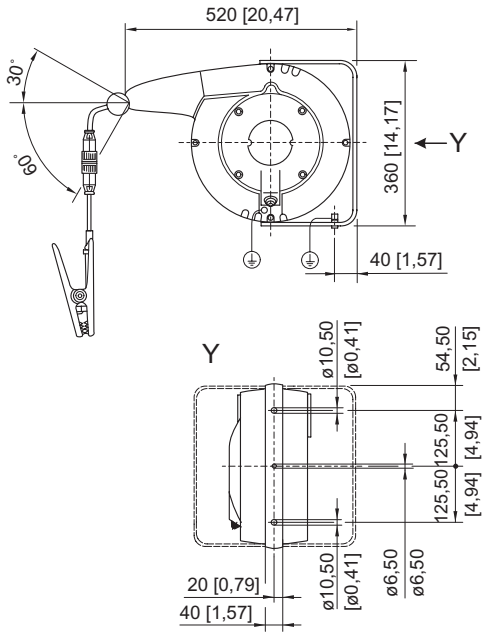

Grounding clamp with automatic cable winder
Art. no. 247671

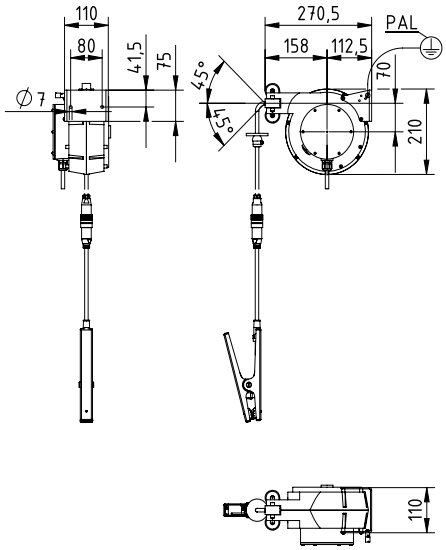

Grounding clamp with automatic cable winder
Art. no. 269915

A7

Grounding Monitoring Device
Series 8485 made of Aluminium



- Continuous monitoring of correct earthing
- Potential operator errors are prevented thanks to object detection (on truck)
- Water-jet-proof IP65 stainless steel or aluminum enclosure
- Up to four potential-free change-over contacts for signaling
- Ambient temperature -55 °C to +60 °C
- Auxiliary power: 24 V DC – 230 V AC
- Parameterisation when enclosure is closed

WebCode 8485A

A7

The grounding monitoring device ensures the electrostatic grounding of road tankers, rail cars and Big Bag (Rev. C) while loading flammable liquids and powder.
The device provides a conductive connection to the ground and monitors in parallel the quality of the electrostatic grounding. This guarantees that the electrostatic charge remains at a safe level and that no explosion hazard is generated by uncontrolled energy discharge.
The following recommendation requires grounding during loading and recommends interrupting loading in case of incorrect grounding:
-CLC/TR 60079-32-1 recommendation for avoiding ignition hazards due to electrostatic charges.
-TRBS 727 rules for avoiding ignition hazards as a result of electrostatic charges.

	IECEx / ATEX					
Zone	0	1	2	20	21	22
Ex interface		•	•		•	•
Installation in		•	•		•	•

Selection Table

Product Description		Grounding monitoring device				
Figure	Enclosure material	Product Type	Art. No.	Listprice €	PS	Weight kg
	Aluminium	8485/111-42	263091▲	2994.80	54	12.100

Technical Data

Explosion Protection	
IECEx gas explosion protection	Ex db ib [ib] IIB T4 Gb
IECEx dust explosion protection	Ex ib [ib] tb IIIC T130 °C Db
ATEX gas explosion protection	Ⓔx II 2 G Ex db ib [ib] IIB T4 Gb
ATEX dust explosion protection	Ⓔx II 2 D Ex ib [ib] tb IIIC T130 °C Db
Certificates	ATEX (FTZU), IECEx (FTZU), India (PESO)
Safety Data	
Max. voltage U_i signalling contacts	50 V DC
Max. current I_i signalling contact	200 mA

Technical Data

Electrical Data	
Connections	Maximum diameter, single-wire - rigid 2.5 mm² - flexible 2.5 mm² - flexible, cable end sleeves with plastic cover 1.5 mm² - flexible, cable end sleeves without plastic cover 2.5 mm²
Operating mode selection	Road tanker, rail car and Big Bag recognition Selection via DIP switch
Frequency range	47 – 63 Hz
Auxiliary Power	
Nominal voltage range AC	20 – 230 V
Nominal voltage range DC	20 – 300 V
Nominal current	50 mA
Power consumption	10 VA
Output	
Limit contact	up to 4 changeover contact
Output min. load	10 V DC / 100 mA
Output max. load AC	230 V AC / 3 A
Output max. load DC	230 V DC / 0.25 A, 40 V DC/3 A
Ambient Conditions	
Ambient temperature	-55 °C ... +60 °C
Storage temperature	-55 °C ... +60 °C
Mechanical Data	
Degree of protection (IP)	IP65
Enclosure version	Flameproof enclosure (Ex d)
Cable diameter range of cable glands	6.1 – 11.7 mm

Accessories

Figure	Description	Art. No.	Listprice €	PS	Weight kg
Earth clamp with spiral cable					
	10 m ÖLFLEX with cable gland for 8485/111-42 Clamp made of stainless steel 1.4301 Ambient temperature: -30 ... +60 °C	263025	1108.80	Z2	4.000
Earth clamp with cable					
	10 m ÖLFLEX with cable gland for 8485/111-42 Clamp made of stainless steel 1.4301 Ambient temperature: -40 ... +60 °C	263023	573.70	Z2	2.900
Earth clamp with automatic cable winder					
	Automatic winder with 9 m of oil and petrol resistant cable with robust ergonomic grounding clamp of stainless steel, and fast-action plug, plastic enclosure Installation in Zone 1, IIC, T6; Zone 21, IIIC, 135 °C Temperature range: -40 ... +70 °C Certificates: ATEX, IECEx	247660	1462.50	Z2	4.500
	Automatic winder with 20 m of oil and petrol resistant cable with robust ergonomic grounding clamp of stainless steel, and fast-action plug, aluminium enclosure, protected cable duct with stopper Installation in Zone 1, IIC, T6; Zone 21, IIIC, 135 °C Temperature range: -40 ... +70 °C Certificates: ATEX, IECEx	247671	2466.90	Z2	14.500

Grounding Monitoring Device
Series 8485 made of Aluminium

Accessories

Figure	Description	Art. No.	Listprice €	PS	Weight kg
Configuration set					
	Configuration set for Rev. C devices consisting of infrared adapter with USB port and USB stick with configuration software	263097	346.70	Z2	1.000

Dimensional Drawings (All Dimensions in mm [inches]) – Subject to Alterations

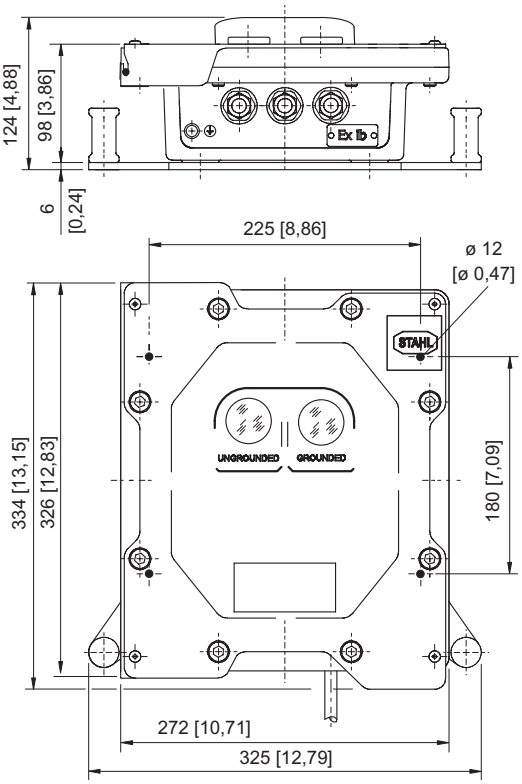

Type 8485/111-42

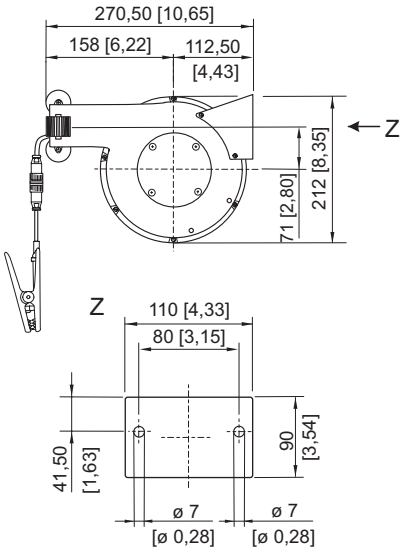

Grounding clamp with automatic cable winder
Art. no. 247660

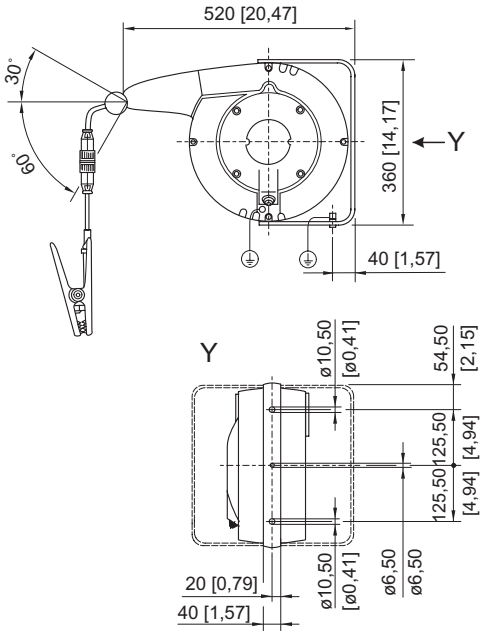

Grounding clamp with automatic cable winder
Art. no. 247671

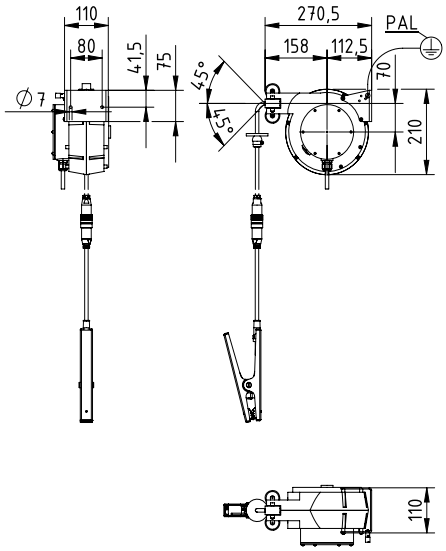

Grounding clamp with automatic cable winder
Art. no. 269915

A7

OPERATING AND MONITORING SYSTEMS



Product	Installation in Zone						Series	Page	WebCode
	0	1	2	20	21	22			
Box PC									
Industrial Box PC								194	IBPC5X1A
HMI Device Platforms									
Device Platform EAGLE Panel Mount Device		•	•		•	•		188	
Device Platform MANTA Operator Station		•	•		•	•		184	
Device Platform MANTA Panel Mount Device		•	•		•	•		186	
Device Platform RAPTOR Operator Interfaces and Operator Stations		•	•		•	•		192	
Device Platform SHARK Operator Station "Rugged Design"		•	•		•	•		190	
HMI Technologies for all Applications									
HMI Technologies for all Applications								182	
Remote HMI Software									
Remote Device Manager								196	
Remote HMI Firmware								195	

For additional products and information please refer to r-stahl.com


T193
T01 15.8
T02 12.0
P05 971
S01 0.0
G03 99
W91 0.20
Soll 35.0
W91 Dosierung 11.9
Gesamt/Trommeln 295 9

HMI Technologies for all Applications

HMI products and solutions from series EXICOM have been designed for worldwide operation in hazardous areas, rough ambient conditions, cleanrooms and onboard ships. Be it in the form of a 7″ Operator Panel or a 24″ terminal, we offer safe high-tech in all shapes and sizes: KVM systems, Thin Clients, Panel PCs, Operator Interfaces and peripherals.

Our four different device platforms provide the ideal solution for each application: SHARK HMIs for oil and gas applications and rough ambient conditions, MANTA HMIs for process automation, GMP and cleanroom applications, universally applicable EAGLE devices for machine automation, and the 7″ RAPTOR Operator Interfaces with integrated software for visualisation and operation of machines, for logistics or for tankfarm automation.

	Device platform SHARK	Device platform MANTA	Device platform EAGLE	Device platform RAPTOR
Area of application	Oil & Gas rough ambient conditions	Process automation GMP- and clean room applications	Machine automation	Oil & Gas rough ambient conditions Machine automation GMP- and clean room applications
Technology	KVM systems Thin Client Panel PC	KVM systems Thin Client Panel PC	Thin Client Panel PC Operator Interface	Operator Interface

A8

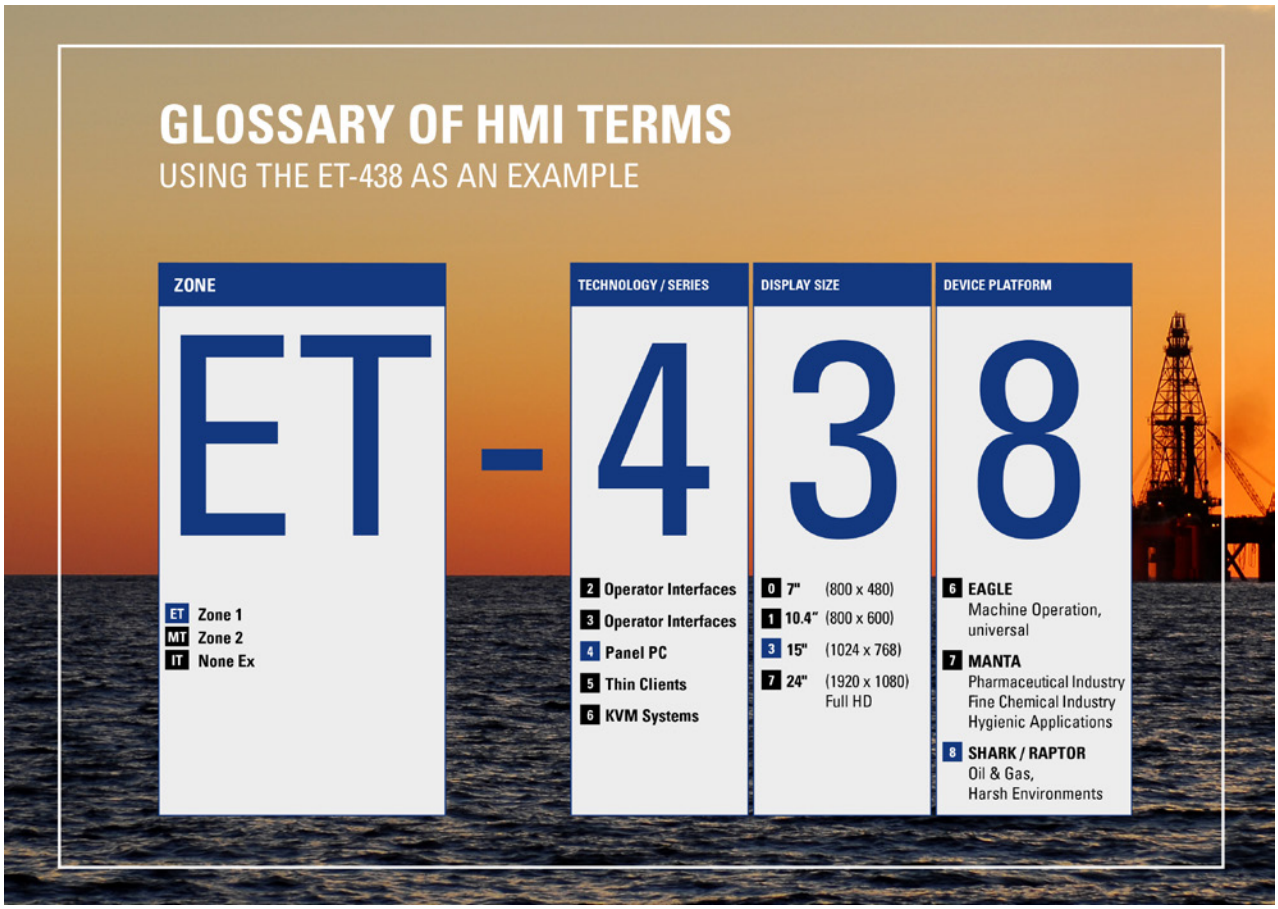

THIN CLIENTS AND PANEL PCS

SERIES 500 consists of THIN CLIENTS and SERIES 400 of PANEL PCs for installation in hazardous and industrial areas. The Thin Clients have been designed for application within modern Server-Client structures, thus providing flexible access options from different HMIs to different servers. The Panel PCs provide additional local applications on-site. Each of our device platforms has a fast processor, such as Intel®, AMD or Atom, which ensure fast software processing. The Panel PCs can also operate in extreme temperatures.

OPERATOR INTERFACES

SERIES 300 and 200 both are Operator Interfaces, i.e. HMI devices with integrated software for visualising and operating machinery and for logistics and tankfarm automation. SERIES 300 with 10″ / 15″ monitors is universally applicable, i.e. also in machine operation. SERIES 200 consisting of 7″ Operator Interfaces is suitable for extreme ambient conditions (e.g. oil & gas), as well as in the pharmaceutical, chemical and life sciences industries.

KVM SYSTEMS

SERIES 600 consists of KVM systems where the data issuing PC is installed separately in the safe area and the HMI on-site in the hazardous or industrial area. KVM systems are ideal for classic point-to-point connections, i.e. for access from one HMI to one dedicated PC.

INDUSTRIAL BOX PC

To be able to benefit fully from the advantages of our industrial-grade REMOTE Firmware, from the field to the control room, we have now launched the IBPC-5x1 Box PC. This Thin Client for the control room has been configured with the Remote HMI Firmware, ensuring a high degree of communication security from the control room to the on-site Thin Client.

PERIPHERALS

Our barcode scanners and RFID readers are modern devices for comfortable data capture and authentication in hazardous areas Zone 1, 2, 21 and 22. The barcode scanners can process all common barcodes and are available wireless or with cable. The RFID readers are universally applicable card readers. Both device groups can also be operated in hazardous areas without our HMIs.

Device Platform MANTA
Operator Station



- Modular Operator Station up to Zone 1, 2, 21, 22, stainless steel enclosure IP66, optionally according to GMP
- Optional resistive glass or foil touch screen
- Thin Client (SERIES 500), Panel PC (SERIES 400) or KVM systems (SERIES 600)

	IECEx / ATEX					
Zone	0	1	2	20	21	22
Installation in		•	•		•	•

	NEC 500 CEC Appendix J					
	Class I		Class II		Class III	
Division	1	2	1	2	1	2
Installation in		•				

	CEC Section 18					
	NEC® 505 Class I			NEC® 506		
Zone	0	1	2	20	21	22
Installation in		•	•			

Selection Table

Technology HMI type	Thin Client Operator station			
Product Type	Art. No.	Listprice €	PS	Weight kg
ET-577-2TX-230A010002V-212011000000	286082	9580.00	40	64.500
ET-577-2TX-2309210002V-212011000000	286110	10995.00	40	64.500
ET-577-2TX-2309210002V-212021000000	286131	10995.00	40	64.500

Technical Data

Variant	ET-577-2TX-230A010002V-212011000000	ET-577-2TX-2309210002V-212011000000	ET-577-2TX-2309210002V-212021000000
Explosion Protection			
Application range (zones)	1 2 21 22	1 2 21 22	1 2 21 22
Certifications	ATEX, IECEx, EAC, NEC, CEC, PESO	ATEX, IECEx, EAC, NEC, CEC, PESO	ATEX, IECEx, EAC, NEC, CEC, PESO
Electrical Data			
Processor type	AMD GX	AMD GX	AMD GX
RAM	4 GB	4 GB	4 GB
Data memory	64 GB SSD	128 GB SSD	128 GB SSD
Ethernet / Data	2x 10/100Base-TX (Ex e)	2x 10/100Base-TX (Ex e)	2x 10/100Base-TX (Ex e)
Operating system	Windows 10 IoT Enterprise	Windows 10 IoT Enterprise	Windows 10 IoT Enterprise
Image	Remote HMI Firmware V6 Basic	Remote HMI Firmware V6 Basic	Remote HMI Firmware V6 Basic
Voltage range AC	100 – 240 V	100 – 240 V	100 – 240 V
Display			
Display size inch	24	24	24
Display resolution	1920 x 1080 / 1680 x 1050 / 1280 x 1024	1920 x 1080 / 1680 x 1050 / 1280 x 1024	1920 x 1080 / 1680 x 1050 / 1280 x 1024
Touchscreen	No Touchscreen	Analogue resistive glass touch	Analogue resistive glass touch

Technical Data

Variant	ET-577-2TX-230A010002V-212011000000	ET-577-2TX-2309210002V-212011000000	ET-577-2TX-2309210002V-212021000000
Mechanical Data			
Ingress protection	IP66	IP66	IP66
Mounting / Installation			
Enclosure type	Stainless steel enclosure V2A (FR)	Stainless steel enclosure V2A (FR)	Stainless steel enclosure V2A (FR)
Mounting type	for mounting on stand	for mounting on stand	for mounting on stand
Components			
Keyboard	Keyboard with trackball, layout German	Keyboard with trackball, layout German	Keyboard with trackball, layout US

Accessories

Figure	Description	Art. No.	Listprice €	PS	Weight kg
Enclosure Accessories					
	HSG-xxx-V2A-MPFL-1240mm-2M25-1M20 Stand with coupling Material: V2A (SS304) 1.4301, brushed 240 Length 1240 mm, diameter: 88.9 mm (pipe), 2x M25 1x M20	252949	1140.00	47	10.000
	HSG-xxx-V2A-MPW-450mm-2M25-1M20 Elbow with coupling Material: V2A (SS304) 1.4301, brushed 240 Length 450 mm, diameter: 60.3 mm (pipe), 2x M25 1x M20	252958	840.00	47	7.000
Storage Media					
	USBi-Drive-64GB USB Stick, intrinsically safe, 64 GB	272515	400.00	43	0.500
	USBi-Drive-64GB-Backup&Recovery USB Stick, intrinsically safe, 64 GB with recovery and backup function	272517	500.00	43	0.500

Barcode scanners and RFID readers are listed in chapter A8 under Peripheral devices.
Information on the Remote HMI Firmware and the central configuration of Thin Clients can be found in Chapter A8 under Remote HMI Firmware and Remote HMI Device Manager.

Possible Versions

Installation in	ET – up to zone 1, 21 MT – up to zone 2, 22 IT – Non-Ex
Technology	Thin Client Remote HMI, AMD GX Panel PC Windows 10 IoT, AMD GX Panel PC Windows 10 IoT, ATOM E3845 1.9 GHz KVM DVI3 system
Touch screen	Resistive foil or glass touch screen
Keyboard layout	DE, US, FR, CH, ES, other on request
Pointing devices	Trackball, touch pad, joystick
Network interfaces	100Base-TX, 100Base-SX, 100Base-LX
Enclosure	Stainless steel V4A Enclosure according to GMP (V2A)
Other versions on request	

Device Platform MANTA

Panel Mount Device



- Modular operator interface up to Zones 1, 2, 21, 22, can be installed in hazardous areas without additional enclosure
- Optional resistive glass or foil touch screen
- Thin Client (SERIES 500), Panel PC (SERIES 400) or KVM systems (SERIES 600)

	IECEx / ATEX					
Zone	0	1	2	20	21	22
Installation in		•	•		•	•

	NEC 500 CEC Appendix J					
	Class I		Class II		Class III	
Division	1	2	1	2	1	2
Installation in		•				

	CEC Section 18					
	NEC® 505 Class I			NEC® 506		
Zone	0	1	2	20	21	22
Installation in		•	•			

Selection Table					
Technology HMI type	Panel PC Panel mount device				
Product Type		Art. No.	Listprice €	PS	Weight kg
ET-477-TX-730A200002R-000000000000		274987	8390.00	40	32.000
Technology HMI type	Thin Client Panel mount device				
Product Type		Art. No.	Listprice €	PS	Weight kg
ET-577-2TX-2309210002V-000000000000		286106	7745.00	40	32.000

Technical Data		
Variant	**ET-477-TX-730A200002R-000000000000**	**ET-577-2TX-2309210002V-000000000000**
Explosion Protection		
Application range (zones)	1 2 21 22	1 2 21 22
Certifications	ATEX, IECEx, EAC, NEC, CEC, PESO	ATEX, IECEx, EAC, NEC, CEC, PESO
Electrical Data		
Processor type	ATOM E3845	AMD GX
RAM	4 GB	4 GB
Data memory	64 GB SSD	64 GB SSD
Ethernet / Data	10/100Base-TX (Ex e)	2x 10/100Base-TX (Ex e)
Operating system	Windows 10 IoT Enterprise	Windows 10 IoT Enterprise
Image		Remote HMI Firmware V6 Basic
Power supply	24 VDC	100 – 240 V
Display		
Display size inch	24	24
Display resolution	1920 x 1080 / 1680 x 1050 / 1280 x 1024	1920 x 1080 / 1680 x 1050 / 1280 x 1024

Technical Data		
Variant	**ET-477-TX-730A200002R-000000000000**	**ET-577-2TX-2309210002V-000000000000**
Display		
Touchscreen	Analogue resistive glass touch	Analogue resistive glass touch

Possible Versions	
Installation in	ET – up to zone 1, 21 MT – up to zone 2, 22 IT – Non-Ex
Technology	Thin Client Remote HMI, AMD GX Panel PC Windows 10 IoT, AMD GX Panel PC Windows 10 IoT, ATOM E3845 1.9 GHz KVM DVI3 system
Touch screen	Resistive foil or glass touch screen
Network interfaces	100Base-TX, 100Base-SX, 100Base-LX, Dual Ethernet 100Base-TX
Other versions on request	

Information on the Remote HMI Firmware and the central configuration of Thin Clients can be found in Chapter A8 under Remote HMI Firmware and Remote HMI Device Manager.

Device Platform EAGLE
Panel Mount Device



- Modular operator interface up to Zones 1, 2, 21, 22, can be installed in hazardous areas without additional enclosure
- Resistive foil touch screen
- Thin Client (SERIES 500), Panel PC (SERIES 400) or Operator Interface (SERIES 300)

A8

	IECEx / ATEX					
Zone	0	1	2	20	21	22
Installation in		•	•		•	•

	NEC 500 / CEC Appendix J					
	Class I		Class II		Class III	
Division	1	2	1	2	1	2
Installation in		•	•	•	•	•

	CEC Section 18					
	NEC® 505			NEC® 506		
	Class I					
Zone	0	1	2	20	21	22
Installation in		•	•			

Selection Table

Technology HMI type	Operator Interface Panel mount device			
Product Type	Art. No.	Listprice €	PS	Weight kg
ET-316-A-TX-62031000004-000000000000	261860	6480.00	40	13.600
Technology HMI type	Panel PC Panel mount device			
Product Type	Art. No.	Listprice €	PS	Weight kg
ET-416-A-TX-7309100000R-000000000000	278844	7985.00	40	13.200
ET-436-A-TX-7309100000R-000000000000	271103	8485.00	40	18.000
Technology HMI type	Thin Client Panel mount device			
Product Type	Art. No.	Listprice €	PS	Weight kg
ET-536-A-TX-7309100000V-000000000000	286132	7585.00	40	18.000

Technical Data

Variant	ET-316-A-TX-62031000004-000000000000	ET-416-A-TX-7309100000R-000000000000	ET-536-A-TX-7309100000V-000000000000
Explosion Protection			
Application range (zones)	1 2 21 22	1 2 21 22	1 2 21 22
Certifications	ATEX, IECEx, NEC, CEC, EAC, KCC, PESO, INMETRO, CCC	ATEX, IECEx, NEC, CEC, EAC, KCC, PESO, INMETRO, CCC	ATEX, IECEx, NEC, CEC, EAC, PESO, INMETRO, CCC
Ship certificates	DNV, ABS, LR	DNV, ABS, LR	DNV, ABS, LR
Electrical Data			
Processor type	ATOM E3815	ATOM E3845	ATOM E3845
RAM	2 GB	4 GB	4 GB
Data memory	16 GB SSD	128 GB SSD	128 GB SSD

Technical Data

Variant	ET-316-A-TX-62031000004-000000000000	ET-416-A-TX-7309100000R-000000000000	ET-536-A-TX-7309100000V-000000000000
Electrical Data			
Ethernet / Data	10/100Base-TX (Ex e)	10/100Base-TX (Ex e)	10/100Base-TX (Ex e)
Operating system	Windows Embedded Compact 7	Windows 10 IoT Enterprise	Windows 10 IoT Enterprise
Image	Movicon CE 4096 I/O Runtime		Remote HMI Firmware V6 Basic
Power supply	24 VDC	24 VDC	24 VDC
Display			
Display size inch	10	10	15
Total pixels	800 x 600	800 x 600	1024 x 768
Touchscreen	Analogue resistive film touch screen	Analogue resistive film touch screen	Analogue resistive film touch screen

Accessories

Figure	Description	Art. No.	Listprice €	PS	Weight kg
Software					
	Movicon11-Dongle Project engineering software Progea Movicon11 (for devices with Progea Movicon Runtime)	241090	1950.00	43	0.500
Storage Media					
	USBi-Drive-64GB USB Stick, intrinsically safe, 64 GB	272515	400.00	43	0.500
	USBi-Drive-64GB-Backup&Recovery USB Stick, intrinsically safe, 64 GB with recovery and backup function	272517	500.00	43	0.500

Barcode scanners and RFID readers are listed in chapter A8 under Peripheral devices.
Information on the Remote HMI Firmware and the central configuration of Thin Clients can be found in Chapter A8 under Remote HMI Firmware and Remote HMI Device Manager.

Possible Versions

Installation in	ET – up to zone 1, 21 MT – up to zone 2, 22
Technology	Thin Client Remote HMI, ATOM E3845 1.9 GHz Panel PC Windows 10 IoT, ATOM E3845 1.9 GHz Operator interface ATOM E3815, Windows Embedded Compact 7, SPSPlus Runtime Operator interface ATOM E3815, Windows Embedded Compact 7, Movicon CE 4096 I/O Runtime
Network interfaces	100Base-FX
Operator Station	Stainless steel V2A or V4A Operator Station IP66
Other versions on request	

Device Platform SHARK
Operator Station "Rugged Design"



- Operator Station with 15- or 21.5 inch display
- Rugged Design: IP66, shock, vibration and seawater-proof
- Temperature range -40 °C to +65 °C
- Compact, lightweight HMI design with 15 inch display
- Optional sunlight-readable SR display >1000 cd/m²

A8

	IECEx / ATEX					
Zone	0	1	2	20	21	22
Installation in		•	•		•	•

	NEC 500 CEC Appendix J					
	Class I		Class II		Class III	
Division	1	2	1	2	1	2
Installation in		•	•	•	•	•

	CEC Section 18					
	NEC® 505 Class I			NEC® 506		
Zone	0	1	2	20	21	22
Installation in		•	•		•	•

Selection Table

Technology	Panel PC
HMI type	Operator Station Rugged Design

Product Type	Art. No.	Listprice €	PS	Weight kg
ET-438-2TX-931C313000R-B30500000000	286094	12850.00	40	23.000
ET-498-2TX-931C313000R-B30500000000	275445	13370.00	40	35.000

Technical Data

Variant	ET-438-2TX-931C313000R-B30500000000	ET-498-2TX-931C313000R-B30500000000
Explosion Protection		
Application range (zones)	1 2 21 22	1 2 21 22
Certifications	ATEX, IECEx, EAC, NEC, CEC, CCC, PESO	ATEX, IECEx, EAC, NEC, CEC, CCC, PESO
Ship certificates	DNV, ABS	DNV, ABS
Electrical Data		
Processor type	Intel i5	Intel i5
RAM	4 GB	4 GB
Data memory	240 GB SSD	240 GB SSD
Ethernet / Data	2x 10/100/1000Base-TX (Ex e)	2x 10/100/1000Base-TX (Ex e)
Operating system	Windows 10 IoT Enterprise	Windows 10 IoT Enterprise
Ambient Conditions		
Ambient temperature operation	-40 °C ... +65 °C	-40 °C ... +65 °C
Display		
Display size inch	15	21.5
Display resolution	1024 x 768	1920 x 1080
Touchscreen	Capacitive multi-touch	Capacitive multi-touch

Accessories

Figure	Description	Art. No.	Listprice €	PS	Weight kg
Enclosure Accessories					
	HSG-x38-V4A-SUNSHADE-KIT Sun roof with bracket for x38 devices including handle Material: V4A (SS316L) 1.4404, brushed 240 Dimensions (WxHxD): 596 mm x 546 mm x 136 mm	267446	1020.00	47	4.500
	HSG-x98-V4A-SUNSHADE-KIT Sun roof with bracket for x98 devices including handle Material: V4A (SS316L) 1.4404, brushed 240 Dimensions (WxHxD): 596 mm x 546 mm x 136 mm	267445	1020.00	47	7.000
	HSG-xx8-V4A-FEET-SET 1 pair feet Material: V4A (SS316L) 1.4404, brushed 240 Dimensions (WxHxD): 94 mm x 192 mm x 195 mm	267455	210.00	47	–
	HSG-xx8-V4A-HANDLE Handle Material: V4A (SS316L) 1.4404, brushed 240 Dimensions (WxHxD): 361 mm x 186 mm x 27 mm	267447	170.00	47	–
	HSG-xx8-V4A-HANDLE-FEET-KIT Set consisting of handle and feet Material: V4A (SS316L) 1.4404, brushed 240 Dimensions handle (WxHxD): 361 mm x 186 mm x 27 mm Dimensions feet (WxHxD): 94 mm x 192 mm x 195 mm	267456	350.00	47	–
	HSG-xx8-V4A-WALL-MOUNT-KIT Mounting kit for wall mount of xx8 device swiveling for connection Material: V4A (SS316L) 1.4404, brushed 240 Dimensions (WxHxD): 60 mm x 430 mm x 183 mm including screws for display mounting	267443	570.00	47	4.900
	HSG-xx8-V4A-YOKE-MOUNT-FIX Yoke mount for xx8 devices Mounting on stand or ellbow Material: V4A (SS316L) 1.4404, brushed 240 2x M20, 1x M25 Dimensions (WxHxD): 379,5 mm x 347,5 mm x 156 mm	267444	930.00	47	4.700
	HSG-xxx-V4A-MPFL-1240mm-2M25-1M20 Stand with coupling Material: V4A (SS316L) 1.4404, brushed 240 Length 1240 mm, diameter: 88.9 mm (pipe), 2x M25 1x M20	252950	1665.00	47	10.000
Keyboard / Pointing device Ex i					
	KBDi-USB-J-DE-HSG-xx8-V4A-YM Keyboard with integrated joystick USB interface 3/5 keys, V4A stainless-steel enclosure (SS316L) Keyboard language: DE, QWERTZ	256794	2690.00	43	12.500
Storage Media					
	USBi-Drive-64GB USB Stick, intrinsically safe, 64 GB	272515	400.00	43	0.500
	USBi-Drive-64GB-Backup&Recovery USB Stick, intrinsically safe, 64 GB with recovery and backup function	272517	500.00	43	0.500

Possible Versions

Installation in	ET – up to zone 1, 21 MT – up to zone 2, 22
Technology	Panel PC Windows 10 IoT, Intel i7 or i5 Thin Client Remote HMI, Windows 10 IoT, AMD GX Thin Client Remote HMI, Windows 10 IoT, Intel i7 or i5 KVM DVI3 system
Network interfaces	2x 100Base-FX, 1x 10/100/1000Base-TX + WLAN (WLAN not for KVM systems)
Further options	Bluetooth, RFID (only 21.5“)
Other versions on request	

Device Platform RAPTOR

Operator Interfaces and Operator Stations



- Operator interface up to Zones 1, 2, 21, 22, can be installed in hazardous areas without additional enclosure
- Projected-capacitive glass touch screen
- Flexible enclosure configuration possible with up to 32 individual buttons for Operator Station

	IECEx / ATEX					
Zone	0	1	2	20	21	22
Installation in		•	•		•	•

	NEC 500 CEC Appendix J					
	Class I		Class II		Class III	
Division	1	2	1	2	1	2
Installation in		•		•	•	•

	CEC Section 18					
	NEC® 505 Class I			NEC® 506		
Zone	0	1	2	20	21	22
Installation in		•	•		•	•

Selection Table					
Technology HMI type	Operator Interface Panel mount device				
Product Type		Art. No.	Listprice €	PS	Weight kg
ET-208-TX-40103000004-000500000000		246222	4280.00	40	5.000

Technical Data	
Explosion Protection	
Application range (zones)	1 2 21 22
Certifications	ATEX, IECEx, EAC, NEC, CEC, PESO, CCC, JPNEx, KCC
Electrical Data	
Processor type	Cortex A8
Ethernet / Data	10/100Base-TX (Ex e)
Operating system	Windows Embedded Compact 7
Image	Movicon CE 4096 I/O Runtime
Power supply	24 VDC
Display	
Display size inch	7
Total pixels	800 x 480
Touchscreen	Capacitive glass touch screen

Accessories

Figure	Description	Art. No.	Listprice €	PS	Weight kg
Software					
	Movicon11-Dongle Project engineering software Progea Movicon11 (for devices with Progea Movicon Runtime)	241090	1950.00	43	0.500
Storage Media					
	USBi-Drive-64GB USB Stick, intrinsically safe, 64 GB	272515	400.00	43	0.500
	USBi-Drive-64GB-Backup&Recovery USB Stick, intrinsically safe, 64 GB with recovery and backup function	272517	500.00	43	0.500

Barcode scanners and RFID readers are listed in chapter A8 under Peripheral devices.

Possible Versions

Operator Station	Stainless steel V2A or V4A Operator Station IP66
Other versions on request	

Industrial Box PC



- The IBPC-5x1 for the control room ensures secure process communication from the field to the control room
- With integrated REMOTE Firmware on the basis of Windows® 10 IoT Enterprise LTSB (Microsoft support until 2026)
- Integrated UWF and FORM filter
- Powerful AMD dual core processors with 4 GB RAM
- Dual-monitor operation and resolutions up to state-of-the-art Ultra-HD 4K

WebCode IBPC5X1A

CE

Our latest version of the REMOTE HMI Firmware was developed for highly secure and permanent process communication - AUTOMATIC RECONNECT, FALLBACK MECHANISM and ETHERNET REDUNDANCY as well as various error messages and diagnosis tools are integrated.
To be able to benefit fully from the advantages of this industrial-grade firmware, from the field to the control room, we have now launched the IBPC-5x1 Box PC. This Thin Client for the control room has been configured with the Remote HMI Firmware, ensuring a high degree of communication security from the control room to the on-site Thin Client.

Selection Table

Technology	Thin Client				
Product Type		Art. No.	Listprice €	PS	Weight kg
IBPC-5x1-2TX-23X401000XV-000000000000		286083	1309.00	40	1.000

Technical Data

Electrical Data	
Power supply	only via external power supply adapter
Processor type	AMD GX-222GC
Processor details	2.2 – 2.4 GHz; Dual Core, 10W TDP
RAM	4 GB (DDR3 / 1600)
Data memory	32 GB
Operating system	Windows 10 IoT Enterprise 2016 LTSB (64 bit)
Image	Remote HMI Firmware V6 Basic
Ethernet / Data	2 x 10/100/1000 Mbit
Interface USB	4 x USB 2.0
Interface display	1x DVI-I 1 x Display Port (DP V1.2)
Maximum resolution	DVI: 1920 x 1200 DP: 3840 x 2160
Ambient Conditions	
Ambient temperature operation	0 °C … +35 °C
Temperature note 1	+50 °C with optional fan
Mechanical Data	
Dimensions (WxHxD)	250 mm x 52 mm x 191 mm (without feet)

Information on the Remote HMI Firmware and the central configuration of Thin Clients can be found in Chapter A8 under Remote HMI Firmware and Remote HMI Device Manager.



- Industrial-grade Thin Client Firmware
- Basic licence Remote HMI Firmware V6 Basic
- Upgrade licence Remote HMI Firmware V6 Pro

The Remote HMI V6 Firmware is a Thin Client software developed for the process industry which is supplied together with SERIES 500 operating devices. It is used to establish and secure remote connections to one or more workstations or application servers. This enables remote access from one operating station to one or more workstations or servers.
The following licence models are available:

Remote HMI Firmware V6 Basic

Basic licence for establishing remote connections with RDP and VNC and for configuring the firmware at the device itself or via the Remote HMI Device Manager (RDM). The basic licence comes pre-installed with the device.

Remote HMI Firmware V6 Pro

Option for using and administrating applications and supporting Multi-session. Can be licenced retrospectively at the device or via the Remote HMI Device Manager.

Selection Table

Version	Remote HMI V6 Firmware				
Product Type	Description	Art. No.	Listprice €	PS	Weight kg
Remote HMI V6 Pro licence single	Single licence for function extension for one Thin Client to include use of Apps and Multi-session.	283451	200.00	43	–
Remote HMI V6 Pro licence pack 5	Licence key for function extension for 5 Thin Clients to include use of Apps and Multi-session.	283410	1000.00	43	–
Remote HMI V6 Pro licence pack 10	Licence key for function extension for 10 Thin Clients to include use of Apps and Multi-session.	283521	2000.00	43	–
Remote HMI V6 Pro licence pack 25	Licence key for function extension for 25 Thin Clients to include use of Apps and Multi-session.	283522	5000.00	43	–
Remote HMI V6 Basic Update	Firmware update from Remote HMI Firmware V5.xx to V6. Needed to use the Thin Client with the Remote Device Manager. Requires Remote HMI Firmware level V5.	283320	200.00	43	–

Remote Device Manager



- Central management of all Thin Clients
- Central configuration of all Thin Clients

The Remote HMI Device Manager is used for central management and configuration of all Thin Clients with Remote HMI Firmware V6 and above.

A8

Selection Table

Version	Remote Device Manager				
Product Type	Description	Art. No.	Listprice €	PS	Weight kg
RDM licence single	Single licence for one Thin Client using the Remote Device Manager (RDM).	283452	500.00	43	–
RDM licence pack 5	Licence key for addition of 5 Thin Clients to the Remote Device Manager (RDM).	283453	1960.00	43	–
RDM licence pack 10	Licence key for addition of 10 Thin Clients to the Remote Device Manager (RDM).	283454	4275.00	43	–
RDM licence pack 25	Licence key for addition of 25 Thin Clients to the Remote Device Manager (RDM).	283455	10800.00	43	–


EXICOM
MPR Industries
RESET
Mode
SAFETY
LOCAL
MANUAL
AUTO
P-01
P-02
P-03
P-04
ALARM
F1
F2
F3
F4
F5
F6
F7
F8



CAMERA AND VIDEO SYSTEMS

Product	Installation in Zone						Series	Page	WebCode
	0	1	2	20	21	22			
Camera and Video Systems									
Camera Systems for all Areas								199	
Colour Camera IP									
Full HD IP Pan-Tilt-Zoom Camera		•	•		•	•	EC-941	203	EC941A
Full HD IP Zoom Camera		•	•		•	•	EC-910-AFZ-10x	202	EC910AFZA
Full HD IP Zoom Camera		•	•		•	•	EC-910-AFZ-3x	201	EC910AFZA

For additional products and information please refer to r-stahl.com

Trust but verify

Increased safety

Camera systems play an increasingly important role for the safety onboard ships, drill rigs or in production plants - they are used to monitor work areas and processes to ensure general safety. Our “automated surveillance”, combining camera systems with powerful software, guarantees that every part of the plant, even the hazardous areas, can be monitored. Areas not easily accessible can be monitored by the smallest explosion proof camera in the world; video surveillance is a job for the state-of-the-art Dome camera, and we offer a great variety of PTZ cameras for zoom and pan-tilt functions. The cameras from R. STAHL HMI Systems GmbH enable security staff to react quickly to any potential safety problems and thus prevent emergencies. If an emergency occurs, the cameras provide a comprehensive overview of the situation, thus enabling staff to make the necessary decisions preventing the situation from escalating.

Greater efficiency

In their everyday work system, operators profit from the advantages of a camera surveillance system. An improved overview of their workplace and its surroundings gives them control of the situation and enables them to work more efficiently and accurately. It is also possible to issue proactive warnings to anyone entering hazardous areas.

Damage limitation

Despite everyone’s best efforts, it is not always possible to prevent accidents. Operating large machinery in tight spaces with many blind spots carries risks for life and machinery. A camera system from R. STAHL HMI Systems provides an extra pair of eyes - regardless of which machinery is used in which environment. Injuries or breakdowns can thus be prevented.

Improved ergonomics and user-friendliness

In most cases, cameras contribute towards improved ergonomics and user-friendliness. Fewer people need to be present in dangerous or hazardous areas. It is possible to distribute video images via a network, thus enabling several workers with different tasks to monitor the situation simultaneously and in real time. With the aid of visual feedback, decisions can be made from remote positions.

From the Compact camera to the Dome camera

From component to complete system

Various camera types and appropriate video systems ensure optimal monitoring of installation conditions in hazardous and non-hazardous areas, and thus the highest degree of system safety. The smallest explosion proof camera in the world monitors very narrow rooms; the dome camera has been developed for video surveillance, while our PTZ and zoom camera has additional vertical pan and zoom functions. The explosion-proof thermal imaging cameras by R. STAHL HMI Systems ensure optimum monitoring day and night, for example on oil rigs. All cameras have been designed for hazardous areas and for installation in extreme ambient temperatures. Basically, there are two functional principles for camera systems that have decisive advantages depending on the existing application and requirements.

Camera Systems for all Areas

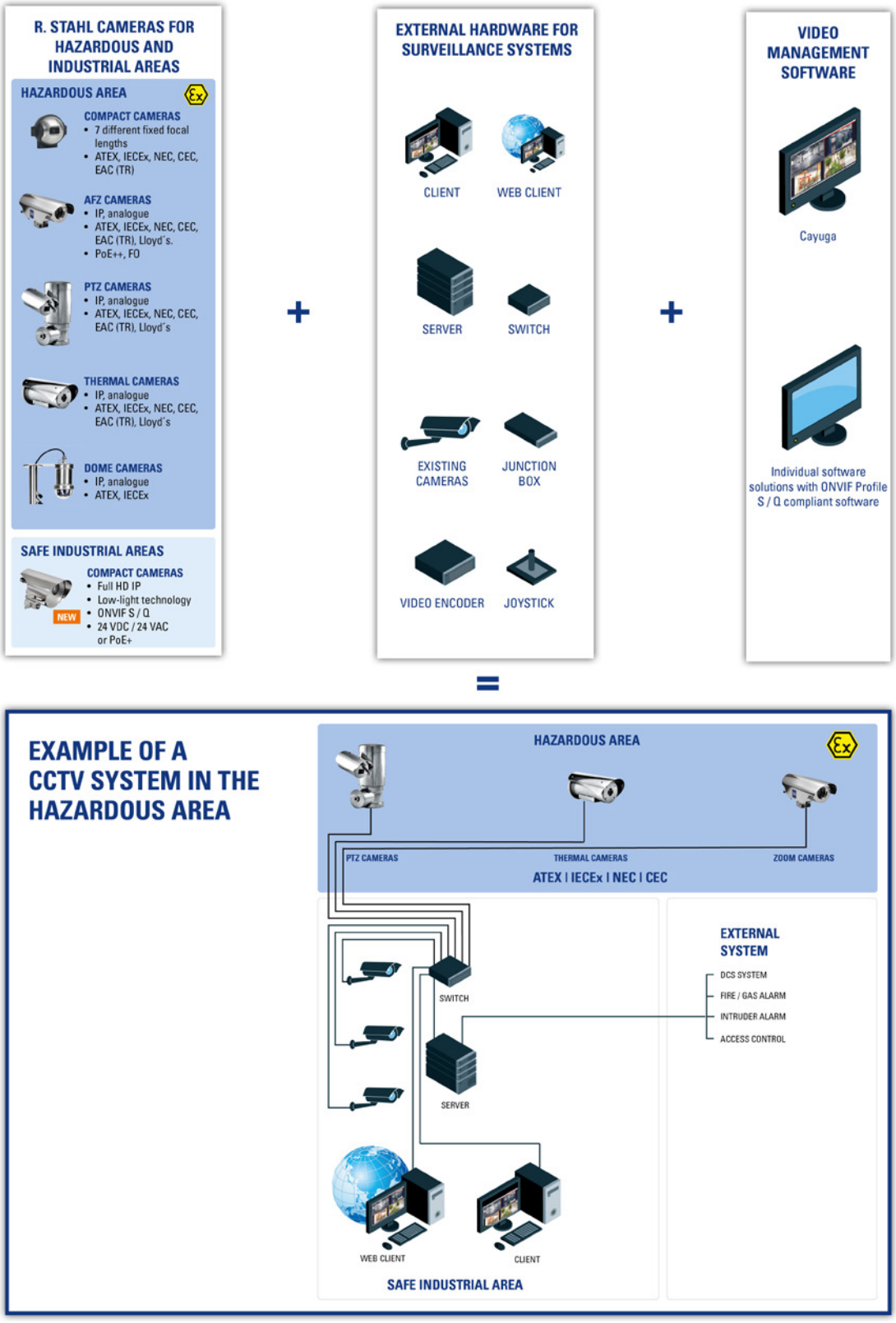

A9



- All-round Full HD zoom camera with 3x zoom
- PoE+, 24 VDC or 24 VAC
- Including wall / ceiling mount bracket
- Zones 1, 2, 21, 22
- Day / night, WDR, ONVIF S and Q
- Available without cable or with a 4 m or 10 m long armoured multi-cable

WebCode EC910AFZA

The EC-910-AFZ PoE+ camera combines state-of-the-art camera technology with Full HD resolution, WDR and zoom function for hazardous areas. The light-sensitive 3x zoom version features an extreme viewing angle of up to 90° (horizontal), making it ideal for monitoring rooms or inspection windows.
To ensure guaranteed resistance to adverse weather, the EC-910-AFZ-I03 with 3x zoom has been tested and certified by Lloyd's Register for marine application. Lloyd's attests the camera's reliability with regard to temperature, corrosion and vibration resistance as well as EMC.
Their design makes the cameras universally applicable in the oil and gas industries and in the chemical, pharmaceutical and related industries. The camera is certified acc. to ATEX, IECEx for Zone 1, 2, 21, 22. Additional certificates available are NEC C1 D2, CEC C1 Z1, EAC. The stainless-steel sun-protection and the wall / ceiling mount bracket are part of the standard delivery.

	IECEx / ATEX					
Zone	0	1	2	20	21	22
Installation in		•	•		•	•

Selection Table

Focus	Automatic focus
Zoom	3x optical
Resolution	Full HD to 320x180p
Viewing angle	90° (wide), 32° (tele.)
Network protocol	ONVIF profile S and Q

Product Type	Connection cable	Cable length	Certifications	Art. No.	Listprice €	PS	Weight kg
EC-910-AFZ-I03-P04	with cable	4 m	ATEX, IECEx, EAC	265897	2850.00	A3	8.500

Full HD IP Zoom Camera

Series EC-910-AFZ-10x



- All-round Full HD zoom camera with 10x zoom
- PoE+, 24 VDC or 24 VAC
- Including wall / ceiling mount bracket
- Zones 1, 2, 21, 22
- Day / night, WDR, ONVIF S and Q
- Available without cable or with a 4 m or 10 m long armoured multi-cable

WebCode EC910AFZA

The EC-910-AFZ PoE+ camera combines state-of-the-art camera technology with Full HD resolution, WDR, zoom and defog function for hazardous areas. The 10x zoom version provides sharp, crystal-clear images and is universally applicable in the oil and gas industries and in the chemical, pharmaceutical and related industries.

To ensure guaranteed resistance to adverse weather, the EC-910-AFZ-I10 with 10x zoom has been tested and certified by Lloyd's Register for marine application. Lloyd's attests the camera's reliability with regard to temperature, corrosion and vibration resistance as well as EMC.

The camera is certified acc. to ATEX, IECEx for Zone 1, 2, 21, 22. Additional certificates available are NEC C1 D2, CEC C1 Z1, EAC. The stainless-steel sun-protection and the wall / ceiling mount bracket are part of the standard delivery.

	IECEx / ATEX					
Zone	0	1	2	20	21	22
Installation in		•	•		•	•

Selection Table

Focus	Automatic focus
Zoom	10x optical
Resolution	Full HD to 320x180p
Viewing angle	67° (wide), 7.6° (tele)
Network protocol	ONVIF profile S and Q

Product Type	Connection cable	Cable length	Certifications	Art. No.	Listprice €	PS	Weight kg
EC-910-AFZ-I10-P04	with cable	4 m	ATEX, IECEx, EAC	265900	3348.00	A3	8.500



- Certified for hazardous Zones 1, 2, 21, 22 acc. to ATEX, IECEx, NEC, CEC, EAC, LR
- Low-light technology for particularly detailed images even in difficult light conditions, day / night - functionality
- Enclosure made from shot-peened and electropolished stainless steel (316L, 1.4404), ideal for clean rooms as well as the oil and gas industries
- Extremely precise pan-tilt surveillance camera with Full HD resolution (1920 x 1080)
- Electronic image stabilizer, dynamic masking, SFP module slot for direct fiber optic connection

WebCode **EC941A**

Use R. STAHL's EC-941 camera to keep all monitored areas in perfect view and to pan from one object to the next in no time at all - after all, it is the fastest pan-tilt camera for hazardous areas. Its Full HD resolution provides detailed images, and a wiper ensures free view at all times, making this surveillance camera ideal for all-round and detailed surveillance. It can be incorporated into state-of-the-art video systems worldwide, using the ONVIF protocol (Profile Q, S and T). In addition, it is seawater-proof, has ingress protection IP66 and can be used at temperatures from -40 °C to +65 °C, for example on drilling rigs, refineries or tankfarms, as well as for monitoring processes in the chemical and pharmaceutical production and in clean rooms.

	IECEx / ATEX					
Zone	0	1	2	20	21	22
Installation in		•	•		•	•

	NEC 500 CEC Appendix J					
	Class I		Class II		Class III	
Division	1	2	1	2	1	2
Installation in		•		•		

	CEC Section 18					
	NEC® 505			NEC® 506		
	Class I					
Zone	0	1	2	20	21	22
Installation in		•	•		•	•

Selection Table

Resolution	Full HD 1080p 1920x1080 pixel
Viewing angle	63.7° - 2.3° H, 38.5° - 1.3° V
Horizontal speed (vari)	0,1°/s ... 100°/s
Vertical speed (vari)	0,1°/s ... 100°/s
Accuracy of presetpositions	0.02 °
Focus	Auto, manual, trigger
Network protocol	ONVIF Profile Q,S,T
Degree of protection (IP)	IP66, 67, 68, 69

Product Type	Rated operational voltage AC	Rated operational current AC	Art. No.	Listprice €	PS	Weight kg
EC-941-V1C02T0M000	230 V	0.5 A	278310	13190.00	A3	26.500
EC-941-V2C02T0M000	24 V	5 A	278701	13190.00	A3	26.500
EC-941-V3C02T0M000	120 V	1 A	278702	13190.00	A3	26.500



LIGHTING

Product	Installation in Zone						Series	Page	WebCode
	0	1	2	20	21	22			
Compact Light Fittings									
C-LUX Compact Light Fittings		•	•		•	•	6102	227	6102A
Linear Luminaire for Fluorescent Lamps									
Linear Luminaire for Fluorescent Lamps EXLUX		•	•		•	•	6001	217	6001A
Linear Luminaire for Fluorescent Lamps EXLUX			•		•	•	6401	222	6401A
Linear Luminaire with LED									
Linear Luminaire with LED EXLUX		•	•		•	•	6002/4	205	6002D
Linear Luminaire with LED EXLUX			•		•	•	6402/4	211	6402C
Pendant Light Fittings									
Universal Spotlight LED		•	•		•	•	6050/6	238	6050C
Universal Spotlight LED Series 6050/6 Light Distribution Curves								244	
Tubular Light Fittings									
Tubular Light Fitting with LED		•	•		•	•	6036	231	6036A
Tubular Light Fitting with LED Series 6036 Light Distribution Curves								237	

For additional products and information please refer to r-stahl.com



- The latest LED technology with a high luminous efficacy and a long service life
- Extremely high luminaire efficacy
- Luminous flux after 100,000 h still 90% of the starting luminous flux
- Optionally with DALI for controlling and monitoring the luminaire
- Optionally addressable for direct actuation of a common battery system

WebCode **6002D**

The linear luminaire with Series 6002/4 LED is ideal for lighting surfaces at a mounting height of up to 10 m. It can also be used to illuminate equipment and objects, both inside and outside. The pole mounting sleeve accessory can be used to easily mount the luminaire on poles. Optionally, the luminaire can be equipped with addressable equipment. It can be used to control and monitor the luminaire for the common battery systems.

	IECEx / ATEX					
Zone	0	1	2	20	21	22
Installation in		•	•		•	•

Selection Table

Design size	2
Translucent cover	clear
Light distribution	120°x120° with diffusing glass
Lamp wattage	22 W
Luminous flux	2910 lm
Luminaire efficacy	132 lm/W

Product variant	Drilled holes	Disconnection of the luminaire	Colour temperature	Threaded plate	Cable entries	Stopping plug	Product Type	Art. No.	Listprice €	PS	Weight kg
standard	3 x M25	No	5000 K	2x plastic	2 x M25 Ø 7 – 17 mm	2 x M25 x 1.5	6002/4128-0100-152-1110-11-8500	267058 ▲	515.00	64	4.450
	3 x M20	No	5000 K	2x SS430 stainless steel	Can be ordered as accessories	Can be ordered as accessories	6002/4128-0100-152-2220-22-8500	267067 ▲	546.00	64	4.400
		Yes	4000 K	2x SS430 stainless steel	Can be ordered as accessories	Can be ordered as accessories	6002/4128-0101-152-2220-22-8400	271826	670.00	64	4.550
		Yes	5000 K	2x SS430 stainless steel	Can be ordered as accessories	Can be ordered as accessories	6002/4128-0101-152-2220-22-8500	268133	628.00	64	4.550

Linear Luminaire with LED EXLUX

Series 6002/4

Selection Table

Design size	4
Translucent cover	clear
Light distribution	120°x120° with diffusing glass
Lamp wattage	42 W
Luminous flux	5810 lm
Luminaire efficacy	138 lm/W

Product variant	Drilled holes	Disconnection of the luminaire	Colour temperature	Threaded plate	Cable entries	Stopping plug	Product Type	Art. No.	Listprice €	PS	Weight kg
standard	3 x M25	No	5000 K	2x plastic	2 x M25 Ø 7 – 17 mm	2 x M25 x 1.5	6002/4148-0100-152-1110-11-8500	267074▲	700.00	64	6.900
	3 x M20	No	5000 K	2x SS430 stainless steel	Can be ordered as accessories	Can be ordered as accessories	6002/4148-0100-152-2220-22-8500	267077	731.00	64	6.900
		Yes	4000 K	2x SS430 stainless steel	Can be ordered as accessories	Can be ordered as accessories	6002/4148-0101-152-2220-22-8400	271827	824.00	64	6.900
		Yes	5000 K	2x SS430 stainless steel	Can be ordered as accessories	Can be ordered as accessories	6002/4148-0101-152-2220-22-8500	268134	752.00	64	6.900

Design size	6
Translucent cover	clear
Light distribution	120°x120° with diffusing glass
Lamp wattage	50 W
Luminous flux	6960 lm
Luminaire efficacy	139 lm/W

Product variant	Drilled holes	Disconnection of the luminaire	Colour temperature	Threaded plate	Cable entries	Stopping plug	Product Type	Art. No.	Listprice €	PS	Weight kg
standard	3 x M25	No	5000 K	2x plastic	2 x M25 Ø 7 – 17 mm	2 x M25 x 1.5	6002/4168-0200-152-1110-11-8500	278349	859.00	64	8.000
	3 x M20	Yes	4000 K	2x SS430 stainless steel	Can be ordered as accessories	Can be ordered as accessories	6002/4168-0201-152-2220-22-8400	276339	901.00	64	8.000
		Yes	5000 K	2x SS430 stainless steel	Can be ordered as accessories	Can be ordered as accessories	6002/4168-0201-152-2220-22-8500	276338	880.00	64	8.000

Cable entries and stopping plugs made from moulded material are included loose with the product (installation required).
Threaded plate included.

The light fittings are supplied without mounting material.

Technical Data

Variant	Size 2, size 4	Size 6
Explosion Protection		
IECEx gas explosion protection	Ex db eb ib mb op is IIC T4 Gb	Ex db eb ib mb op is IIC T4 Gb
IECEx dust explosion protection	Ex tb op is IIIC T100 °C Db	Ex tb op is IIIC T100 °C Db
ATEX gas explosion protection	Ⓔx II 2 G Ex db eb ib mb op is IIC T4 Gb	Ⓔx II 2 G Ex db eb ib mb op is IIC T4 Gb
ATEX dust explosion protection	Ⓔx II 2 D Ex tb op is IIIC T100 °C Db	Ⓔx II 2 D Ex tb op is IIIC T100 °C Db
Certificates	ATEX (IBE), Brazil (ULB), China (CQST), EAC (ENDCE), IECEx (IBE), India (PESO), Japan (CML), Taiwan (ITRI)	ATEX (IBE), Brazil (ULB), China (CQST), IECEx (IBE)
Ship approval	DNVGL	DNVGL
Electrical Data		
Rated operational voltage AC	100 – 240 V	110 – 240 V
Rated operational voltage DC	110 – 250 V	110 – 250 V
Frequency range	50 – 60 Hz	50 – 60 Hz
Ambient Conditions		
Ambient temperature	-40 °C ... +50 °C Note: Through wiring max. 3x16 A -40 °C ... +60 °C Note: Through wiring 2 max. 3x10 A	-20 °C ... +50 °C Note: Through wiring max. 3x16 A -20 °C ... +60 °C Note: Through wiring 2 max. 3x10 A
Lighting Data		
Number of lamps	1	1

Technical Data

Variant	Size 2, size 4	Size 6
Lighting Data		
Lamp	LED	LED
Light colour	see selection table	see selection table
Colour rendering	≥ 80	≥ 80
Mechanical Data		
Impact strength (IEC 62262)	IK10	IK10
Degree of protection IP (IEC 60598)	IP66/IP67	IP66
Enclosure colour	Light grey (RAL 7035)	Light grey (RAL 7035)
Enclosure material	Polyester resin, Glass fibre reinforced	Polyester resin, Glass fibre reinforced
Diffuser	With diffuser	With diffuser
Sealing material	Silicone	Silicone
Connection terminals solid max.	6 mm²	6 mm²
Connection terminals finely-stranded max.	4 mm²	4 mm²
Type of connection cable	Solid Finely stranded	Finely stranded Solid
Notes	Connection terminals: Spring clamp terminal (2 free clamping units per pole)	
Components		
Ballast	6045/211-120-10	6045/211-110-10
Through wiring	With 5 conductors 2.5 mm²	With 5 conductors 2.5 mm²

Accessories

Figure	Description	Art. No.	Listprice €	PS	Weight kg
Breather					
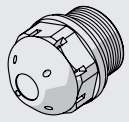	Thread: M25 x 1.5; 1 pc; for installation in lights; in moulded material; without counter nut	138573▲	9.90	10	0.010
	Thread: M25 x 1.5; 20 pc; for installation in lights; in moulded material; without counter nut	138576▲	186.00	10	0.200
Ceiling and wall mounting bracket					
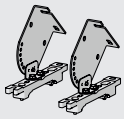	mounted on a mounting rail for a variable mounting distance; Material: stainless steel; Lamp can be swiveled in steps of 15°; 1 pair	222827▲	43.00	Z3	1.200
Mounting bracket					
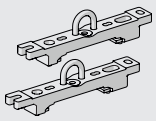	mounting clamp mounted on a mounting rail for a variable mounting distance; 1 pair	222456▲	18.00	Z3	0.400
Mounting rail					
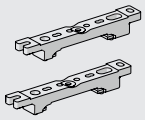	for a variable mounting distance; 1 pair	222826▲	13.00	Z3	0.350
Pipe clamp					
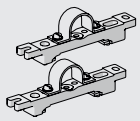	R 1 1/2"; with mounting rail for a variable mounting distance; Material: stainless steel; 1 pair	222459▲	17.00	Z3	0.800
	R 1 1/4"; with mounting rail for a variable mounting distance; Material: stainless steel; 1 pair	222458▲	17.00	Z3	0.700
	R 2"; with mounting rail for a variable mounting distance; Material: stainless steel; 1 pair	222460▲	18.00	Z3	0.750

▲ Preferred products – in stock or available at short notice

Accessories

Figure	Description	Art. No.	Listprice €	PS	Weight kg
Pole mounting sleeve					
	for the subsequent mounting on lights size 2 and size 4, completely with assembly parts (for pipe diameter 42 mm)	227512	74.00	Z3	3.200
Ring bolt					
	M8, direct mounting in insert nuts; 1 pair	115736▲	11.00	Z3	0.115
Socket key					
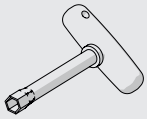	M8 / wrench size 13; to open/close the central locking	222430▲	7.40	Z3	0.110

Spare Parts

Figure	Description	Art. No.	Listprice €	PS	Weight kg
Contact element					
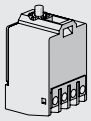	8080/1-3-L 2 NC contact element	132527	21.00	E1	0.026

E2

Dimensional Drawings (All Dimensions in mm [inches]) – Subject to Alterations

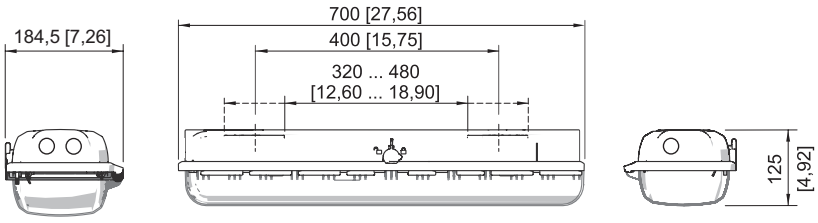

Size 2

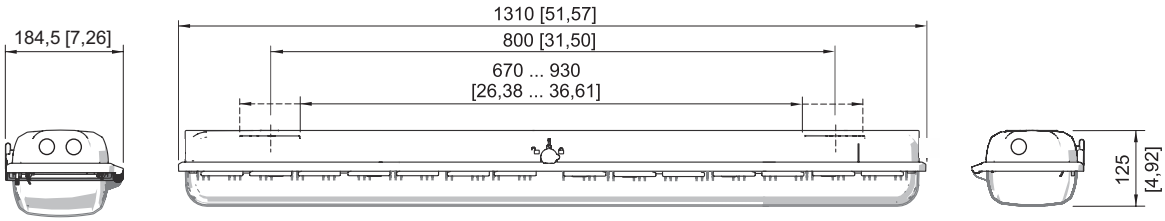

Size 4

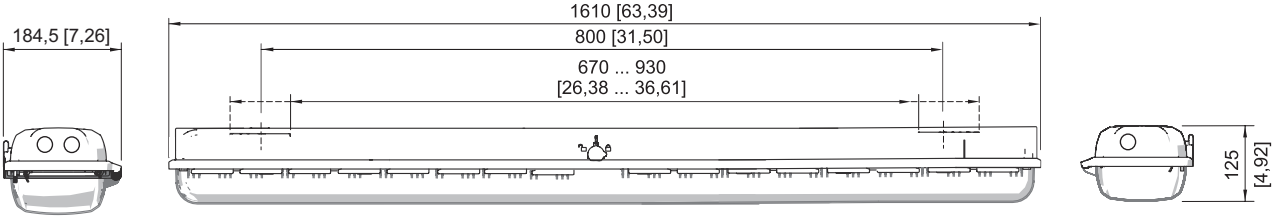

Size 6

▲ Preferred products – in stock or available at short notice

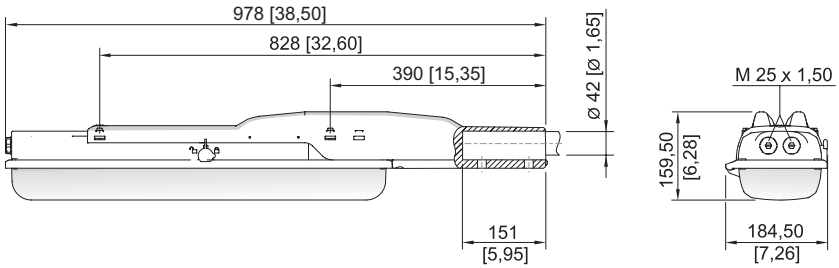

Size 2

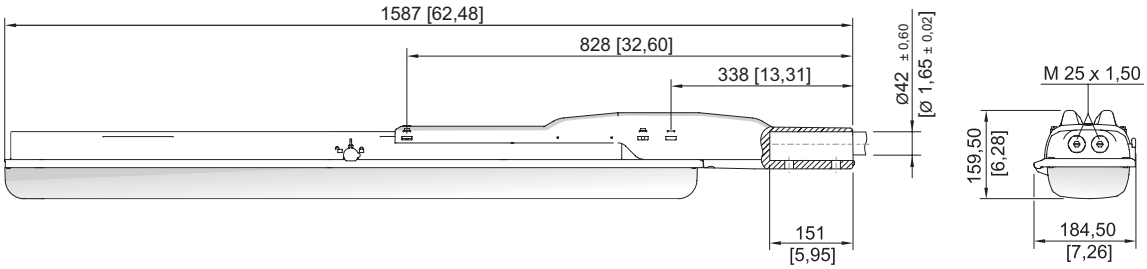

Size 4

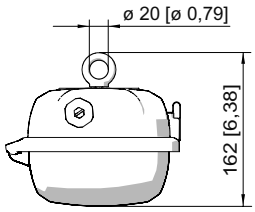

Ring bolt fitted in insert nut of the luminaire

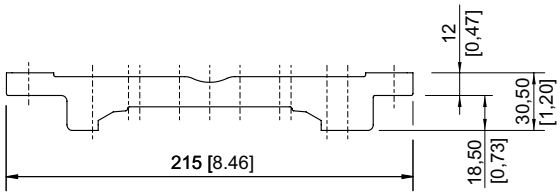

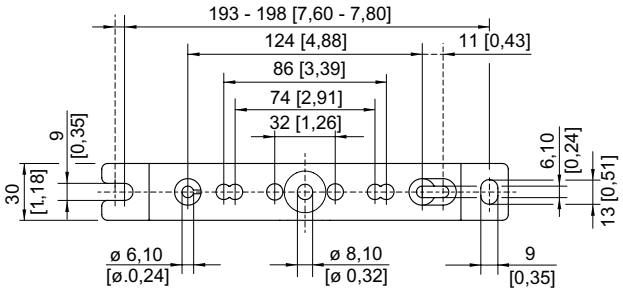

Mounting rail

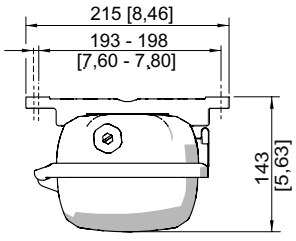

Mounting rail

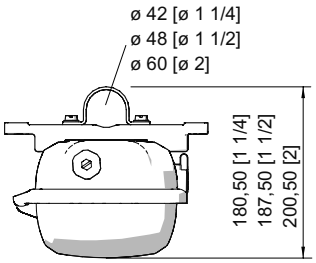

Pipe clamp fitted in mounting rail

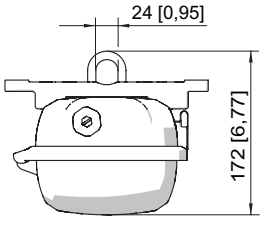

Mounting bracket fitted in mounting rail

E2

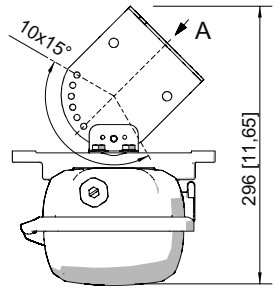

A

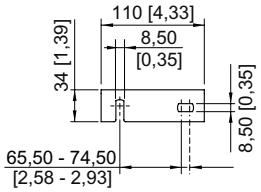

Wall mounting bracket fitted in mounting rail

E2



- State-of-the-art LED technology with high luminous efficacy and long service life
- Extremely high luminaire efficacy
- Luminous flux after 100,000 h still 90% of the starting luminous flux
- Optionally with DALI for controlling and monitoring the luminaire
- Optionally with address modules for directly actuation of a common battery system

WebCode **6402C**

The linear luminaire with Series 6402/4 LED is ideal for lighting surfaces at a mounting height of up to 10 m. It can also be used to illuminate equipment and objects, both inside and outside. The pole mounting sleeve accessory can be used to easily mount the luminaire on poles. Optionally, the luminaire can be equipped with an address module. It can be used to control and monitor the luminaire for the common battery systems.

	IECEx / ATEX					
Zone	0	1	2	20	21	22
Installation in			•		•	•

Selection Table

Design size			2						
Translucent cover			clear						
Light distribution			120°x120° with diffusing glass						
Lamp wattage			22 W						
Luminous flux			2910 lm						
Luminaire efficacy			132 lm/W						
Product variant	Drilled holes	Colour temperature	Threaded plate	Cable entries	Stopping plug	Product Type	Art. No.	Listprice €	PS
standard	3 x M25	5000 K	2x plastic	2 x M25 Ø 7 – 17 mm	2 x M25 x 1.5	6402/4128-6100-152-1110-11-8500	267040▲	455.00	64
	3 x M20	4000 K	2x SS430 stainless steel	Can be ordered as accessories	Can be ordered as accessories	6402/4128-6100-152-2220-22-8400	271815	600.00	64
		5000 K	2x SS430 stainless steel	Can be ordered as accessories	Can be ordered as accessories	6402/4128-6100-152-2220-22-8500	271908	518.00	64
Design size			4						
Translucent cover			clear						
Light distribution			120°x120° with diffusing glass						
Lamp wattage			42 W						
Luminous flux			5810 lm						
Luminaire efficacy			138 lm/W						
Product variant	Drilled holes	Colour temperature	Threaded plate	Cable entries	Stopping plug	Product Type	Art. No.	Listprice €	PS
standard	3 x M25	5000 K	2x plastic	2 x M25 Ø 7 – 17 mm	2 x M25 x 1.5	6402/4148-6100-152-1110-11-8500	267054▲	600.00	64
	3 x M20	4000 K	2x SS430 stainless steel	Can be ordered as accessories	Can be ordered as accessories	6402/4148-6100-152-2220-22-8400	270461	631.00	64
		5000 K	2x SS430 stainless steel	Can be ordered as accessories	Can be ordered as accessories	6402/4148-6100-152-2220-22-8500	267055	631.00	64

Linear Luminaire with LED EXLUX

Series 6402/4

Selection Table

Design size	6
Translucent cover	clear
Light distribution	120°x120° with diffusing glass
Lamp wattage	50 W
Luminous flux	6960 lm
Luminaire efficacy	139 lm/W

Product variant	Drilled holes	Colour temperature	Threaded plate	Cable entries	Stopping plug	Product Type	Art. No.	Listprice €	PS
standard	3 x M25	5000 K	2x plastic	2 x M25 Ø 7 – 17 mm	2 x M25 x 1.5	6402/4168-6200-152-1110-11-8500	276351▲	763.00	64
	3 x M20	4000 K	2x SS430 stainless steel	Can be ordered as accessories	Can be ordered as accessories	6402/4168-6200-152-2220-22-8400	276355	795.00	64
		5000 K	2x SS430 stainless steel	Can be ordered as accessories	Can be ordered as accessories	6402/4168-6200-152-2220-22-8500	276354	774.00	64

Cable entries and stopping plugs made from moulded material are included loose with the product (installation required).
Threaded plate included.

The light fittings are supplied without mounting material.

Technical Data

Variant	Size 2, size 4	Size 6
Explosion Protection		
IECEx gas explosion protection	Ex ec IIC T4 Gc	Ex ec IIC T4 Gc
IECEx dust explosion protection	Ex tb op is / tc IIIC T100 °C Db	Ex tc IIIC T100 °C Dc
ATEX gas explosion protection	Ⓔx II 3 G Ex ec IIC T4 Gc	Ⓔx II 3 G Ex ec IIC T4 Gc
ATEX dust explosion protection	Ⓔx II 2 D Ex tb op is ... tc IIIC T100 °C Db	Ⓔx II 3 D Ex tc IIIC T100 °C Dc
Certificates	ATEX (IBE), IECEx (IBE), India (PESO), Japan (CML)	ATEX (IBE), IECEx (IBE), India (PESO), Japan (CML)
Electrical Data		
Rated operational voltage AC	100 – 240 V	220 – 240 V
Frequency range	50 – 60 Hz	50 – 60 Hz
Rated operational voltage DC	110 – 250 V	200 – 250 V
Ambient Conditions		
Ambient temperature	-40 °C ... +55 °C (T100 °C) Note: Through wiring max. 3x16 A -40 °C ... +60 °C (T100 °C) Note: Through wiring 2 max. 3x10 A	-20 °C ... +55 °C (T100 °C) Note: Through wiring max. 3x16 A -20 °C ... +60 °C (T100 °C) Note: Through wiring 2 max. 3x10 A
Lighting Data		
Number of lamps	1	1
Lamp	LED	LED
Light colour	see selection table	see selection table
Colour rendering	≥ 80	≥ 80
Mechanical Data		
Degree of protection IP (IEC 60598)	IP66/IP67	IP66
Enclosure material	Polyester resin, Glass fibre reinforced	Polyester resin, Glass fibre reinforced
Diffuser	With diffuser	With diffuser
Sealing material	Silicone	Silicone
Connection terminals solid max.	6 mm²	6 mm²
Connection terminals finely-stranded max.	4 mm²	4 mm²
Type of connection cable	Finely stranded Solid	Finely stranded Solid
Impact strength (IEC 62262)	IK10	IK10
Enclosure colour	Light grey (RAL 7035)	Light grey (RAL 7035)
Notes	Connection terminals: Spring clamp terminal (2 free clamping units per pole)	
Components		
Ballast	VG Luxtronic 40 W 300 mA	VG Luxtronic 80 W 350 mA
Through wiring	With 5 conductors 2.5 mm²	With 5 conductors 2.5 mm²

Accessories

Figure	Description	Art. No.	Listprice €	PS	Weight kg
Breather					
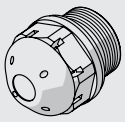	Thread: M25 x 1.5; 1 pc; for installation in lights; in moulded material; without counter nut	138573 ▲	9.90	10	0.010
	Thread: M25 x 1.5; 20 pc; for installation in lights; in moulded material; without counter nut	138576 ▲	186.00	10	0.200
Ceiling and wall mounting bracket					
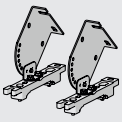	mounted on a mounting rail for a variable mounting distance; Material: stainless steel; Lamp can be swiveled in steps of 15°; 1 pair	222827 ▲	43.00	Z3	1.200
Mounting bracket					
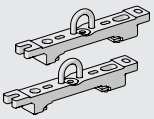	mounting clamp mounted on a mounting rail for a variable mounting distance; 1 pair	222456 ▲	18.00	Z3	0.400
Mounting rail					
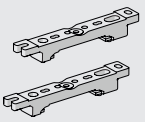	for a variable mounting distance; 1 pair	222826 ▲	13.00	Z3	0.350
Pipe clamp					
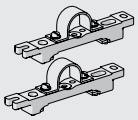	R 1 1/2"; with mounting rail for a variable mounting distance; Material: stainless steel; 1 pair	222459 ▲	17.00	Z3	0.800
	R 1 1/4"; with mounting rail for a variable mounting distance; Material: stainless steel; 1 pair	222458 ▲	17.00	Z3	0.700
	R 2"; with mounting rail for a variable mounting distance; Material: stainless steel; 1 pair	222460 ▲	18.00	Z3	0.750
Pole mounting sleeve					
	for the subsequent mounting on lights size 2 and size 4, completely with assembly parts (for pipe diameter 42 mm)	227512	74.00	Z3	3.200
Ring bolt					
	M8, direct mounting in insert nuts; 1 pair	115736 ▲	11.00	Z3	0.115
Socket key					
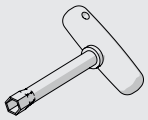	M8 / wrench size 13; to open/close the central locking	222430 ▲	7.40	Z3	0.110

▲ Preferred products – in stock or available at short notice

Linear Luminaire with LED EXLUX
Series 6402/4

Spare Parts

Figure	Description	Art. No.	Listprice €	PS	Weight kg
Contact element					
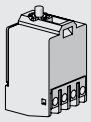	8080/1-3-L 2 NC contact element	132527	21.00	E1	0.026

Dimensional Drawings (All Dimensions in mm [inches]) – Subject to Alterations

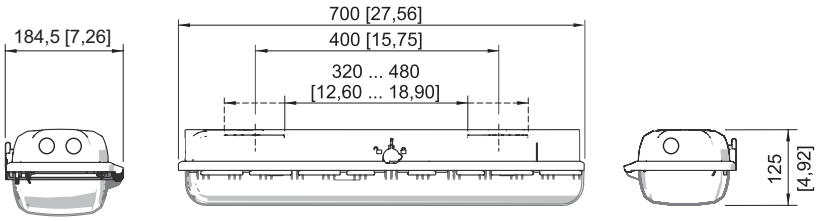

Size 2

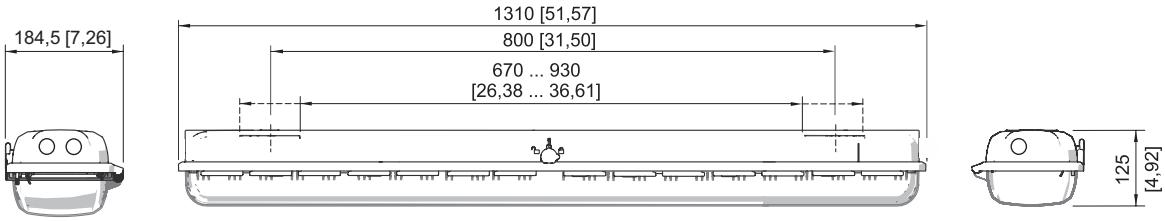

Size 4

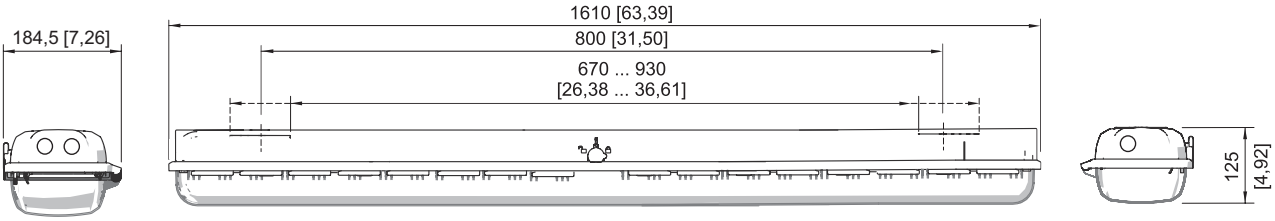

Size 6

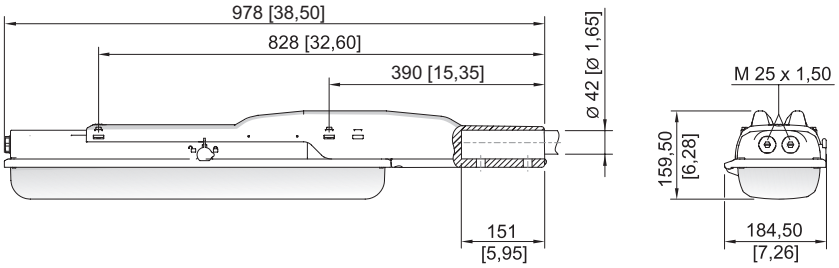

Size 2

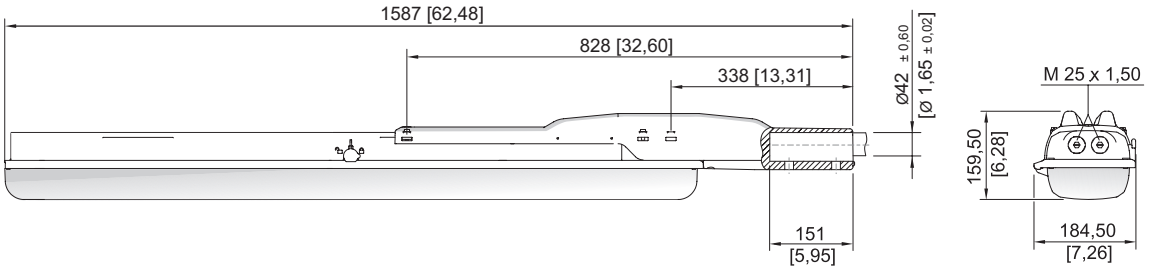

Size 4

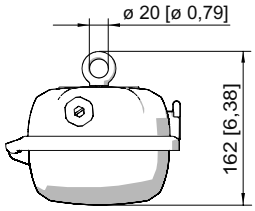

Ring bolt fitted in insert nut of the luminaire

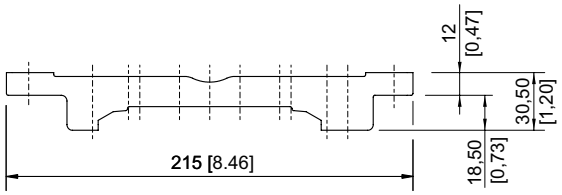

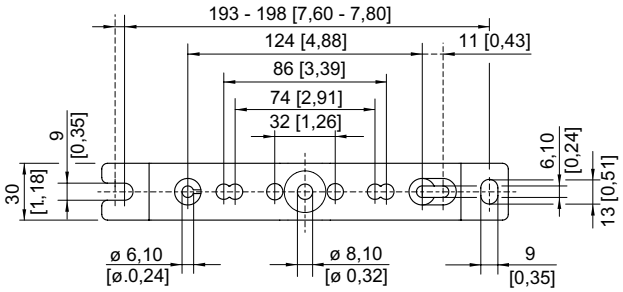

Mounting rail

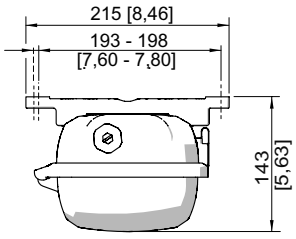

Mounting rail

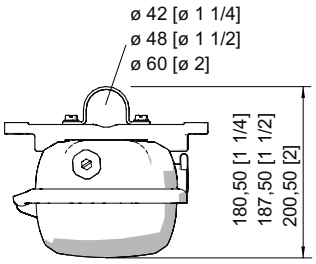

Pipe clamp fitted in mounting rail

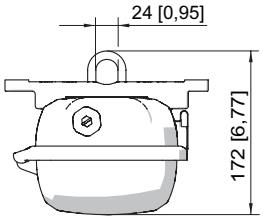

Mounting bracket fitted in mounting rail

E2

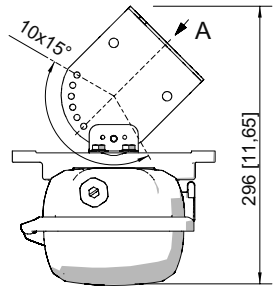

A

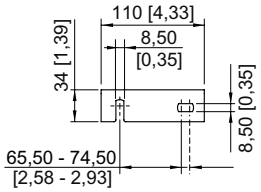

Wall mounting bracket fitted in mounting rail

E2



- Can be used in Zone 1, 2, 21 and 22
- Extremely robust: Impact strength rating of IK10

WebCode 6001A

The 6001 EXLUX luminaire is suited to normal lighting applications in almost any facility. In no time at all and with very little effort, using the accessories it can be fitted to the wall, ceiling or a pole, or alternatively, it can be suspended. The practical central lock has a safety switch that disconnects the power supply at all poles when the plastic enclosure is opened. Lightweight yet strong: The high-quality workmanship makes this luminaire robust and minimises maintenance requirements.

	IECEx / ATEX					
Zone	0	1	2	20	21	22
Installation in		•	•		•	•

Selection Table

Drilled holes	Threaded plate	Cable entries	Stopping plug	Product Type	Art. No.	Listprice €	PS	Weight kg
Design size Lamp wattage		2 18 W						
3 x M20	2x SS430 stainless steel	Can be ordered as accessories	Can be ordered as accessories	6001/522-9510-15-232	238144	646.00	30	4.500
3 x M25	2x plastic	2 x M25 Ø 7 – 17 mm	2 x M25 x 1.5	6001/522-9510-15-131	220897▲	615.00	30	4.500
Design size Lamp wattage		4 36 W						
Drilled holes	Threaded plate	Cable entries	Stopping plug	Product Type	Art. No.	Listprice €	PS	Weight kg
3 x M20	2x SS430 stainless steel	Can be ordered as accessories	Can be ordered as accessories	6001/542-9510-15-232	238145	753.00	30	6.800
3 x M25	2x plastic	2 x M25 Ø 7 – 17 mm	2 x M25 x 1.5	6001/542-9510-15-131	220903▲	667.00	30	6.750
Design size Lamp wattage		6 58 W						
Drilled holes	Threaded plate	Cable entries	Stopping plug	Product Type	Art. No.	Listprice €	PS	Weight kg
3 x M20	2x SS430 stainless steel	Can be ordered as accessories	Can be ordered as accessories	6001/562-9510-15-232	238146	958.00	30	7.900
3 x M25	2x plastic	2 x M25 Ø 7 – 17 mm	2 x M25 x 1.5	6001/562-9510-15-131	220910▲	882.00	30	7.900

Cable entries and stopping plugs made from moulded material are included loose with the product (installation required).
Threaded plate included.

The light fittings are supplied without fluorescent lamps or mounting material. These parts must be ordered as accessories.

Linear Luminaire for Fluorescent Lamps EXLUX
Series 6001

Technical Data		
Variant	**Design size 2 and 4**	**Design size 6**
Explosion Protection		
IECEx gas explosion protection	Ex db eb IIC T4 Gb	Ex db eb IIC T4 Gb
IECEx dust explosion protection	Ex tb IIIC T80 °C Db	Ex tb IIIC T80 °C Db
ATEX gas explosion protection	Ⓔx II 2 G Ex db eb IIC T4 Gb	Ⓔx II 2 G Ex db eb IIC T4 Gb
ATEX dust explosion protection	Ⓔx II 2 D Ex tb IIIC T80 °C Db	Ⓔx II 2 D Ex tb IIIC T80 °C Db
EAC gas explosion protection	1 Ex d e IIC T4 Gb	1 Ex d e IIC T4 Gb
EAC dust explosion protection	Ex tb IIIC T80°C Db	Ex tb IIIC T80°C Db
Certificates	ATEX (PTB), Brazil (ULB), China (CQST), EAC (ENDCE), IECEx (PTB), Polen (CNBOP), Taiwan (ITRI)	ATEX (PTB), Brazil (ULB), China (CQST), EAC (ENDCE), IECEx (PTB), Polen (CNBOP), Taiwan (ITRI)
Ship approval	BVIS, DNV GL	BVIS
Electrical Data		
Rated operational voltage AC	220 – 240 V	220 – 240 V
Rated operational voltage DC	220 – 240 V	220 – 240 V
Frequency range	50 – 60 Hz	50 – 60 Hz
Ambient Conditions		
Ambient temperature	-30 °C ... +50 °C Note: Through wiring max. 3x16 A -30 °C ... +55 °C Note: Through wiring 2 max. 3x10 A	-20 °C ... +50 °C Note: Through wiring max. 3x16 A -20 °C ... +55 °C Note: Through wiring 2 Max. 3x8 A
Lighting Data		
Number of lamps	2	2
Lamp	G13 lamp base	G13 lamp base
Mechanical Data		
Degree of protection IP (IEC 60598)	IP66/IP67	IP66
Protection class	I (with inner PE connection)	I (with inner PE connection)
Enclosure material	Polyester resin, Glass fibre reinforced	Polyester resin, Glass fibre reinforced
Sealing material	Silicone	Silicone
Material translucent cover	Polycarbonate	Polycarbonate
Installed terminal strip	PE + N + L1 + L2 + L3	PE + N + L1 + L2 + L3
Connection terminals solid max.	6 mm²	6 mm²
Lighting lock	Central lock , For box spanner actuation	Central lock , For box spanner actuation
Type of connection cable	Finely stranded Solid	Finely stranded Solid
Impact strength (IEC 62262)	IK10	IK10
Enclosure colour	Light grey (RAL 7035)	Light grey (RAL 7035)
Notes	Connection terminals: Spring clamp terminal (2 free clamping units per pole)	
Components		
Ballast	6042/243-21	6042/963-21
Through wiring	With 5 conductors 2.5 mm²	With 5 conductors 2.5 mm²

Accessories

Figure	Description	Art. No.	Listprice €	PS	Weight kg
Breather					
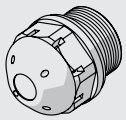	Thread: M25 x 1.5; 1 pc; for installation in lights; in moulded material; without counter nut	138573▲	9.90	10	0.010
	Thread: M25 x 1.5; 20 pc; for installation in lights; in moulded material; without counter nut	138576▲	186.00	10	0.200

Accessories

Figure	Description	Art. No.	Listprice €	PS	Weight kg
Ceiling and wall mounting bracket					
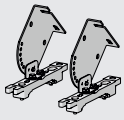	mounted on a mounting rail for a variable mounting distance; Material: stainless steel; Lamp can be swiveled in steps of 15°; 1 pair	222827 ▲	43.00	Z3	1.200
Mounting bracket					
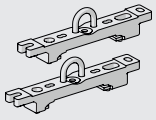	mounting clamp mounted on a mounting rail for a variable mounting distance; 1 pair	222456 ▲	18.00	Z3	0.400
Mounting rail					
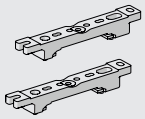	for a variable mounting distance; 1 pair	222826 ▲	13.00	Z3	0.350
Pipe clamp					
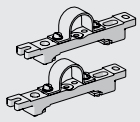	R 1 1/2"; with mounting rail for a variable mounting distance; Material: stainless steel; 1 pair	222459 ▲	17.00	Z3	0.800
	R 1 1/4"; with mounting rail for a variable mounting distance; Material: stainless steel; 1 pair	222458 ▲	17.00	Z3	0.700
	R 2"; with mounting rail for a variable mounting distance; Material: stainless steel; 1 pair	222460 ▲	18.00	Z3	0.750
Pole mounting sleeve					
	for the subsequent mounting on lights size 2 and size 4, completely with assembly parts (for pipe diameter 42 mm)	227512	74.00	Z3	3.200
Ring bolt					
	M8, direct mounting in insert nuts; 1 pair	115736 ▲	11.00	Z3	0.115
Socket key					
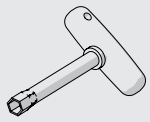	M8 / wrench size 13; to open/close the central locking	222430 ▲	7.40	Z3	0.110

Spare Parts

Figure	Description	Art. No.	Listprice €	PS	Weight kg
Contact element					
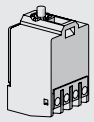	8080/1-3-L 2 NC contact element	132527	21.00	E1	0.026

▲ Preferred products – in stock or available at short notice

Linear Luminaire for Fluorescent Lamps EXLUX
Series 6001

Dimensional Drawings (All Dimensions in mm [inches]) – Subject to Alterations

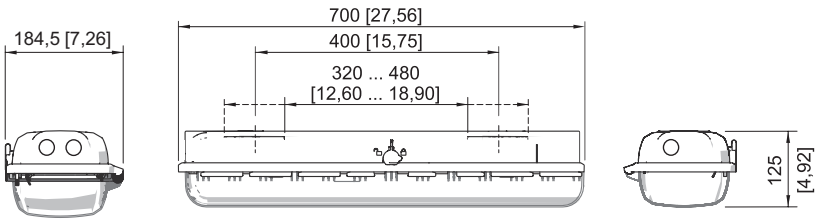

Size 2

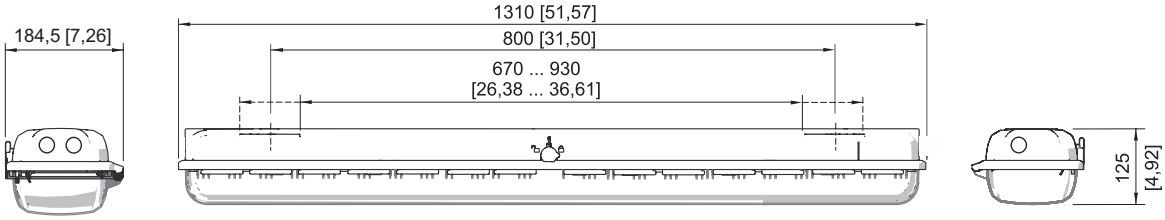

Size 4

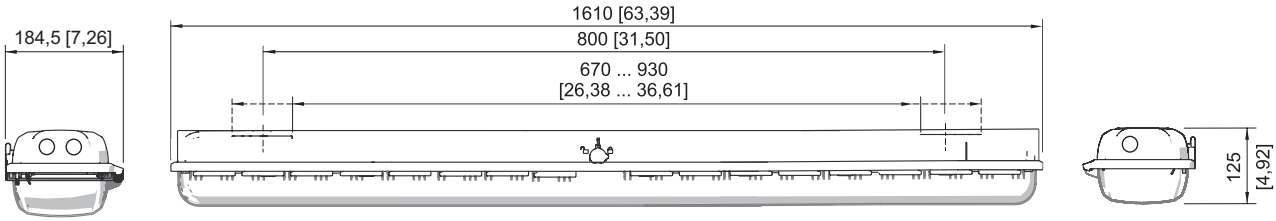

Size 6

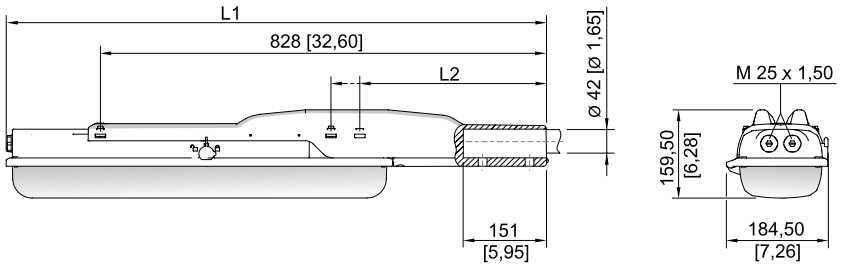

With pole mounting sleeve
Size 2:
L1 = 978 mm [38.50]
L2 = 390 mm [15.35]

Size 4:
L1 = 1587 mm [62.48]
L2 = 338 mm [13.31]

E2

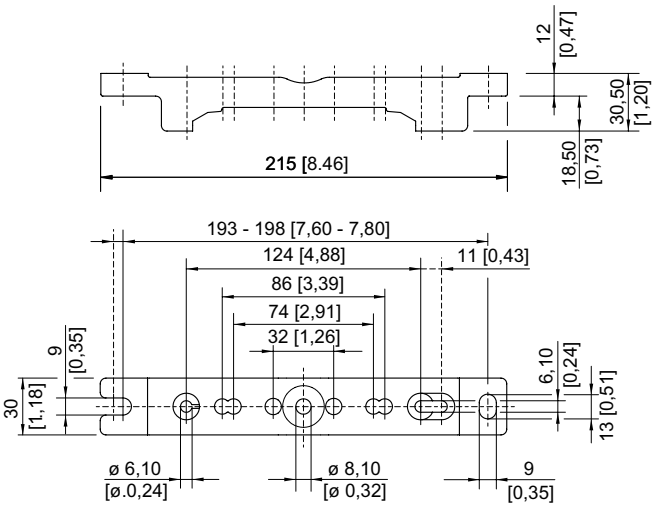

Mounting rail

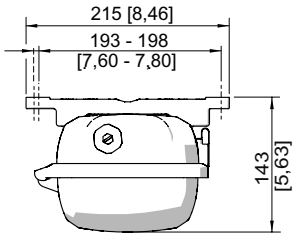

Mounting rail

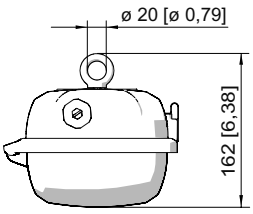

Ring bolt fitted in insert nut of the luminaire

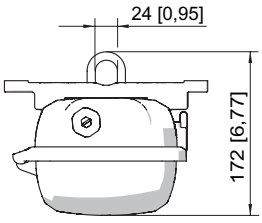

Mounting bracket fitted in mounting rail

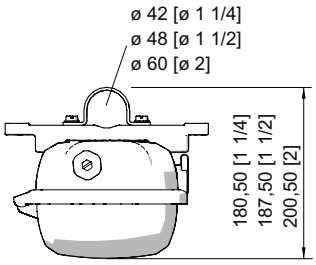

Pipe clamp fitted in mounting rail

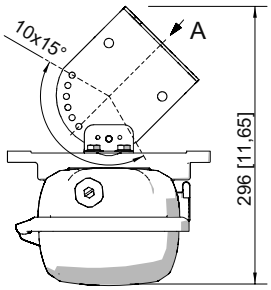

A

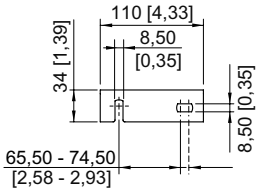

Wall mounting bracket fitted in mounting rail

E2

Linear Luminaire for Fluorescent Lamps EXLUX

Series 6401



- Can be used in Zone 2, 21 and 22
- Explosion-protected linear luminaire with two fluorescent lamps: 18 W, 36 W and 58 W
- Extremely robust: Impact strength rating of IK10

WebCode **6401A**

The 6401 EXLUX luminaire is suited to normal indoor and outdoor lighting applications. In no time at all and with very little effort, using the accessories it can be fitted to the wall, ceiling or a pole, or alternatively, it can be suspended. The practical central lock is available with an optional switching element that disconnects the power supply at all poles when the plastic enclosure is opened. Lightweight yet strong: The high-quality workmanship makes this luminaire robust and minimises maintenance requirements.

	IECEx / ATEX					
Zone	0	1	2	20	21	22
Installation in			•		•	•

E2

Selection Table

Drilled holes	Threaded plate	Cable entries	Stopping plug	Product Type	Art. No.	Listprice €	PS	Weight kg
Design size / Lamp wattage		2 / 18 W						
3 x M20	2x SS430 stainless steel	Can be ordered as accessories	Can be ordered as accessories	6401/522-8508-15-232	239555	441.00	30	3.200
3 x M25	2x plastic	2 x M25 Ø 7 – 17 mm	2 x M25 x 1.5	6401/522-8508-15-131	239552	420.00	30	3.200
Design size / Lamp wattage		4 / 36 W						
Drilled holes	Threaded plate	Cable entries	Stopping plug	Product Type	Art. No.	Listprice €	PS	Weight kg
3 x M20	2x SS430 stainless steel	Can be ordered as accessories	Can be ordered as accessories	6401/542-8508-15-232	239556	528.00	30	5.500
3 x M25	2x plastic	2 x M25 Ø 7 – 17 mm	2 x M25 x 1.5	6401/542-8508-15-131	239553▲	495.00	30	5.500
Design size / Lamp wattage		6 / 58 W						
Drilled holes	Threaded plate	Cable entries	Stopping plug	Product Type	Art. No.	Listprice €	PS	Weight kg
3 x M20	2x SS430 stainless steel	Can be ordered as accessories	Can be ordered as accessories	6401/562-8508-15-232	239557	592.00	30	7.900
3 x M25	2x plastic	2 x M25 Ø 7 – 17 mm	2 x M25 x 1.5	6401/562-8508-15-131	239554	570.00	30	7.900

Cable entries and stopping plugs made from moulded material are included loose with the product (installation required).
Threaded plate included.

The light fittings are supplied without fluorescent lamps or mounting material. These parts must be ordered as accessories.

Technical Data

Variant	Design size 2 and 4	Design size 6
Explosion Protection		
IECEx gas explosion protection	Ex ec IIC T4 Gc	Ex ec IIC T4 Gc
IECEx dust explosion protection	Ex tb / tc IIIC T80 °C Db	Ex tb / tc IIIC T80 °C Db
ATEX gas explosion protection	Ⓔx II 3 G Ex ec IIC T4 Gc	Ⓔx II 3 G Ex ec IIC T4 Gc
ATEX dust explosion protection	Ⓔx II 2 D Ex tb ... tc IIIC T80 °C Db	Ⓔx II 2 D Ex tb ... tc IIIC T80 °C Db
Certificates	ATEX (PTB), IECEx (PTB)	ATEX (PTB), IECEx (PTB)
Ship approval	DNV GL	
Electrical Data		
Rated operational voltage AC	220 – 240 V	220 – 240 V
Rated operational voltage DC	220 – 240 V	220 – 240 V
Frequency range	50 – 60 Hz	50 – 60 Hz
Ambient Conditions		
Ambient temperature	-30 °C ... +50 °C (T80 °C) Note: Through wiring max. 3x16 A (T80 °C)	-20 °C ... +50 °C (T80 °C) Note: Through wiring max. 3x16 A (T80 °C)
Lighting Data		
Number of lamps	2	2
Lamp	G13 lamp base	G13 lamp base
Mechanical Data		
Degree of protection IP (IEC 60598)	IP66/IP67	IP66
Protection class	I (with inner PE connection)	I (with inner PE connection)
Enclosure material	Polyester resin, Glass fibre reinforced	Polyester resin, Glass fibre reinforced
Material translucent cover	Polycarbonate	Polycarbonate
Installed terminal strip	PE + N + L1 + L2 + L3	PE + N + L1 + L2 + L3
Connection terminals solid max.	6 mm²	6 mm²
Impact strength (IEC 62262)	IK10	IK10
Enclosure colour	Light grey (RAL 7035)	Light grey (RAL 7035)
Notes	Connection terminals: Spring clamp terminal (2 free clamping units per pole)	
Components		
Through wiring	With 5 conductors 2.5 mm²	With 5 conductors 2.5 mm²

Accessories

Figure	Description	Art. No.	Listprice €	PS	Weight kg
Breather					
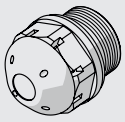	Thread: M25 x 1.5; 1 pc; for installation in lights; in moulded material; without counter nut	138573▲	9.90	10	0.010
	Thread: M25 x 1.5; 20 pc; for installation in lights; in moulded material; without counter nut	138576▲	186.00	10	0.200
Ceiling and wall mounting bracket					
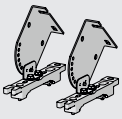	mounted on a mounting rail for a variable mounting distance; Material: stainless steel; Lamp can be swiveled in steps of 15°; 1 pair	222827▲	43.00	Z3	1.200
Mounting bracket					
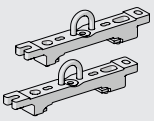	mounting clamp mounted on a mounting rail for a variable mounting distance; 1 pair	222456▲	18.00	Z3	0.400

▲ Preferred products – in stock or available at short notice

Linear Luminaire for Fluorescent Lamps EXLUX
Series 6401

Accessories

Figure	Description	Art. No.	Listprice €	PS	Weight kg
Mounting rail					
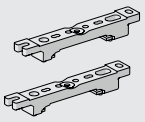	for a variable mounting distance; 1 pair	222826▲	13.00	Z3	0.350
Pipe clamp					
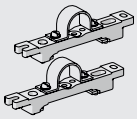	R 1 1/2"; with mounting rail for a variable mounting distance; Material: stainless steel; 1 pair	222459▲	17.00	Z3	0.800
	R 1 1/4"; with mounting rail for a variable mounting distance; Material: stainless steel; 1 pair	222458▲	17.00	Z3	0.700
	R 2"; with mounting rail for a variable mounting distance; Material: stainless steel; 1 pair	222460▲	18.00	Z3	0.750
Pole mounting sleeve					
	for the subsequent mounting on lights size 2 and size 4, completely with assembly parts (for pipe diameter 42 mm)	227512	74.00	Z3	3.200
Ring bolt					
	M8, direct mounting in insert nuts; 1 pair	115736▲	11.00	Z3	0.115
Socket key					
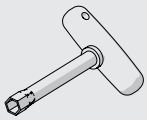	M8 / wrench size 13; to open/close the central locking	222430▲	7.40	Z3	0.110

E2

Spare Parts

Figure	Description	Art. No.	Listprice €	PS	Weight kg
Contact element					
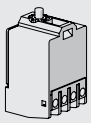	8080/1-3-L 2 NC contact element	132527	21.00	E1	0.026

Dimensional Drawings (All Dimensions in mm [inches]) – Subject to Alterations

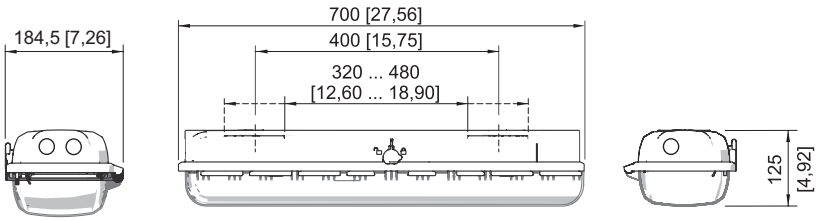

Size 2

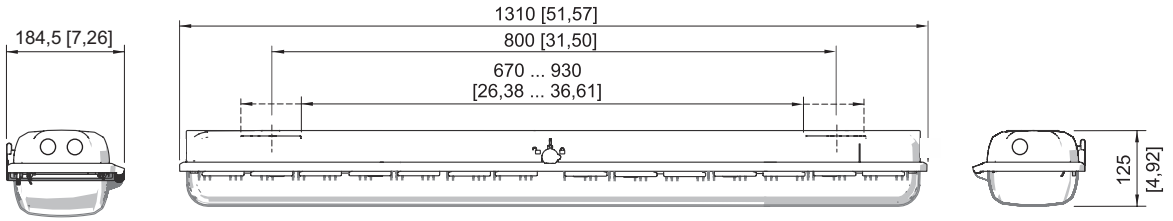

Size 4

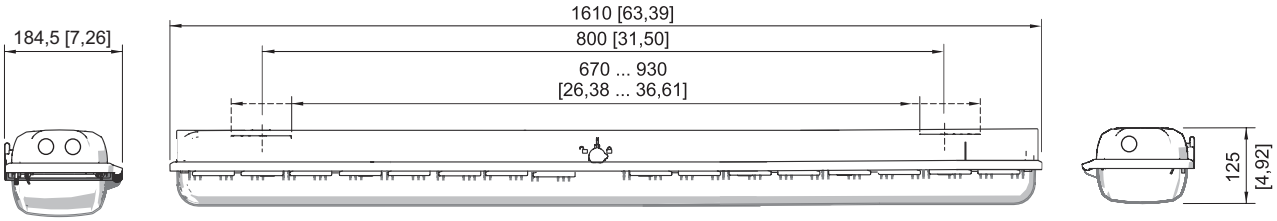

Size 6

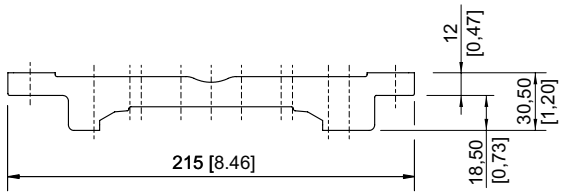

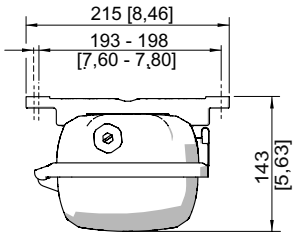

Mounting rail

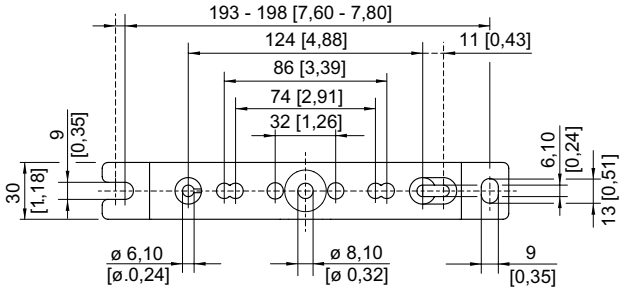

Mounting rail

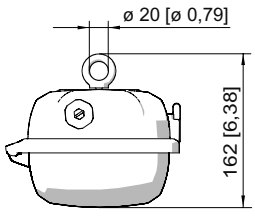

Ring bolt fitted in insert nut of the luminaire

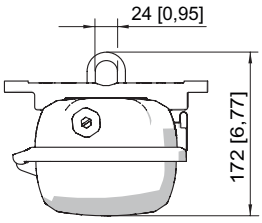

Mounting bracket fitted in mounting rail

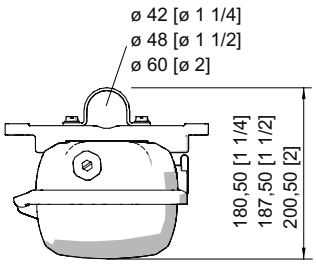

Pipe clamp fitted in mounting rail

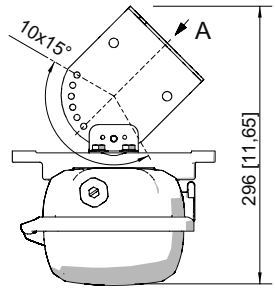

A

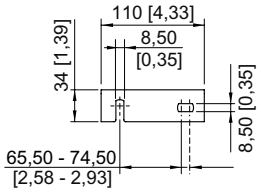

Wall mounting bracket fitted in mounting rail

E2



- Suitable for wall, ceiling and suspended mounting
- Available with DALI or ILS technology
- Emergency exit signs with suspended panel so that they can be read from both sides
- Large recognition distance d ≥ 30 m
- Lightweight, robust and compact design

WebCode 6102A

C-LUX 6102 series compact light fittings can be used for normal lighting or as emergency luminaires in conjunction with escape route signs and/or with ILS for programmable use in central battery systems.

	IECEx / ATEX					
Zone	0	1	2	20	21	22
Installation in		•	•		•	•

E2

Selection Table

Lamp: LED

Figure	Version	Colour temperature	Luminous flux	Control interface	Product Type	Art. No.	Listprice €	PS	Weight kg
	escape downstairs, single-sided	–	–	without	6102/111-0100-150-0111-11-1850-D1	273110▲	388.00	64	3.570
	Escape route upstairs single-sided	–	–	without	6102/111-0100-150-0111-11-1850-C1	273109▲	388.00	64	3.570
	escape to the left, single-sided	–	–	without	6102/111-0100-150-0111-11-1850-B1	273108▲	388.00	64	3.570
	escape to the left/ right, double-sided	–	–	without	6102/111-0100-150-0111-11-1850-A2	273121▲	388.00	64	3.570
	escape to the right, single-sided	–	–	without	6102/111-0100-150-0111-11-1850-A1	273107▲	388.00	64	3.570
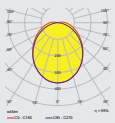	with diffuser 2 x 40°	5000 K	600 lm	without	6102/111-0100-150-0111-11-4850-00	270457▲	316.00	64	3.000

▲ Preferred products – in stock or available at short notice

C-LUX Compact Light Fittings
Series 6102

Technical Data	
Explosion Protection	
IECEx gas explosion protection	Ex db eb ib op is IIC T4 Gb
IECEx dust explosion protection	Ex tb op is IIIC T100 °C Db
ATEX gas explosion protection	Ⓔx II 2 G Ex db eb ib op is IIC T4 Gb
ATEX dust explosion protection	Ⓔx II 2 D Ex tb op is IIIC T100 °C Db
Certificates	ATEX (IBE), Brazil (ULB), China (NEPSI), IECEx (IBE)
Electrical Data	
Frequency range	50 – 60 Hz
Operating voltage AC	100...240 V ± 10%
Operating voltage DC	100...250 V ± 10%
Ambient Conditions	
Ambient temperature	-40 °C ... +50 °C Note: Through wiring max. 3x16 A -40 °C ... +60 °C Note: Through wiring 2 max. 3x10 A
Mechanical Data	
Degree of protection IP (IEC 60598)	IP66 / IP67
Silicon free	w/o Influence on paint wetting
Protection class	I
Enclosure material	Thermoset
Cover material	polycarbonate
Sealing material	Silicone
Installed terminal strip	PE + N + L1 + L2 + L3
Connection terminals solid max.	6 mm²
Connection terminals finely-stranded max.	4 mm²
Type of connection cable	Solid Finely stranded
Impact strength (IEC 62262)	IK08
Enclosure colour	Light grey (RAL 7035)
Disconnection of the luminaire	No
Components	
Threaded plate	2x plastic
Ballast	6045/311-840-10 AC/DC Standard
Through wiring	Loop in/loop out wiring
Drilled holes	3 x M25
Cable entries	2 x M25 Ø 7 – 17 mm
Stopping plug	2 x M25 x 1.5
Stopping plug material	Polyamide, black
Accessories	Provided

E2

Accessories

Figure	Description	Art. No.	Listprice €	PS	Weight kg
Fastening set					
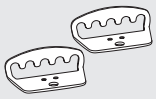	for chain/rope assembly	275407	48.00	Z3	0.100
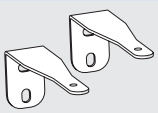	for wall mounting	275408	27.00	Z3	0.400

Spare Parts

Figure	Description	Art. No.	Listprice €	PS	Weight kg
Light Panel					
	Escape route, down	274776	95.00	E3	0.625
	Escape route, up	274758	95.00	E3	0.625
	Escape route, down double-sided	274780	95.00	E3	0.625
	Escape route, up double-sided	274772	95.00	E3	0.625
	Escape route, left	274757	95.00	E3	0.625
	Escape route, right	274775	95.00	E3	0.625
	Escape route left/right double-sided	274773	95.00	E3	0.625
Optic					
	Diffuser	274756	27.00	E3	0.025

Dimensional Drawings (All Dimensions in mm [inches]) – Subject to Alterations

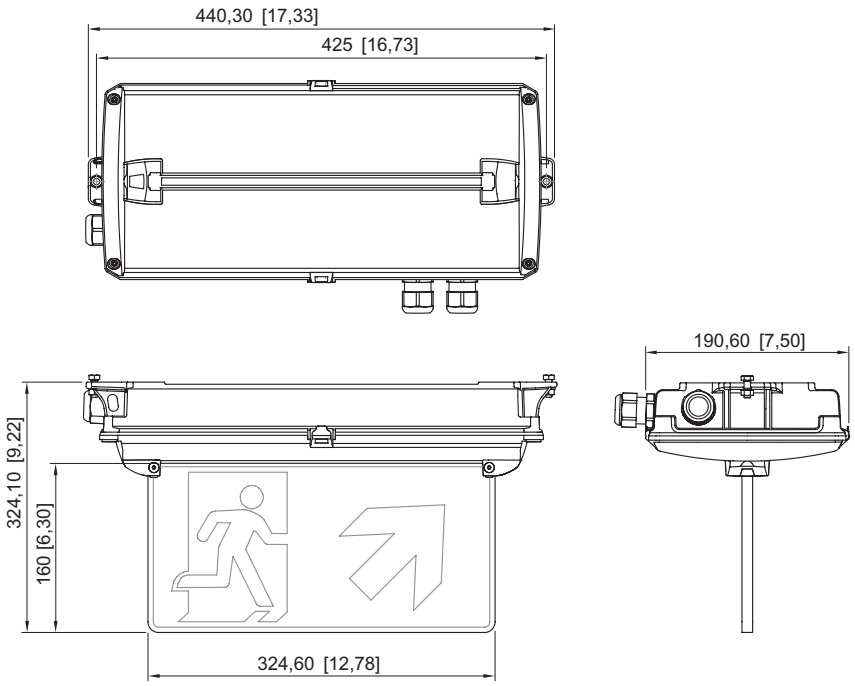

with escape sign

E2

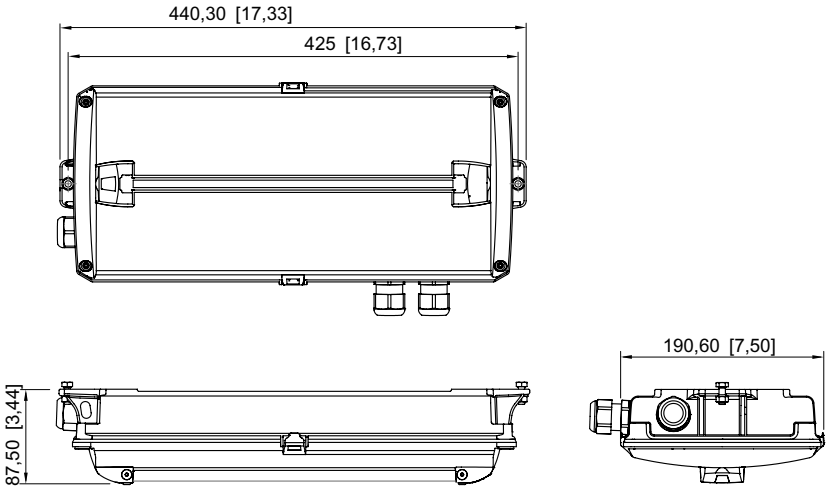

without escape sign

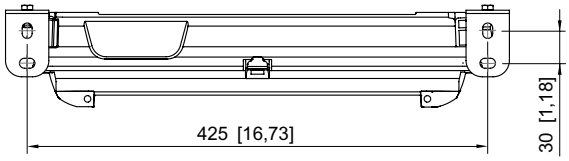

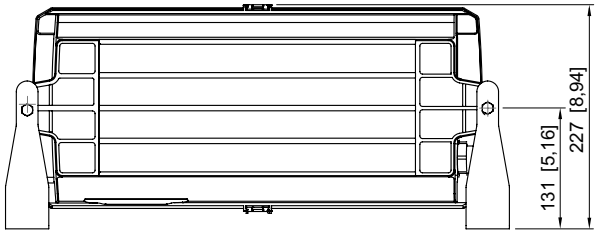

with mounting brackets

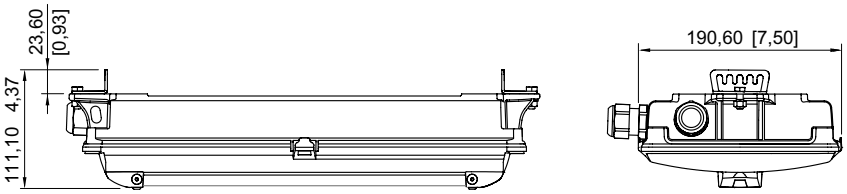

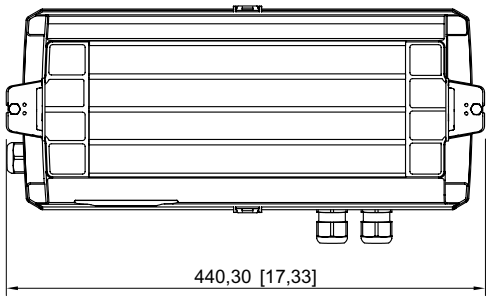

for rope/chain mounting

E2

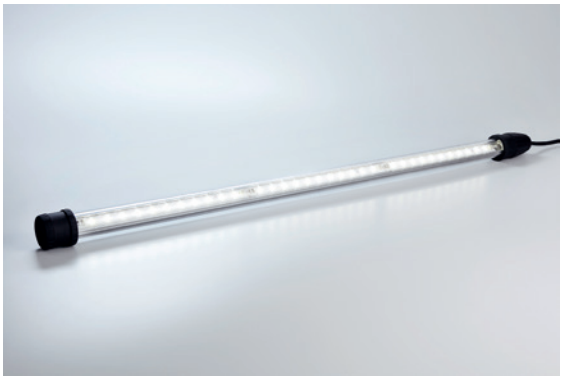

- Degree of protection IP66 and IP68
- Type of protection Ex d
- Vibration-resistant, lightweight, robust (impact strength rating of IK10) and maintenance-free
- Many light fittings can be connected to single miniature circuit breaker due to incredibly low start-up current

WebCode **6036A**

The 6036 series compact LED tubular light fitting is ideal for general lighting applications and for use as machine lighting, even in relatively inaccessible places with very little space. This light boasts a long service life of up to 100,000 hours thanks to its use of energy-efficient LED technology, coupled with electronics that have been developed in-house by R. STAHL. Due to its robust construction, it can withstand extreme temperatures of between -55 °C and +60 °C.

	IECEx / ATEX					
Zone	0	1	2	20	21	22
Installation in		•	•		•	•

Selection Table

Design size 1
Cable length 5 m
Rated operational voltage AC 24 – 48 V
Rated operational voltage DC 24 – 48 V
Gas temperature class T4
Dust maximum surface temperature 100 °C
Ambient temperature -40 °C ... +70 °C

Light colour	Diffuser	Luminaire efficacy	Luminous flux	Product Type	Art. No.	Listprice €	PS	Weight kg
Neutral white	With diffuser	104 lm/W	1396 lm	6036/1212-453-0151-11	274309▲	442.00	64	1.310

Design size 1
Cable length 5 m
Rated operational voltage AC 110 – 240 V
Rated operational voltage DC 110 – 240 V
Gas temperature class T4
Dust maximum surface temperature 100 °C
Ambient temperature -30 °C ... +70 °C

Light colour	Diffuser	Luminaire efficacy	Luminous flux	Product Type	Art. No.	Listprice €	PS	Weight kg
Neutral white	With diffuser	104 lm/W	1396 lm	6036/1212-455-0151-11	274310▲	402.00	64	1.310

Design size 2
Cable length 5 m
Rated operational voltage AC 220 – 240 V
Rated operational voltage DC 209 – 240 V
Gas temperature class T4
Dust maximum surface temperature 100 °C
Ambient temperature -50 °C ... +60 °C (Energise above -40 °C)

Light colour	Diffuser	Luminaire efficacy	Luminous flux	Product Type	Art. No.	Listprice €	PS	Weight kg
Neutral white	With diffuser	112 lm/W	2847 lm	6036/1225-450-0151-11	274207▲	482.00	64	1.730

▲ Preferred products – in stock or available at short notice
09-Nov-2020· KP·en

Tubular Light Fitting with LED
Series 6036

Selection Table

Design size	3
Cable length	5 m
Rated operational voltage AC	220 – 240 V
Rated operational voltage DC	209 – 240 V
Gas temperature class	T4
Dust maximum surface temperature	100 °C
Ambient temperature	-55 °C ... +60 °C (Energise above -40 °C)

Light colour	Diffuser	Luminaire efficacy	Luminous flux	Product Type	Art. No.	Listprice €	PS	Weight kg
Neutral white	With diffuser	116 lm/W	4266 lm	6036/1235-450-0151-11	274227▲	562.00	64	2.090

Design size	4
Cable length	5 m
Rated operational voltage AC	220 – 240 V
Rated operational voltage DC	209 – 240 V
Gas temperature class	T4
Dust maximum surface temperature	100 °C
Ambient temperature	-55 °C ... +60 °C (Energise above -40 °C)

Light colour	Diffuser	Luminaire efficacy	Luminous flux	Product Type	Art. No.	Listprice €	PS	Weight kg
Neutral white	With diffuser	116 lm/W	5575 lm	6036/1248-450-0151-11	274247▲	642.00	64	2.440

Technical Data

Variant	Design size 1	Design size 2	Design size 3	Design size 4
Explosion Protection				
IECEx gas explosion protection	Ex db op is IIC T.. Gb	Ex db op is IIC T.. Gb	Ex db op is IIC T.. Gb	Ex db op is IIC T.. Gb
IECEx dust explosion protection	Ex tb IIIC T.. Db	Ex tb IIIC T.. Db	Ex tb IIIC T.. Db	Ex tb IIIC T.. Db
ATEX gas explosion protection	Ⓔx II 2 G Ex db op is IIC T.. Gb	Ⓔx II 2 G Ex db op is IIC T.. Gb	Ⓔx II 2 G Ex db op is IIC T.. Gb	Ⓔx II 2 G Ex db op is IIC T.. Gb
ATEX dust explosion protection	Ⓔx II 2 D Ex tb IIIC T.. Db	Ⓔx II 2 D Ex tb IIIC T.. Db	Ⓔx II 2 D Ex tb IIIC T.. Db	Ⓔx II 2 D Ex tb IIIC T.. Db
Certificates	ATEX (BVIS), Brazil (ULB), China (NEPSI), EAC (ENDCE), IECEx (BVIS), India (PESO)	ATEX (BVIS), Brazil (ULB), China (NEPSI), EAC (ENDCE), IECEx (BVIS), India (PESO)	ATEX (BVIS), Brazil (ULB), China (NEPSI), EAC (ENDCE), IECEx (BVIS), India (PESO)	ATEX (BVIS), Brazil (ULB), China (NEPSI), EAC (ENDCE), IECEx (BVIS), India (PESO)
Ship approval		DNVGL	DNVGL	DNVGL
Notes	For temperature classes and surface temperatures, see selection table			
Electrical Data				
Frequency range	50 – 60 Hz	50 – 60 Hz	50 – 60 Hz	50 – 60 Hz
Ambient Conditions				
Storage temperature	-40 °C ... +70 °C	-40 °C ... +70 °C	-40 °C ... +70 °C	-40 °C ... +70 °C
Lighting Data				
Lamp wattage	13 W	25 W	37 W	48 W
Colour rendering	≥ 80	≥ 80	≥ 80	≥ 80
Note	Values apply to T_a = +25 °C	Values apply to T_a = +25 °C	Values apply to T_a = +25 °C	Values apply to T_a = +25 °C
Colour temperature	5000 K	5000 K	5000 K	5000 K
Notes	warm white: 4000 K neutral white: 5000 K cold white: 6500 K			
Mechanical Data				
Degree of protection (IP)	IP66 / IP67	IP66 / IP67	IP66 / IP67	IP66 / IP67
Degree of protection IP (IEC 60598)	IP66 / IP68 (10 m / 60 min)	IP66 / IP68 (10 m / 60 min)	IP66 / IP68 (10 m / 60 min)	IP66 / IP68 (10 m / 60 min)
Protection class	II (double insulated)	II (double insulated)	II (double insulated)	II (double insulated)
Enclosure material	Polycarbonate	Polycarbonate	Polycarbonate	Polycarbonate
Pipe material	Polycarbonate	Polycarbonate	Polycarbonate	Polycarbonate
Impact strength (IEC 62262)	IK10	IK10	IK10	IK10
Notes	Standard cable: H07RN8-F Additional cable types available: BFOU P5-P12, Radox MFH-S B, (N)SSHÖU, HXSLHXÖ-J			

Accessories

Figure	Description	Art. No.	Listprice €	PS	Weight kg
Plug					
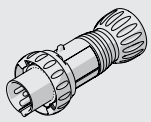	8573/12-200 2 pins, 20 ... 25 V, 50 / 60 Hz, 16 A	243197▲	93.60	10	0.300
	8573/12-210 2 pins, 20 ... 25 V, DC, 16 A	243203▲	93.60	10	0.300
	8573/12-300 3 pins, 20 ... 25 V, 50 / 60 Hz, 16 A	243190▲	98.00	10	0.300
	8573/12-312 3 pins, 40 ... 50 V, 50 / 60 Hz, 16 A	243195	98.00	10	0.300
Mounting bracket					
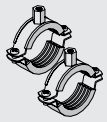	Mounting bracket made of galvanised sheet steel to screw onto thread M8 or M10 (2 pieces)	227256	11.00	Z3	0.190
	Mounting bracket made of stainless steel V4A to screw onto thread M8 or M10 (2 pieces)	227257	23.00	Z3	0.180
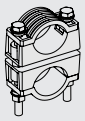	Double mounting bracket made of plastic for mounting of pipes with a diameter of 45 ... 55 mm (Screws and nuts made of stainless steel V2A) (2 pieces)	254932	64.00	Z3	0.800
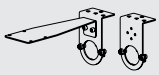	Set of mounting plate Art. no. 254494 and mounting bracket Art. no. 252940	248100	71.00	Z3	0.850
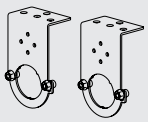	Mounting bracket made of stainless steel V4A for fastening on surfaces (2 pieces)	252940	74.00	Z3	0.600

E2

Dimensional Drawings (All Dimensions in mm [inches]) – Subject to Alterations

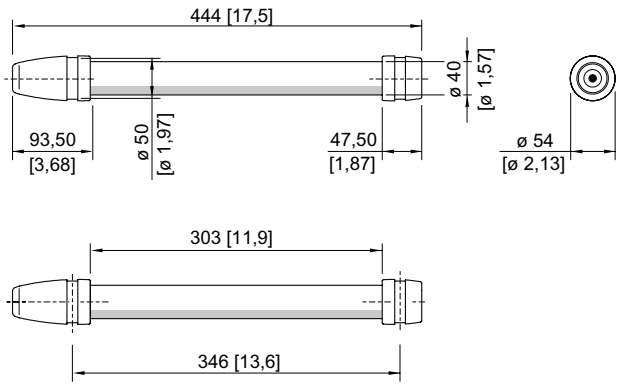

Design size 1

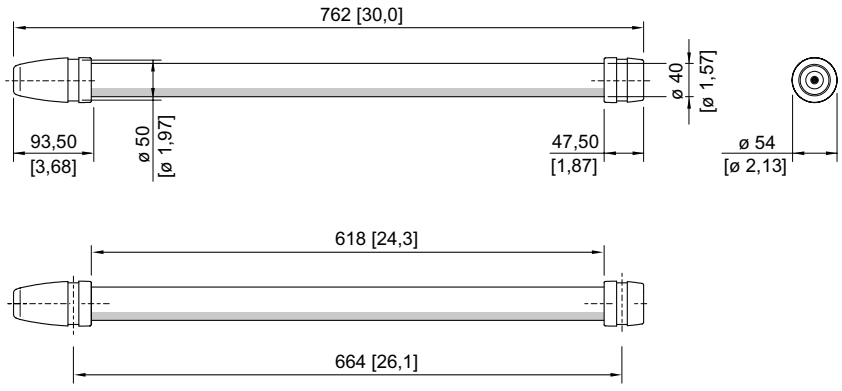

Design size 2

▲ Preferred products – in stock or available at short notice

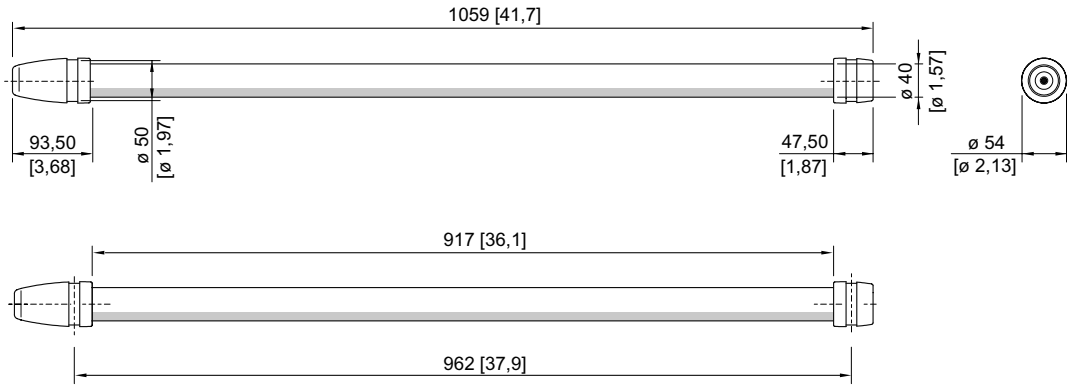

Design size 3

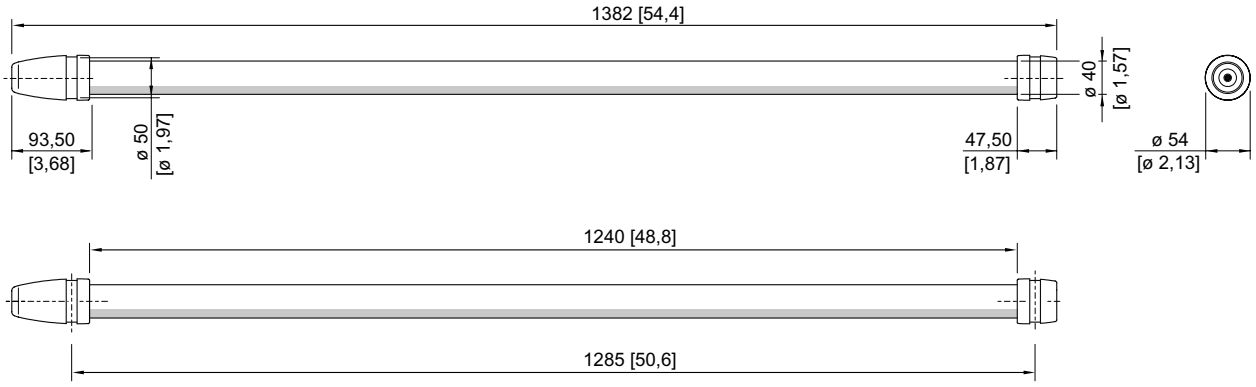

Design size 4

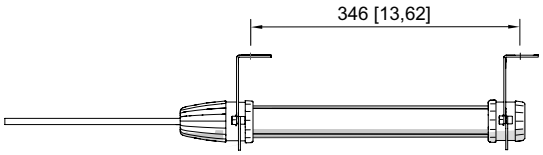

Luminaire with mounting bracket for a surface

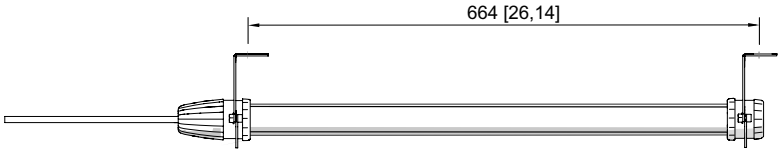

Luminaire with mounting bracket for a surface

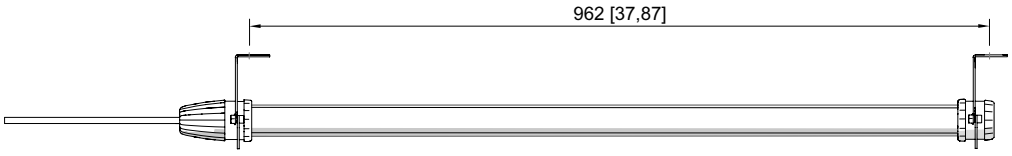

Luminaire with mounting bracket for a surface

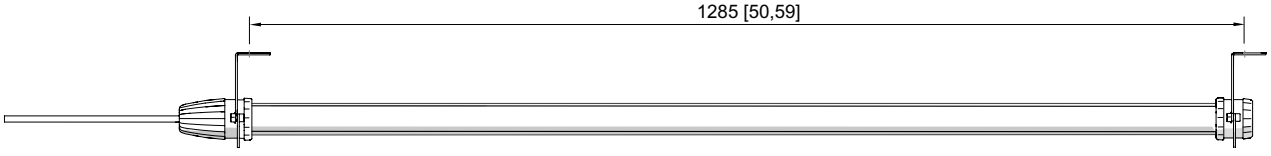

Luminaire with mounting bracket for a surface

E2

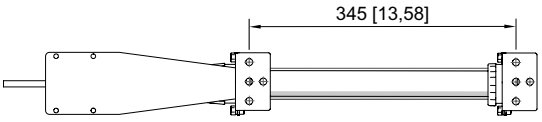

Luminaire with mounting bracket for a surface and mounting plate

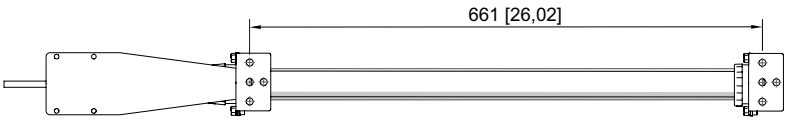

Luminaire with mounting bracket for a surface and mounting plate

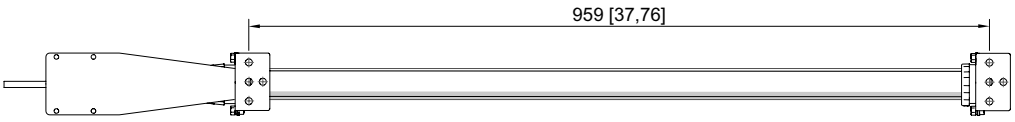

Luminaire with mounting bracket for a surface and mounting plate

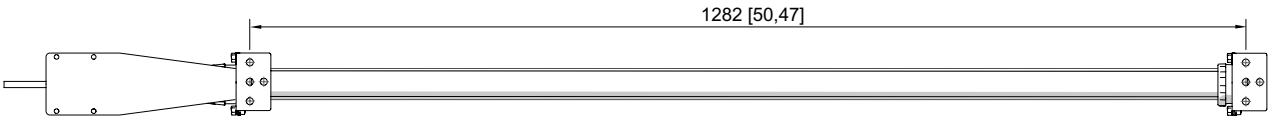

Luminaire with mounting bracket for a surface and mounting plate

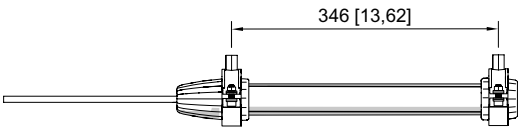

Luminaire with mounting bracket for a thread

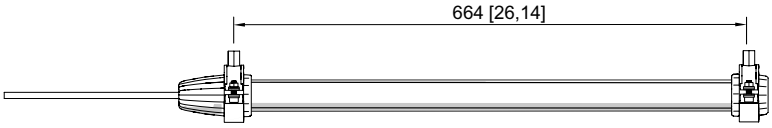

Luminaire with mounting bracket for a thread

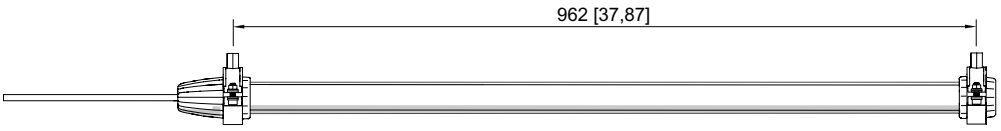

Luminaire with mounting bracket for a thread

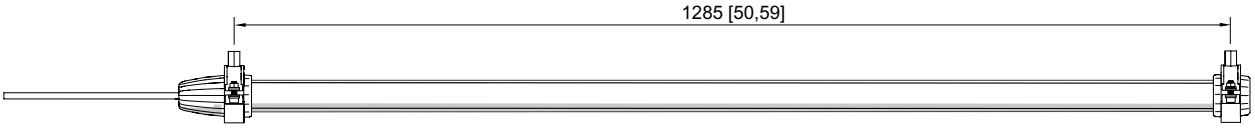

Luminaire with mounting bracket for a thread

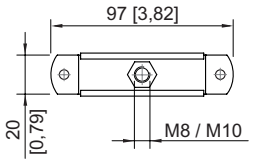

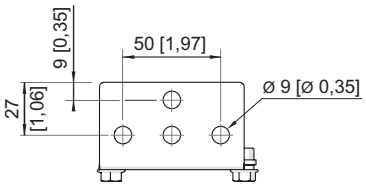

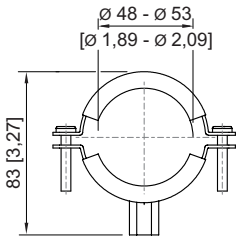

Mounting bracket for a thread

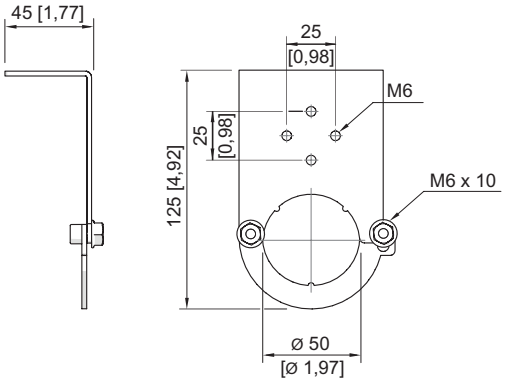

Mounting bracket for surfaces

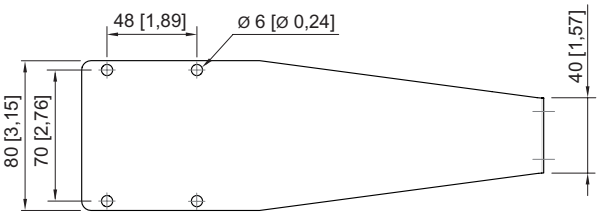

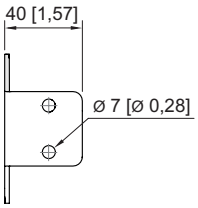

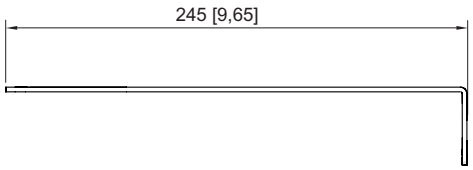

Mounting plate

E2

Typical light distribution curves

Tubular light fitting with LED

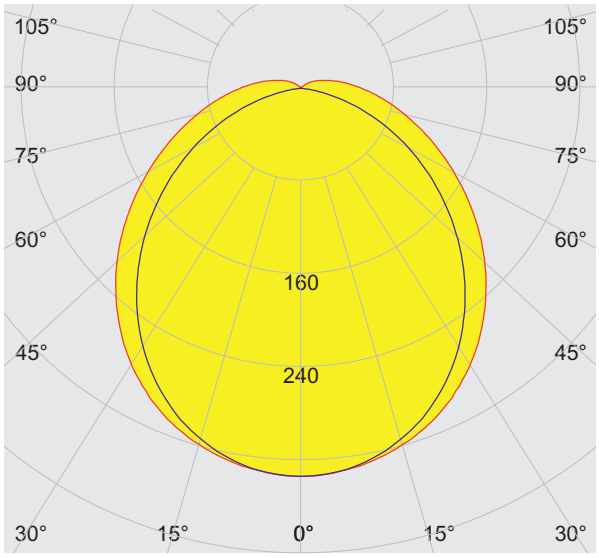

cd/klm 100%

C0 - C180 C90 - C270

With diffuser

Tubular light fitting with LED

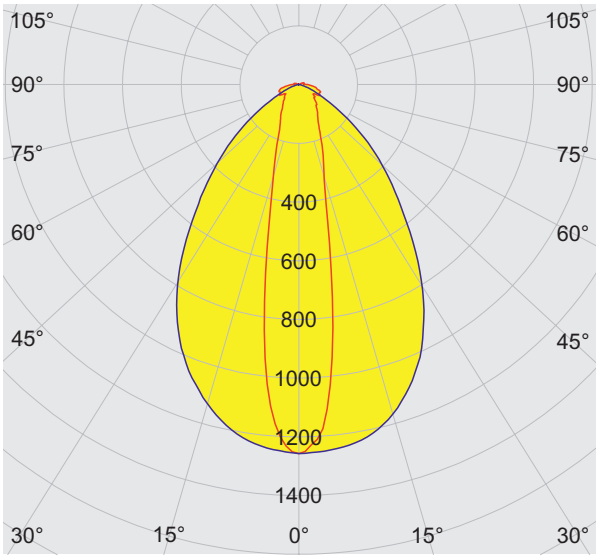

cd/klm 100%

C0 - C180 C90 - C270

Cylinder optics 20°x160°

Tubular light fitting with LED

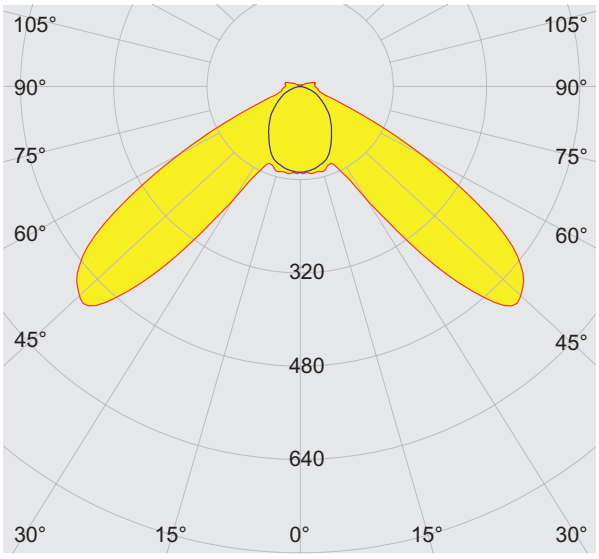

cd/klm 100%

C0 - C180 C90 - C270

Batwing optics

E2

Universal Spotlight LED
Series 6050/6



- Extremely compact universal light fitting with 4 power classes
- Can be used as a ceiling light fitting, pendant light fitting or floodlight
- Three light distribution curves available: Ultra-wide-beam, wide-beam and medium-wide-beam
- Glare-free thanks to opaque light fitting covering
- Quick, easy installation thanks to Ex e connection chamber
- Universally suitable for use in particularly cold environments as cold as -55 °C
- Suitable for particularly high ambient temperatures up to +70 °C

WebCode **6050C**

The 6050/6 universal spotlight is equipment used for lighting areas, work equipment and objects. It can be used indoors and outdoors. The clear lens is available in a matted version to limit the glare. Using an internal reflector, the universal spotlight can be adapted as a narrow beam, wide beam or a medium-wide beam to suit the lighting task.

	IECEx / ATEX					
Zone	0	1	2	20	21	22
Installation in		•	•		•	•

E2

Selection Table

Lamp wattage Rated operational voltage AC Frequency range			20 W 220 – 240 V 50 – 60 Hz							
Protective glass version	Reflector	Gas temperature class	Dust maximum surface temperature	Ambient temperature	Version	Product Type	Art. No.	Listprice €	PS	Weight kg
clear	No	T4	110 °C	-40 °C ... +60 °C	Pendant light fitting	6050/604-202-6B2-000850-000	265418	485.00	64	6.750
Lamp wattage Rated operational voltage AC Frequency range			40 W 120 – 277 V 50 – 60 Hz							
Protective glass version	Reflector	Gas temperature class	Dust maximum surface temperature	Ambient temperature	Version	Product Type	Art. No.	Listprice €	PS	Weight kg
clear	Yes	T4	110 °C	-40 °C ... +60 °C	Pendant light fitting with wall bracket	6050/604-400-6B2-008850-001	267221▲	600.00	64	8.230

▲ Preferred products – in stock or available at short notice

Selection Table

Lamp wattage Rated operational voltage AC Frequency range			60 W 120 – 277 V 50 – 60 Hz							
Protective glass version	Reflector	Gas temperature class	Dust maximum surface temperature	Ambient temperature	Version	Product Type	Art. No.	Listprice €	PS	Weight kg
clear	No	T4	110 °C	-40 °C ... +60 °C	Pendant light fitting with wall bracket	6050/604-600-6B2-000850-001	265420▲	625.00	64	8.230
		T4	110 °C	-40 °C ... +60 °C	Pendant light fitting with ring eyes	6050/604-600-6B2-000850-002	265428▲	595.00	64	6.860
	Yes	T4	110 °C	-40 °C ... +60 °C	Pendant light fitting with wall bracket	6050/604-600-6B2-008850-001	265422▲	640.00	64	8.230
		T4	110 °C	-40 °C ... +60 °C	Pendant light fitting with ring eyes	6050/604-600-6B2-008850-002	265430▲	610.00	64	6.860
Lamp wattage Rated operational voltage AC Frequency range Interfaces			80 W 220 – 240 V 50 – 60 Hz DALI							
Protective glass version	Reflector	Gas temperature class	Dust maximum surface temperature	Ambient temperature	Version	Product Type	Art. No.	Listprice €	PS	Weight kg
clear	No	T4	110 °C	-40 °C ... +70 °C	Pendant light fitting with wall bracket	6050/604-801-7B2-000850-001	270015	735.00	64	8.230
	Yes	T4	110 °C	-40 °C ... +70 °C	Pendant light fitting with wall bracket	6050/604-801-7B2-008850-001	270016	750.00	64	8.230
		T4	110 °C	-40 °C ... +70 °C	Pendant light fitting with ring eyes	6050/604-801-7B2-008850-002	270018	720.00	64	6.860
	No	T4	110 °C	-40 °C ... +70 °C	Pendant light fitting with wall bracket	6050/604-801-7B2-100850-001	270019	730.00	64	8.520

Technical Data

Variant	20 W	40 W	60 W	80 W
Explosion Protection				
IECEx gas explosion protection	Ex db eb op is IIC T.. Gb	Ex db eb op is IIC T.. Gb	Ex db eb op is IIC T.. Gb	Ex db eb op is IIC T.. Gb
IECEx dust explosion protection	Ex tb op is IIIC T.. Db	Ex tb op is IIIC T.. Db	Ex tb op is IIIC T.. Db	Ex tb op is IIIC T.. Db
ATEX gas explosion protection	⟨Ex⟩ II 2 G Ex db eb op is IIC T.. Gb	⟨Ex⟩ II 2 G Ex db eb op is IIC T.. Gb	⟨Ex⟩ II 2 G Ex db eb op is IIC T.. Gb	⟨Ex⟩ II 2 G Ex db eb op is IIC T.. Gb
ATEX dust explosion protection	⟨Ex⟩ II 2 D Ex tb op is IIIC T.. Db	⟨Ex⟩ II 2 D Ex tb op is IIIC T.. Db	⟨Ex⟩ II 2 D Ex tb op is IIIC T.. Db	⟨Ex⟩ II 2 D Ex tb op is IIIC T.. Db
Certificates	ATEX (BVIS), China (CQST), EAC (Sertium), IECEx (BVIS), India (PESO)	ATEX (BVIS), China (CQST), EAC (Sertium), IECEx (BVIS), India (PESO)	ATEX (BVIS), China (CQST), EAC (Sertium), IECEx (BVIS), India (PESO)	ATEX (BVIS), China (CQST), EAC (Sertium), IECEx (BVIS), India (PESO)
Notes	For temperature classes and surface temperatures, see selection table			
Electrical Data				
Nominal current	0.07 – 0.07 A	0.2 – 0.2 A	0.28 – 0.28 A	0.36 – 0.36 A
Lighting Data				
Number of lamps	1	1	1	1
Lamp	LED	LED	LED	LED
Light colour	Neutral white	Neutral white	Neutral white	Neutral white
Luminaire efficacy	122 lm/W	127 lm/W	122 lm/W	113 lm/W
Luminous flux	2000 lm	5100 lm	7400 lm	8800 lm
Colour rendering	≥ 80	≥ 80	≥ 80	≥ 80
Colour temperature	5000 K	5000 K	5000 K	5000 K

▲ Preferred products – in stock or available at short notice

Universal Spotlight LED
Series 6050/6

Technical Data

Variant	20 W	40 W	60 W	80 W
Mechanical Data				
Degree of protection (IP)	IP66 / IP68 (10 m)	IP66 / IP68 (10 m)	IP66 / IP68 (10 m)	IP66 / IP68 (10 m)
Enclosure material	Aluminium, Seawater-resistant	Aluminium, Seawater-resistant	Aluminium, Seawater-resistant	Aluminium, Seawater-resistant
Sealing material	Silicone	Silicone	Silicone	Silicone
Connection terminals solid max.	6 mm²	6 mm²	6 mm²	6 mm²
Connection terminals finely-stranded max.	4 mm²	4 mm²	4 mm²	4 mm²
Type of connection cable	Finely stranded Solid finely-stranded with clip	Finely stranded Solid finely-stranded with clip	Finely stranded Solid finely-stranded with clip	Solid Finely stranded finely-stranded with clip
Design size	1	1	1	1
Components				
Cable entries	1 x M25 x 1.5	1 x M25 x 1.5	1 x M25 x 1.5	1 x M25 x 1.5
Stopping plug	1 x M25 x 1.5	1 x M25 x 1.5	1 x M25 x 1.5	1 x M25 x 1.5
Wire guard	No	No	No	No

Accessories

Figure	Description	Art. No.	Listprice €	PS	Weight kg
Cable gland					
	8161/7-M25-1707 7 ... 17 mm², 50 pieces (delivery lot¹⁾)	239157 ▲	4.30	10	0.019
Mounting bracket					
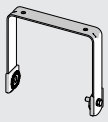	Complete; stainless steel (for additional mounting) for 6050/6	265877	48.00	Z3	1.480
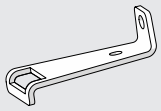	The stainless steel mounting fixture is fastened to the enclosure of the pendant light fitting series 6050/6 by means of two stainless steel screws M8.	269716	27.00	Z3	0.350
Pipe clamp					
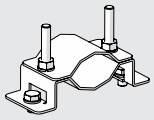	for pipe R 1 1/4" ... 2"	268967	69.00	Z3	0.450
Ring bolt					
	M8, für 6050/6, direct mounting; 1 pair	265874	14.00	Z3	0.400
Stopping plug					
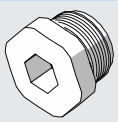	8290/3-M25, 100 pieces	143544 ▲	251.80	10	0.700
	8290/3-M25, 1 piece	143524 ▲	4.70	10	0.007
Wire guard					
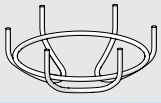	Complete with mounting parts Material: steel wire, stainless steel for 6050/6	221774	37.00	Z3	0.450

Dimensional Drawings (All Dimensions in mm [inches]) – Subject to Alterations

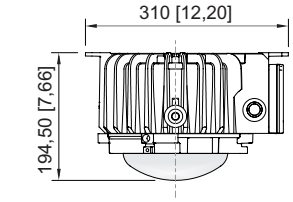

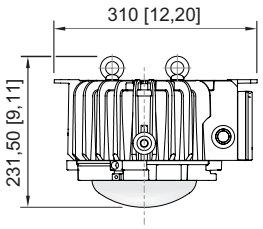

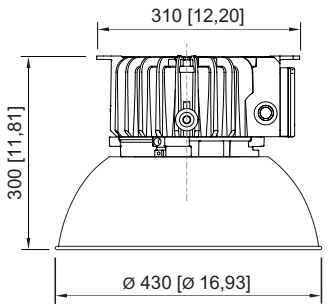

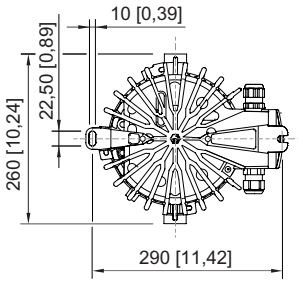

Standard

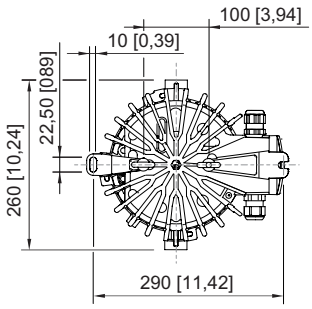

With ring eyes

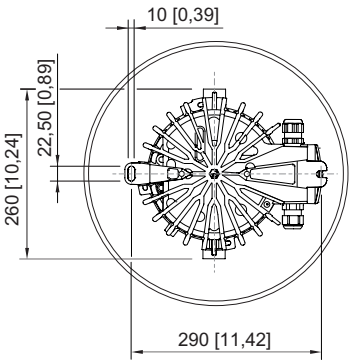

With antiglare device

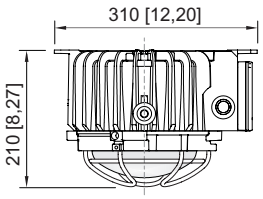

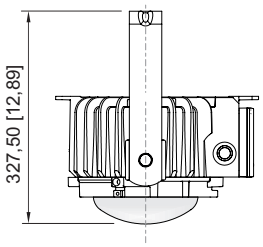

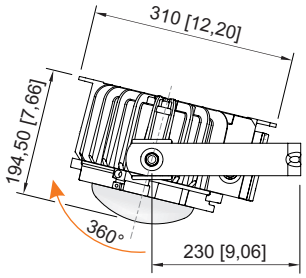

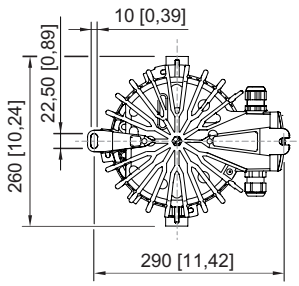

With wire guard

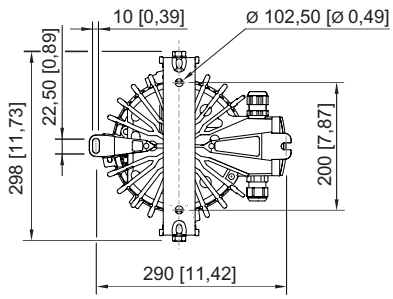

With mounting bracket

E2

Universal Spotlight LED
Series 6050/6

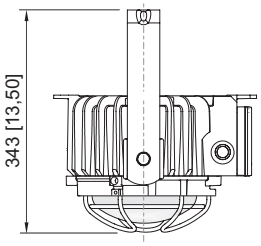

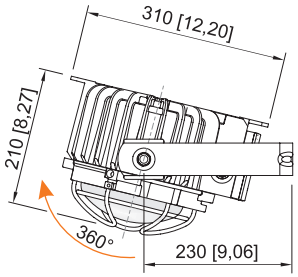

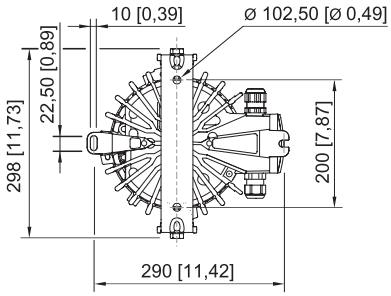

With wire guard and mounting bracket

E2

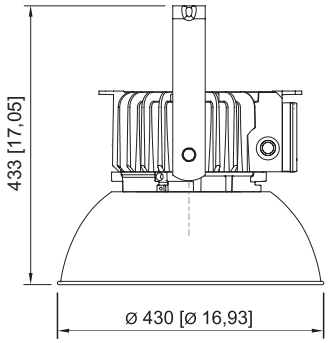

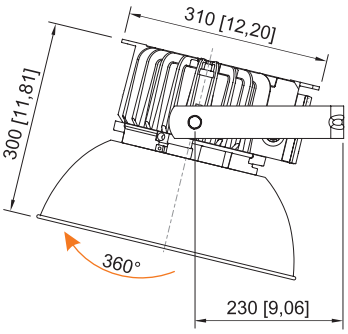

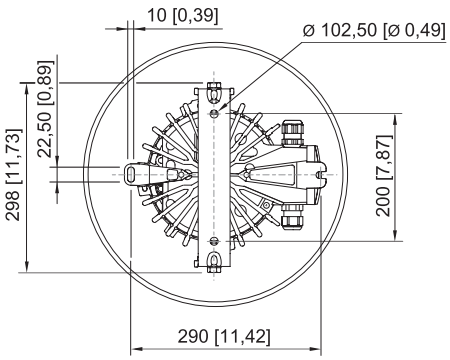

With antiglare device and mounting bracket

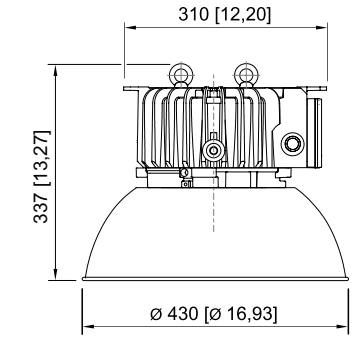

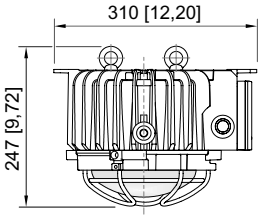

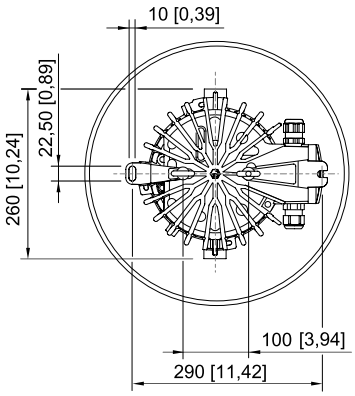

With antiglare device and ring eyes

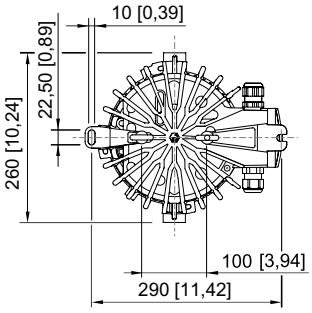

With wire guard and ring eyes

E2

Typical light distribution curves

Universal spotlight LED

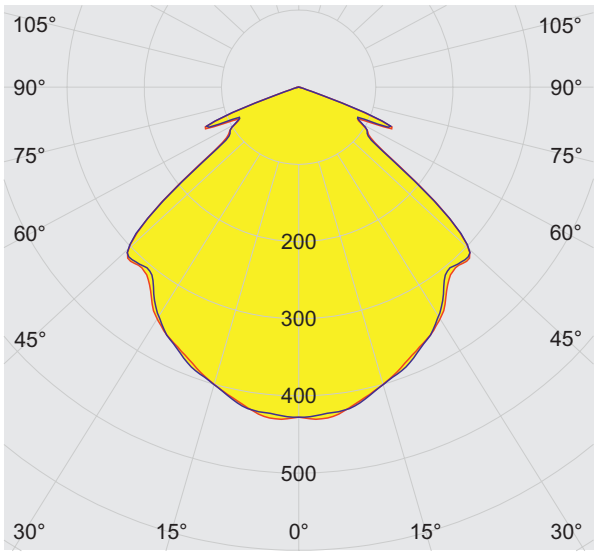

cd/klm η = 100%

C0 - C180 C90 - C270

Protective glass: clear
Without reflector

Universal spotlight LED

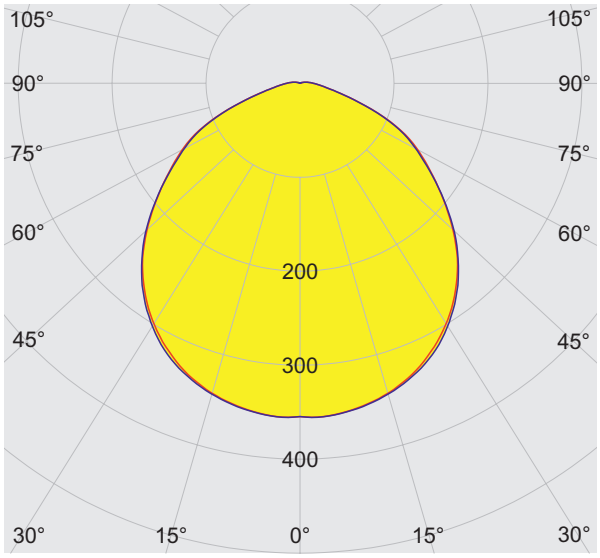

cd/klm 100%

C0 - C180 C90 - C270

Protective glass: matt
Without reflector

E2

Universal spotlight LED

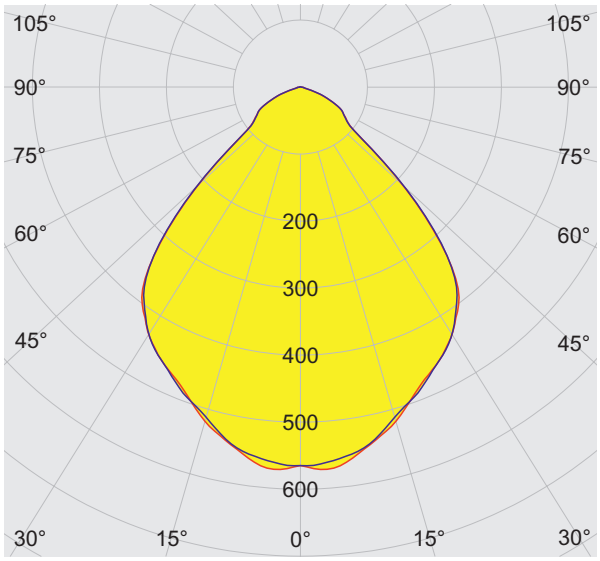

cd/klm 100%

C0 - C180 C90 - C270

Protective glass: clear
With reflector



INSTALLATION EQUIPMENT



Product	Installation in Zone						Series	Page	WebCode
	0	1	2	20	21	22			
Empty Enclosures / Ex d Cabinets									
Empty Enclosures made of Aluminium		•	•		•	•	8250	281	8250A
Installation Switch									
Installation Switch made of Moulded Material		•	•		•	•	8040/11-V30	248	8040F
Junction Boxes									
Junction Boxes made of Moulded Material, with 4 … 8 Sheath Terminals		•	•		•	•	8118	253	8118A
Junction Boxes made of Moulded Material, with 5 Sheath Terminals		•	•		•	•	8102	250	8102A
Maximum Number of Cable Glands									
Terminal Boxes / Control Stations Series 8146 maximum Number of Cable Glands								264	
Terminal Boxes / Control Stations Series 8150 maximum Number of Cable Glands								271	
Terminal Boxes Series 8118 maximum Number of Cable Glands								259	

Product	Installation in Zone						Series	Page	WebCode
	0	1	2	20	21	22			
Plugs and Sockets									
Cable Reel SolConeX NEW		•	•				573 Ex	333	8580A
Coupler Sockets SolConeX 16 A		•	•		•	•	8570/16	291	8570B
Coupler Sockets SolConeX 32 A		•	•		•	•	8571/16	294	8571F
Coupler SolConeX 16 A		•	•		•	•	8572/14	300	8572B
Coupler, Extra-Low Voltage SolConeX 16 A		•	•		•	•	8573/14	309	8573C
Maintenance Socket		•	•		•	•	8570/51	326	8570C
Maintenance Socket		•	•		•	•	8571/51	329	8571C
Maintenance Socket		•	•		•	•	8579/61	331	8579B
Plugs CES 63 A		•	•		•	•	8579/12	323	8579E
Plugs SolConeX 16 A		•	•		•	•	8570/12	288	8570E
Plugs SolConeX 32 A		•	•		•	•	8571/12	316	8571E
Plugs, Extra-Low Voltage SolConeX 16 A		•	•		•	•	8573/12	306	8573D
Wall-Mounting Socket, Compact SolConeX 16 A		•	•		•	•	8572/13	297	8572A
Wall-Mounting Sockets CES 63 A		•	•		•	•	8579/31	319	8579A
Wall-Mounting Sockets SolConeX 16 A		•	•		•	•	8570/11	284	8570A
Wall-Mounting Sockets SolConeX 32 A		•	•		•	•	8571/11	312	8571A
Wall-Mounting Sockets, Compact, Extra-Low Voltage SolConeX 16 A		•	•		•	•	8573/13	303	8573B
Terminal Boxes									
Terminal Boxes Ex e made of Moulded Material		•	•		•	•	8146/1	261	8146A
Terminal Boxes Ex e made of Stainless Steel		•	•		•	•	8150/1	268	8150A
Terminal Boxes Ex i made of Moulded Material		•	•		•	•	8146/2	265	8146P
Terminal Boxes Ex i made of Stainless Steel		•	•		•	•	8150/2	272	8150H
Terminal Boxes made of Aluminium, Ex d		•	•		•	•	8252/1	276	8252A
Terminal Boxes made of Moulded Material		•	•		•	•	8118	256	8118B
Dimensional Drawings									
Terminal Boxes / Control Stations Series 8150 Dimensional Drawings								270	

For additional products and information please refer to r-stahl.com

Installation Switch

Series 8040/11-V30 made of Moulded Material



- Available as 2 pole OFF switch or changeover switch
- Enclosure made of optical fibre reinforced polyester resin
- Degree of protection IP66 according to IEC/EN 60529
- Clear position indicator 0/1 or ON/OFF

WebCode 8040F

The installation switches series 8040/11-V30 are used for lighting installations. Due to the 90° switching, the switching position is clearly indicated. This is an advantage if the lighting installation and the switch are located in different rooms. The fluorescent rotary actuator allows orientation in case of a lighting failure.

	IECEx / ATEX					
Zone	0	1	2	20	21	22
Installation in		•	•		•	•

E3

Selection Table

Version	Off switch					
Product Type	Sealing material	Ambient temperature	Art. No.	Listprice €	PS	Weight kg
8040/11-V30-033-B	NBR	-20 °C ... +60 °C	245655▲	119.00	11	0.600
8040/11-V30-033-S	Silicone	-60 °C ... +60 °C	245656▲	130.70	11	0.600
Version	Two-way circuit					
Product Type	Sealing material	Ambient temperature	Art. No.	Listprice €	PS	Weight kg
8040/11-V30-035-B	NBR	-20 °C ... +60 °C	245657▲	123.30	11	0.615
8040/11-V30-035-S	Silicone	-60 °C ... +60 °C	245658	133.90	11	0.615

Technical Data

Explosion Protection	
IECEx gas explosion protection	Ex db eb IIC T6 Gb
IECEx dust explosion protection	Ex tb IIIC T80 °C Db
ATEX gas explosion protection	Ⓔx II 2 G Ex db eb IIC T6 Gb
ATEX dust explosion protection	Ⓔx II 2 D Ex tb IIIC T80 °C Db
EAC gas explosion protection	1Ex e . IIC T6...T4 Gb X
EAC dust explosion protection	Ex tb IIIC T80 ... T130 °C DbX
Certificates	ATEX (PTB), Brazil (ULB), China (NEPSI), EAC (LPE), IECEx (PTB), India (PESO), Korea (KGS), Taiwan (ITRI)
Notes	Product label may vary. Series devices have certification according to ATEX and IECEX.
Electrical Data	
Rated operational voltage AC	690 V
Rated operational voltage DC	220 V
Rated operational current	16 A (T6)

Technical Data		
Electrical Data		
Notes	switching capacity	AC-1: 16 A, 690 V AC-15: 16 A, 415 V AC-3: 8 A, 500 V AC-3: 4 A, 690 V DC-1: 10 A, 24 V DC-1: 6 A, 60 V
Mechanical Data		
Degree of protection (IP)	IP66	
Degree of protection note	according to IEC/EN 60529	
Enclosure material	Polyester, Glass fibre reinforced	
Connection terminals min.	1.5 mm²	
Connection terminals finely-stranded max.	2.5 mm²	
Connection terminals solid max.	4 mm²	
Service life, min.	10^5 operating cycles	
Components		
Cable entries	1 x M25 Ø 7 to 17 mm	
Stopping plug	2 x M25 x 1.5	

Dimensional Drawings (All Dimensions in mm [inches]) – Subject to Alterations

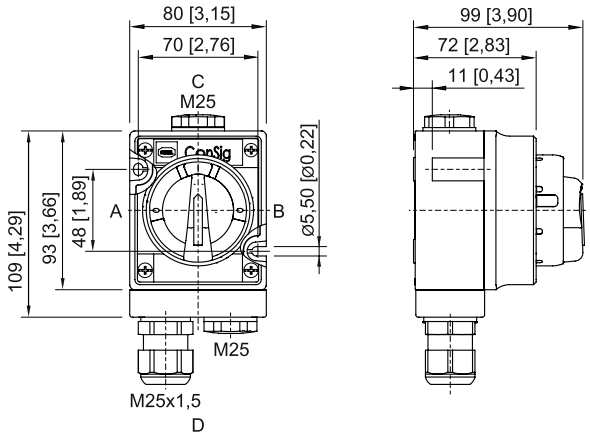

E3

Junction Boxes

Series 8102 made of Moulded Material, with 5 Sheath Terminals



- Small resistant Ex e enclosure for distributing electric energy
- Degree of protection IP66
- Equipped with 4 mantle terminals and 1 PE connection

WebCode 8102A

R. STAHL Series 8102 junction boxes are small Ex e enclosures for transporting and distributing electric energy in hazardous areas. They are made from glass fibre-reinforced polyester resin and are therefore extremely robust. The junction box has 5 mantle terminals, whereby one is used as a PE connection point. The cable dia. range of the mantle terminals is 2 x 4 mm².

	IECEx / ATEX					
Zone	0	1	2	20	21	22
Installation in		•	•		•	•

Selection Table

Product Description		Ex e junction box					
Figure	Product Type	Cable glands	Terminal	Art. No.	Listprice €	PS	Weight kg
	8102/21-32	3 x Polyamide cable gland, black M20 x 1,5 4 – 13 mm	5 x Sheath terminal 4 mm²	218559	56.60	10	0.330
	8102/21-32-C995	3 x Polyamide cable gland, black M20 x 1,5 7 – 13 mm	5 x Sheath terminal 4 mm²	132973	44.90	10	0.200
	8102/21-32-C1013	2 x Polyamide cable gland, black M20 x 1,5 4 – 13 mm 1 x Polyamide stopping plug M20 x 1,5	5 x Sheath terminal 4 mm²	132975	47.20	10	0.330
	8102/21-31	3 x Semi gland M20 6.5 – 14 mm	5 x Sheath terminal 4 mm²	132988 ▲	47.10	10	0.300
Product Description		Ex i junction box					
Figure	Product Type	Cable glands	Terminal	Art. No.	Listprice €	PS	Weight kg
	8102/22-32	3 x Polyamide cable gland, blue M20 x 1,5 4 – 13 mm	5 x Sheath terminal 4 mm²	261597 ▲	56.60	10	0.330

Selection Table

Product Description		Ex i junction box					
Figure	Product Type	Cable glands	Terminal	Art. No.	Listprice €	PS	Weight kg
	8102/22-31	3 x Semi gland M20 6.5 – 14 mm	5 x Sheath terminal 4 mm²	132989 ▲	47.10	10	0.300

Technical Data

Variant	Ex e junction box with semi-glands	Ex e junction box	Ex i junction box with semi-glands	Ex i junction box
Explosion Protection				
IECEx gas explosion protection	Ex eb IIC T6/T5 Gb	Ex eb IIC T6/T5 Gb	Ex ia ib IIC T6 Gb	Ex ia ib IIC T6 Gb
IECEx dust explosion protection	Ex tb IIIC T80 °C ... T90 °C Db	Ex tb IIIC T80 °C ... T90 °C Db	Ex tb IIIC T80 °C Db	Ex tb IIIC T80 °C Db
ATEX gas explosion protection	Ⓔx II 2 G Ex eb IIC T6/T5 Gb	Ⓔx II 2 G Ex eb IIC T6/T5 Gb	Ⓔx II 2 G Ex ia ib IIC T6 Gb	Ⓔx II 2 G Ex ia ib IIC T6 Gb
ATEX dust explosion protection	Ⓔx II 2 D Ex tb IIIC T80 °C ... T90 °C Db	Ⓔx II 2 D Ex tb IIIC T80 °C ... T90 °C Db	Ⓔx II 2 D Ex tb IIIC T80 °C Db	Ⓔx II 2 D Ex tb IIIC T80 °C Db
Certificates	ATEX (PTB), EAC (CCVE), IECEx (PTB)	ATEX (PTB), EAC (CCVE), IECEx (PTB)	ATEX (PTB), EAC (CCVE), IECEx (PTB)	ATEX (PTB), EAC (CCVE), IECEx (PTB)
Notes	Product label may vary. Series devices have certification according to ATEX and IECEX.			
Electrical Data				
Rated operational current	16 A (T6) 25 A (T5)	16 A (T6) 25 A (T5)	10 A (T6)	10 A (T6)
Ambient Conditions				
Ambient temperature	-50 °C ... +55 °C (T6) -50 °C ... +70 °C (T5)	-40 °C ... +40 °C (T6) -40 °C ... +70 °C (T5)	-50 °C ... +70 °C (T6)	-40 °C ... +70 °C (T6)
Mechanical Data				
Degree of protection IP (IEC 60529)	IP66	IP66	IP66	IP66
Enclosure material	Polyester resin, Glass fibre reinforced	Polyester resin, Glass fibre reinforced	Polyester resin, Glass fibre reinforced	Polyester resin, Glass fibre reinforced

Accessories

Figure	Description	Art. No.	Listprice €	PS	Weight kg
Cable gland					
	8161/7-M20-1304 4 ... 13 mm², 50 pieces (delivery lot*)	239156 ▲	4.30	10	0.013
	8161/8 Ex i (black with blue cap nut) 8161/8-M20-1304 4 ... 13 mm² 50 pieces (delivery lot*)	239164 ▲	4.70	10	0.013
Stopping plug					
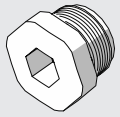	8290/3-M20, 1 piece	143522 ▲	3.50	10	0.005

E3

Dimensional Drawings (All Dimensions in mm [inches]) – Subject to Alterations

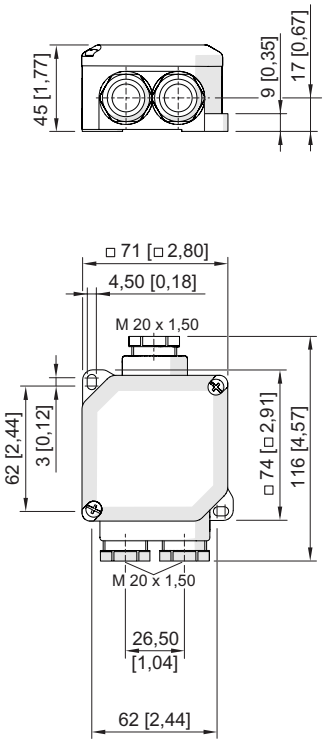

with semi glands 3 x M20

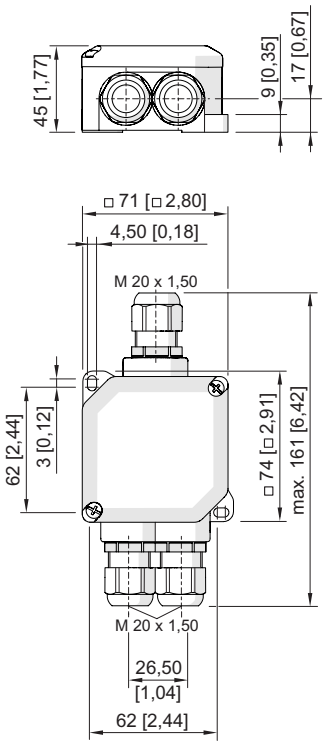

with cable entries 3 x M20

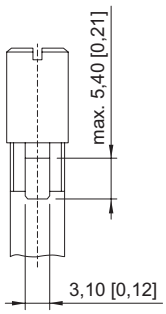

Layout of available connection chamber of sheath terminal

E3



- Resistant Ex e enclosure, universally usable as connection or junction boxes and/or to safeguard electric distributors up to 6.3 A
- Degree of protection IP66
- With mantle terminals or with a combination of mantle terminals and miniature fuses (optional)

WebCode **8118A**

R. STAHL Series 8118 Ex e junction boxes are equipped with 4, 5 or 8 mantle terminals depending on their design size. As an option, miniature fuses can still be installed in addition. Junction boxes are also suitable for safeguarding. The robust enclosure made from glass fibre-reinforced polyester resin can be equipped with plastic or metal cable glands.

	IECEx / ATEX					
Zone	0	1	2	20	21	22
Installation in		•	•		•	•

Selection Table

Product Description Ambient temperature °C		Ex e junction box -60 … +40 °C					
Figure	Product Type	Rated operational voltage AC	Cable glands	Terminal	Art. No.	Listprice €	PS
	8118/121-804-2	750 V	3 x Polyamide stopping plug M25 x 1,5	8 x Sheath terminal 6 mm²	202991	63.10	10
Product Description Ambient temperature °C		Ex e junction box -40 … +40 °C					
Figure	Product Type	Rated operational voltage AC	Cable glands	Terminal	Art. No.	Listprice €	PS
	8118/111-503	550 V	3 x Polyamide cable gland, black M20 x 1,5 4 – 13 mm 1 x Polyamide stopping plug M25 x 1,5	5 x Sheath terminal 4 mm²	133248▲	53.40	10
	8118/111-401	550 V	2 x Polyamide cable gland, black M20 x 1,5 4 – 13 mm 1 x Polyamide stopping plug M20 x 1,5	4 x Sheath terminal 4 mm²	133077▲	48.10	10

Junction Boxes

Series 8118 made of Moulded Material, with 4 … 8 Sheath Terminals

Selection Table

Product Description Ambient temperature °C		Ex e junction box -40 … +40 °C					
Figure	Product Type	Rated operational voltage AC	Cable glands	Terminal	Art. No.	Listprice €	PS
	8118/121-807	750 V	4 x Polyamide cable gland, black M25 x 1,5 7 – 17 mm 2 x Polyamide stopping plug M25 x 1,5	8 x Sheath terminal 6 mm²	133126▲	70.20	10
	8118/121-806	750 V	4 x Polyamide cable gland, black M20 x 1,5 4 – 13 mm 2 x Polyamide stopping plug M20 x 1,5	8 x Sheath terminal 6 mm²	133120▲	69.40	10
	8118/121-805	750 V	3 x Polyamide cable gland, black M25 x 1,5 7 – 17 mm 1 x Polyamide stopping plug M25 x 1,5	8 x Sheath terminal 6 mm²	133114▲	65.10	10
	8118/121-538	750 V	4 x Polyamide cable gland, black M25 x 1,5 7 – 17 mm	5 x Sheath terminal 6 mm²	133252▲	58.90	10
	8118/131-814	750 V	6 x Polyamide cable gland, black M25 x 1,5 7 – 17 mm 4 x Polyamide stopping plug M25 x 1,5	8 x Sheath terminal 10 mm²	133210▲	118.00	10
	8118/131-811	750 V	4 x Polyamide cable gland, black M32 x 1,5 9 – 21 mm 2 x Polyamide stopping plug M32 x 1,5	8 x Sheath terminal 10 mm²	133186▲	121.00	10
Product Description Ambient temperature °C		Ex i junction box -40 … +75 °C					
Figure	Product Type	Rated operational voltage AC	Cable glands	Terminal	Art. No.	Listprice €	PS
	8118/211-403	60 V	3 x Polyamide cable gland, blue M25 x 1,5 7 – 17 mm 1 x Polyamide stopping plug (Provided separately) M25 x 1,5	4 x Sheath terminal 4 mm²	133104▲	57.20	10
	8118/211-401	60 V	2 x Polyamide cable gland, blue M20 x 1,5 4 – 13 mm 1 x Polyamide stopping plug (Provided separately) M20 x 1,5	4 x Sheath terminal 4 mm²	133084▲	52.30	10

Junction boxes with integral equipment fuse on request

Technical Data

Variant	Ex e junction box	Ex i junction box
Explosion Protection		
IECEx gas explosion protection	Ex eb IIC T6/T5 Gb	Ex ia ib IIC T6 Gb
IECEx dust explosion protection	Ex tb IIIC T80 °C ... T95 °C ... T130 °C Db	Ex tb IIIC T80 °C Db
ATEX gas explosion protection	Ⓔx II 2 G Ex eb IIC T6/T5 Gb	Ⓔx II 2 G Ex ia ib IIC T6 Gb
ATEX dust explosion protection	Ⓔx II 2 D Ex tb IIIC T80 °C ... T95 °C ... T130 °C Db	Ⓔx II 2 D Ex tb IIIC T80 °C Db

Technical Data

Variant	Ex e junction box	Ex i junction box
Explosion Protection		
Certificates	ATEX (PTB), Brazil (ULB), China (NEPSI), EAC (LPE), IECEx (PTB)	ATEX (PTB), Brazil (ULB), China (NEPSI), EAC (LPE), IECEx (PTB)
Notes	CCC certificate available from 2021 onward	CCC certificate available from 2021 onward
Ship approval	BVIS	BVIS
Notes	Product label may vary. Series devices have certification according to ATEX and IECEX.	
Mechanical Data		
Degree of protection IP (IEC 60529)	IP66	IP66
Enclosure material	Polyester resin, Glass fibre reinforced	Polyester resin, Glass fibre reinforced

Dimensional Drawings (All Dimensions in mm [inches]) – Subject to Alterations

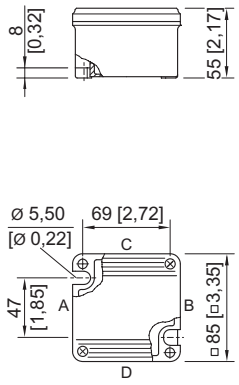

8118/.1.
enclosure size 1

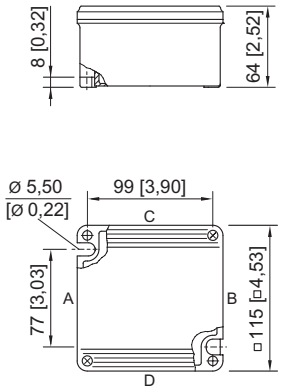

8118/.2.
enclosure size 2

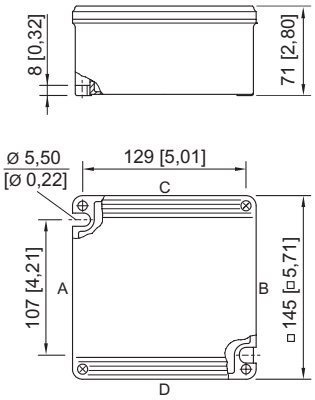

8118/.3.
enclosure size 3

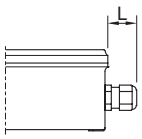

Length L
protrusion length for cable glands, Series 8161
in case of M20: 25 … 31 [0.98 ... 1.22]
in case of M25: 27 … 33 [1.06 ... 1.3]
in case of M32: 32 … 39 [1.26 ... 1.54]
protrusion length for cable glands with strain relief, Series HSK-K-MZ
in case of M25: 41 [1,61]

E3

Terminal Boxes
Series 8118 made of Moulded Material



- Compact, impact-resistant enclosures, also in versions with integrated metal bracket for the optimised assembly of cable glands
- Customer-specific equipping with terminals, cable glands and miniature fuses
- Degree of protection IP66

WebCode 8118B

R. STAHL Series 8118 terminal boxes are equipped, in accordance with customer specifications, with various series terminals and cable glands made from plastic or metal, if required also with miniature fuses. They are available in 3 design sizes and are made from glass fibre reinforced polyester resin.

	IECEx / ATEX					
Zone	0	1	2	20	21	22
Installation in		•	•		•	•

Selection Table

Product Description Ambient temperature °C		Ex e terminal box -55 … +40 °C							
Figure	Product Type	Cable glands	Terminal	Terminal rail	Rated operational voltage AC	Art. No.	Listprice €	PS	Weight kg
	8118/122-118-0	4 x Polyamide cable gland, black with plug M25 x 1,5 7 – 17 mm	1 x WAGO 221 2-conductor 4 mm² light grey	35 x 90 mm (1x)	440 V	273361▲	75.00	10	0.620
	8118/132-149-0	6 x Polyamide cable gland, black with plug M25 x 1,5 7 – 17 mm	1 x WAGO 221 2-conductor 4 mm² light grey	35 x 100 mm (1x)	440 V	277900▲	90.00	10	–
	8118/132-117-0	6 x Polyamide cable gland, black with plug M25 x 1,5 7 – 17 mm	1 x WAGO 221 2-conductor 4 mm² light grey	35 x 100 mm (1x)	440 V	273362▲	90.00	10	0.820
Product Description Ambient temperature °C		Ex e terminal box -50 … +55 °C							
Figure	Product Type	Cable glands	Terminal	Terminal rail	Rated operational voltage AC	Art. No.	Listprice €	PS	Weight kg
	8118/122-331-GB	2 x Polyamide stopping plug M20 x 1,5	6 x Weidmüller WDU 2-conductor, 2.5 mm², beige 2 x Weidmüller WPE 2-conductor, 4 mm², green-yellow	–	690 V	133117▲	89.00	10	0.720

▲ Preferred products – in stock or available at short notice

Selection Table

Figure	Product Type	Cable glands	Terminal	Terminal rail	Rated operational voltage AC	Art. No.	Listprice €	PS	Weight kg
Product Description Ambient temperature °C		Ex e terminal box -40 … +40 °C							
	8118/112-047-0	2 x Polyamide cable gland, black M20 x 1,5 4 – 13 mm 1 x Polyamide stopping plug (Provided separately) M20 x 1,5	3 x WAGO 264 2-conductor, 2.5 mm², grey 1 x WAGO 264 4-conductor, 2.5 mm², green-yellow	15 x 70 mm (1x)	690 V	224642 ▲	74.60	10	0.360
	8118/122-504-0	3 x Polyamide cable gland, black M25 x 1,5 7 – 17 mm 2 x Polyamide stopping plug M25 x 1,5	11 x Phoenix UT 2-conductor, 4 mm², grey 2 x Phoenix USLKG 2-conductor, 4 mm², green-yellow	35 x 90 mm (1x)	690 V	224644 ▲	110.50	10	0.610
Product Description Ambient temperature °C		Ex i terminal box -40 … +75 °C							
	8118/212-047-0	2 x Polyamide cable gland, blue M20 x 1,5 4 – 13 mm 1 x Polyamide stopping plug (Provided separately) M20 x 1,5	3 x WAGO 264 4-conductor, 2.5 mm², blue 1 x WAGO 264 4-conductor, 2.5 mm², grey	15 x 70 mm (1x)	60 V	224643 ▲	74.60	10	0.360
	8118/222-504-0	3 x Polyamide cable gland, blue M25 x 1,5 7 – 17 mm 2 x Polyamide stopping plug (Provided separately) M25 x 1,5	9 x Phoenix UT 2-conductor, 4 mm², blue 2 x Phoenix UT 2-conductor, 4 mm², grey	35 x 90 mm (1x)	60 V	224645	110.50	10	0.610

Enclosure equipped with terminals
Stopping plugs are enclosed separately

Technical Data

Variant	Terminal box Ex e Phoenix UT	Terminal box Ex e WAGO 221	Terminal box Ex e Weidmüller WDU	Terminal box Ex i Phoenix UT
Explosion Protection				
IECEx gas explosion protection	Ex eb IIC T6/T5 Gb	Ex eb IIC T6/T5 Gb	Ex eb IIC T5/T4 Gb	Ex ia ib IIC T6 Gb
IECEx dust explosion protection	Ex tb IIIC T80 °C ... T95 °C Db	Ex tb IIIC T80 °C ... T95 °C Db	Ex tb IIIC T95 °C ... T130 °C Db	Ex tb IIIC T80 °C Db
ATEX gas explosion protection	⟨Ex⟩ II 2 G Ex eb IIC T6/T5 Gb	⟨Ex⟩ II 2 G Ex eb IIC T6/T5 Gb	⟨Ex⟩ II 2 G Ex eb IIC T5/T4 Gb	⟨Ex⟩ II 2 G Ex ia ib IIC T6 Gb
ATEX dust explosion protection	⟨Ex⟩ II 2 D Ex tb IIIC T80 °C ... T95 °C Db	⟨Ex⟩ II 2 D Ex tb IIIC T80 °C ... T95 °C Db	⟨Ex⟩ II 2 D Ex tb IIIC T95 °C ... T130 °C Db	⟨Ex⟩ II 2 D Ex tb IIIC T80 °C Db
Certificates	ATEX (PTB), Brazil (ULB), China (NEPSI), EAC (LPE), IECEx (PTB)	ATEX (PTB), Brazil (ULB), China (NEPSI), IECEx (PTB), Korea (KGS)	ATEX (PTB), Brazil (ULB), China (NEPSI), EAC (LPE), IECEx (PTB)	ATEX (PTB), Brazil (ULB), China (NEPSI), EAC (LPE), IECEx (PTB)
Ship approval	BVIS	BVIS	BVIS	BVIS
Notes	CCC certificate available from 2021 onward	CCC certificate available from 2021 onward	CCC certificate available from 2021 onward	CCC certificate available from 2021 onward
Notes	Product label may vary. Series devices have certification according to ATEX and IECEX.			
Mechanical Data				
Degree of protection IP (IEC 60529)	IP66	IP66	IP66	IP66
Enclosure material	Polyester resin, Glass fibre reinforced	Polyester resin, Glass fibre reinforced	Polyester resin, Glass fibre reinforced	Polyester resin, Glass fibre reinforced
Silicone-free	No	No	No	No

E3

Accessories

Figure	Description	Art. No.	Listprice €	PS	Weight kg
Connection terminal					
	WAGO 221-482 for 2 x 0.2 ... 4 mm²	272622	1.00	Z1	0.100
	WAGO 221-483 for 3 x 0.2 ... 4 mm²	272623	1.20	Z1	0.100
	WAGO 221-485 for 5 x 0.2 ... 4 mm²	272624	1.70	Z1	0.100
Fixing adapter					
	WAGO 221-501 for 4 mm²	272625	1.00	Z1	0.100
Mounting foot					
	WAGO 209-120; 6.4 mm	272626	0.60	Z1	0.100

Dimensional Drawings (All Dimensions in mm [inches]) – Subject to Alterations

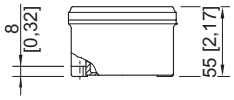

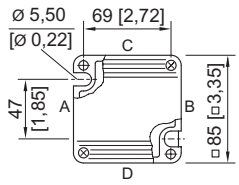

8118/.1.
enclosure size 1

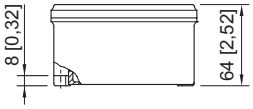

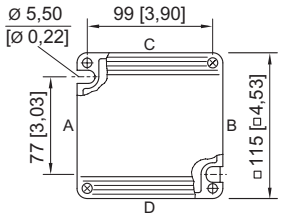

8118/.2.
enclosure size 2

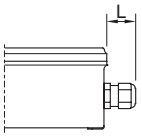

Length L
protrusion length for cable glands, Series 8161
in case of M20: 25 … 31 [0.98 ... 1.22]
in case of M25: 27 … 33 [1.06 ... 1.3]
in case of M32: 32 … 39 [1.26 ... 1.54]
protrusion length for cable glands with strain relief, Series HSK-K-MZ
in case of M25: 41 [1,61]

Maximum Number of Mountable Cable Glands Series 8161

		Enclosure size/side		
		8118/.1.	8118/.2.	8118/.3.
		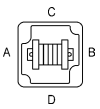	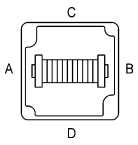	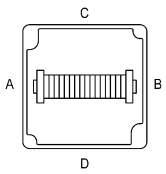
Type	Size	Side C / D	Side C / D	Side C / D
 Cable glands Series 8161	M16 x 1.5 M20 x 1.5 M25 x 1.5 M32 x 1.5	2 1 - -	3 3 2 1	5 4 3 2

E3

TERMINAL BOX CONFIGURATOR HELP

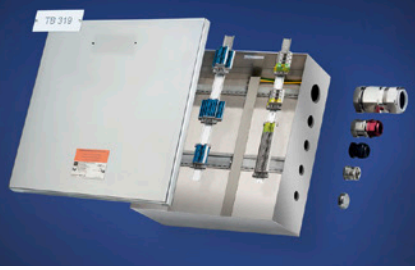

The Terminal Box Configurator of R. STAHL ensures to generate your terminal box individually according to your specifications.

You can use the Terminal Box Configurator to specify your customised terminal box in accordance with your requirements and choose between 8146 GRP and 8150 stainless steel enclosures. It offers a variety of terminals, cable glands and blanking plugs. TAG Labels can be individually specified in either plastic or stainless steel. PE and PA connections are automatically included. The temperature class depends on the ambient temperature. Should you require a higher ambient temperature, then please reduce the temperature class from T6 to T5 or T4.

As a guest user you can configure your terminal box and request a quotation.
As a registered user in Germany you have unlimited access to all functions of the Terminal Box Configurator including prices. You can also request a quotation as well as place an order right away.
Up to 25 terminal boxes can be assembled via our fast production line ready for despatch to many European destinations within just three working days.

Configure your terminal box at r-stahl.com/configurator now.

Should you have any questions please do not hesitate to get in touch with our sales contact.

Shopping Cart



Start a new configuration
- Select a relevant picture



Amendment of configured item
- Tick relevant item
- Click on “edit position”



Copy configured items to clipboard
- Tick relevant item(s)
- Click on “copy to clipboard”



Delete configured item from shopping cart
- Tick relevant item(s)
- Click on “delete selected”



Update shopping cart when amending quantities
- Amend quantities of relevant item(s)
- Click on “update shopping cart”



Request quotation or place order
- Check / amend quantities
- Click on “finish”



Technical data of configured item
- Tick relevant item
- Click on “info button”



Overview of configured items via e-mail
- Tick relevant item(s)
- Click on “envelope button”

Clipboard



Copy configured items to clipboard
- Tick relevant item(s)
- Click on “copy to clipboard”



Delete configured item from shopping cart
- Tick relevant item(s)
- Click on “delete selected”



Overview of configured items via e-mail
- Tick relevant item(s)
- Click on “envelope button”



- Wide range of Ex e terminal boxes in various sizes and materials, degree of protection IP66
- Customised equipping in accordance with customer specifications
- Enclosures with captive cover screws, if required, flange on enclosure sides is possible

WebCode **8146A**

R. STAHL Series 8146 terminal boxes, made of high-quality, glass fibre-reinforced polyester resin, are ideal for use in harsh operating conditions. With eight basic sizes in various heights, they are universally usable. If requested by the customer, they are equipped with series terminals up to 300 mm² and, as an option, a flange on several enclosure sides is possible.

	IECEx / ATEX					
Zone	0	1	2	20	21	22
Installation in		•	•		•	•

Selection Table

Product Description	Ex e terminal box								
Figure	Product Type	Terminal	Terminal rail	Earth rail	Max. no. of terminals 2.5 mm²	Art. No.	Listprice €	PS	Weight kg
	8146/1S71	1 x Phoenix UT 2-conductor, 2.5 mm², grey	35 x 301 mm (1x)	7 x 4 mm² (1x)	49	136738▲	168.00	10	2.010
	8146/1031	1 x Phoenix UT 2-conductor, 2.5 mm², grey 2 x Phoenix UT 2-conductor, 2.5 mm², green-yellow	35 x 90 mm (1x)	–	6	136603▲	87.40	10	0.640
	8146/1041	1 x Phoenix UT 2-conductor, 2.5 mm², grey 2 x Phoenix UT 2-conductor, 2.5 mm², green-yellow	35 x 133 mm (1x)	–	19	136665▲	114.00	10	0.730
	8146/1051	1 x Phoenix UT 2-conductor, 2.5 mm², grey	35 x 133 mm (1x)	7 x 4 mm² (1x)	19	136688▲	120.00	10	1.060
	8146/1061	1 x Phoenix UT 2-conductor, 2.5 mm², grey	35 x 189 mm (1x)	7 x 4 mm² (1x)	27	136714▲	153.00	10	1.400

The enclosures are equipped with mounting rails, PE terminals and 1 terminal block of the specified type.
2 connections can be established for each terminal on the PE rail.

Technical Data	
Explosion Protection	
IECEx gas explosion protection	Ex eb IIC T6/T5/T4 Gb
IECEx dust explosion protection	Ex tb IIIC T80 °C ... T95 °C ... T130 °C Db
ATEX gas explosion protection	Ⓔx II 2 G Ex eb IIC T6/T5/T4 Gb
ATEX dust explosion protection	Ⓔx II 2 D Ex tb IIIC T80 °C ... T95 °C ... T130 °C Db
EAC gas explosion protection	1 Ex e d ia mb IIC T6...T3 Gb X
EAC dust explosion protection	Ex tb IIIC T80° ... T135°C DbX
Certificates	ATEX (PTB), Brazil (ULB), Canada / USA (UL), China (NEPSI), EAC (LPE), IECEx (PTB), India (PESO), Korea (KGS), Taiwan (ITRI), USA (UL)
Notes	CCC certificate available from 2021 onward
Ship approval	BVIS
Notes	Product label may vary. Series devices have certification according to ATEX and IECEX.
Electrical Data	
Rated operational voltage AC	690 V
Notes	Rated operational voltage max. 1100 V AC/DC (depending on terminal types and explosion-protected components used)
Ambient Conditions	
Ambient temperature	-60 °C ... +40 °C (T6) -60 °C ... +55 °C (T5) -60 °C ... +70 °C (T4)
Mechanical Data	
Degree of protection IP (IEC 60529)	IP66
Enclosure material	Polyester resin, Glass fibre reinforced
Silicone-free	No
Components	
Notes	Please observe the information of the terminal manufacturer, e.g. the tightening torque

E3

Dimensional Drawings (All Dimensions in mm [inches]) – Subject to Alterations

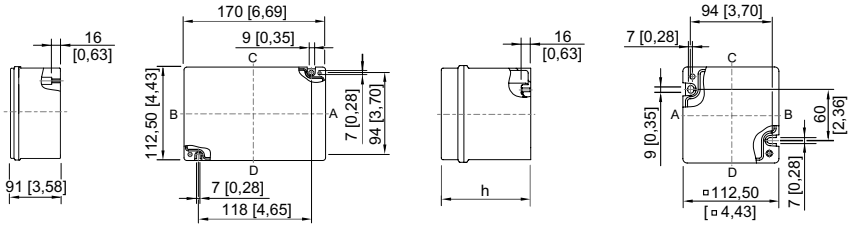

8146/.04.

8146/.03.
8146/.031: h = 91 mm
8146/.037: h = 104 mm

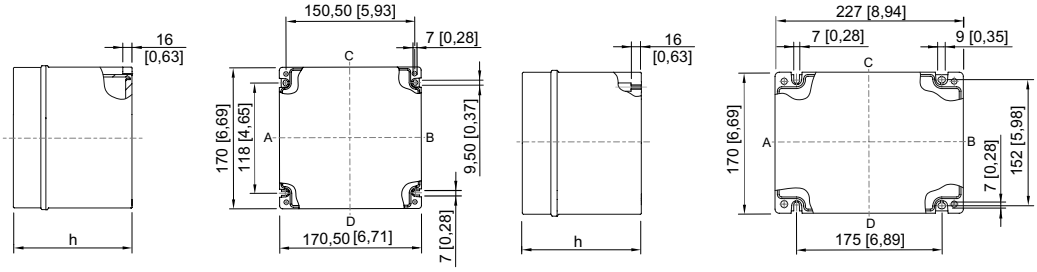

8146/.05.
8146/.051: h = 91 mm
8146/.052: h = 131 mm

8146/.06.
8146/.061: h = 91 mm
8146/.062: h = 131 mm

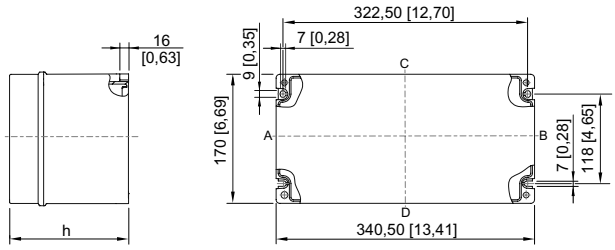

8146/.S7.
8146/.S71: h = 91 mm
8146/.S73: h = 150 mm

Terminal Boxes / Control Stations

Series 8146 maximum Number of Cable Glands

Maximum Number of Mountable Cable Glands Series 8161

Attention:
The maximum number of cable glands which can be mounted in the enclosure walls depends on the position of the installed mounting rails and components.

Cable gland | Enclosure size



8146/.031



Size	without flange A/B	without flange C/D	without flange A/B	without flange C/D	with flange A/B	with flange C/D
M16 x 1.5	3	4	5	7	-	7
M20 x 1.5	2	2	2	5	-	3
M25 x 1.5	1	2	2	3	-	3
M32 x 1.5	1	1	1	2	-	2
M40 x 1.5	-	1	1	1	-	2
M50 x 1.5	-	-	-	-	-	-

8146/.041



Size	without flange A/B	without flange C/D	without flange A/B	without flange C/D	with flange A/B	with flange C/D
M16 x 1.5	5	7	5	10	-	7
M20 x 1.5	2	5	3	7	-	3
M25 x 1.5	2	3	2	6	-	3
M32 x 1.5	1	2	1	3	-	2
M40 x 1.5	1	1	1	2	-	2
M50 x 1.5	-	-	1	2	-	-

8146/.241/.242



Size	without flange A/B	without flange C/D	with flange A/B	with flange C/D
M16 x 1.5	6	8	-	7
M20 x 1.5	4	6	-	3
M25 x 1.5	3	4	-	3
M32 x 1.5	2	2	-	2
M40 x 1.5	1	2	-	2
M50 x 1.5	-	-	-	-

8146/.051/.052



Size	without flange A/B	without flange C/D	with flange A/B	with flange C/D
M16 x 1.5	8	10	7	7
M20 x 1.5	6	7	3	3
M25 x 1.5	4	5	3	3
M32 x 1.5	2	3	2	2
M40 x 1.5	2	2	2	2
M50 x 1.5	-	-	-	-

8146/.061/.062

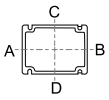

Size	without flange A/B	without flange C/D	with flange A/B	with flange C/D
M16 x 1.5	8	18	7	14
M20 x 1.5	6	14	3	6
M25 x 1.5	4	9	3	6
M32 x 1.5	2	6	2	4
M40 x 1.5	2	4	2	4
M50 x 1.5	-	1	-	-

8146/.071/.072

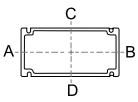



8146/.073/.075

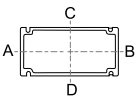

Size	without flange A/B	without flange C/D	without flange A/B	without flange C/D	with flange A/B	with flange C/D
M16 x 1.5	20	43	12	32	6	20	-	14
M20 x 1.5	12	28	9	19	4	16	-	6
M25 x 1.5	9	20	6	14	3	10	-	6
M32 x 1.5	5	12	4	10	2	7	-	4
M40 x 1.5	4	8	2	5	1	5	-	4
M50 x 1.5	2	5	1	3	-	-	-	-
M63 x 1.5	1	3	1	2	-	-	-	-

8146/.S71

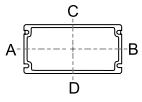

Size	without flange A/B	without flange C/D	with flange A/B	with flange C/D
M16 x 1.5	13	50	-	32
M20 x 1.5	8	32	-	19
M25 x 1.5	7	23	-	14
M32 x 1.5	4	13	-	10
M40 x 1.5	2	9	-	5
M50 x 1.5	1	5	-	3
M63 x 1.5	1	3		2

8146/.S73

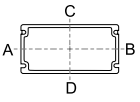

Size	without flange A/B	without flange C/D	with flange A/B	with flange C/D
M16 x 1.5	18	20	14	14
M20 x 1.5	14	16	6	6
M25 x 1.5	9	10	6	6
M32 x 1.5	6	7	4	4
M40 x 1.5	4	5	4	4
M50 x 1.5	-	-	-	-
M63 x 1.5	-	-	-	-

8146/.081/.082

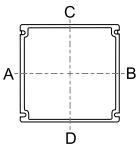



8146/.083/.085/.086

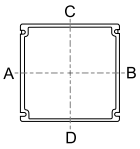

Size	without flange A/B	without flange C/D	without flange A/B	without flange C/D	with flange A/B	with flange C/D
M16 x 1.5	43	50	32	32	20	36	14	28
M20 x 1.5	28	32	19	19	16	29	6	12
M25 x 1.5	20	23	14	14	10	17	6	12
M32 x 1.5	12	13	10	10	7	12	4	8
M40 x 1.5	8	9	5	5	5	9	4	8
M50 x 1.5	5	5	3	3	-	-	-	-
M63 x 1.5	3	3	2	2	-	-	-	-

8146/.091/.092

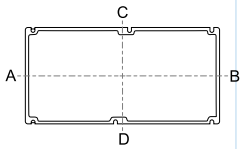

Size	without flange A/B	without flange C/D	with flange A/B	with flange C/D
M16 x 1.5	50	90	32	64
M20 x 1.5	32	58	19	38
M25 x 1.5	23	44	14	28
M32 x 1.5	13	26	10	20
M40 x 1.5	9	18	5	10
M50 x 1.5	5	7	3	6
M63 x 1.5	3	6	2	4

8146/.093/.095

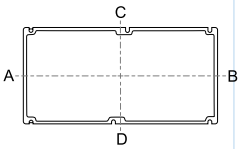

E3



- Wide range of Ex i terminal boxes in various sizes and materials, degree of protection IP66
- Customised equipping in accordance with customer specifications
- Enclosures with captive cover screws, if required, flange on enclosure sides is possible

WebCode **8146P**

R. STAHL Series 8146 terminal boxes, made of high-quality, glass fibre-reinforced polyester resin, are ideal for use in harsh operating conditions. With eight basic sizes in various heights, they are universally usable. If requested by the customer, they are equipped with series terminals up to 300 mm² and, as an option, a flange on several enclosure sides is possible.

	IECEx / ATEX					
Zone	0	1	2	20	21	22
Installation in		•	•		•	•

Selection Table

Product Description	Ex i terminal box								
Figure	Product Type	Terminal	Terminal rail	PA rail	Max. no. of terminals 2.5 mm²	Art. No.	Listprice €	PS	Weight kg
	8146/2S71	1 x Phoenix UT 2-conductor, 2.5 mm², blue	35 x 301 mm (1x)	7 x 4 mm² (1x)	49	136739	173.00	10	2.010
	8146/2041	1 x Phoenix UT 2-conductor, 2.5 mm², blue 2 x Phoenix UT 2-conductor, 4 mm², grey	35 x 133 mm (1x)	–	19	136666	114.00	10	0.730
	8146/2051	1 x Phoenix UT 2-conductor, 2.5 mm², blue	35 x 133 mm (1x)	7 x 4 mm² (1x)	19	136689	120.00	10	1.000
	8146/2061	1 x Phoenix UT 2-conductor, 2.5 mm², blue	35 x 189 mm (1x)	7 x 4 mm² (1x)	27	136715	153.00	10	1.400

The enclosures are equipped with mounting rails, PE terminals and 1 terminal block of the specified type.
2 connections can be established for each terminal on the PE rail.

Technical Data

Explosion Protection	
IECEx gas explosion protection	Ex ia ib IIC T6 Gb
IECEx dust explosion protection	Ex tb IIIC T80 °C Db
ATEX gas explosion protection	Ⓔx II 2 G Ex ia ib IIC T6 Gb
ATEX dust explosion protection	Ⓔx II 2 D Ex tb IIIC T80 °C Db

Technical Data	
Explosion Protection	
EAC gas explosion protection	Ex 1 Ex e d ia mb IIC T6...T3 Gb X
EAC dust explosion protection	Ex tb IIIC T80° ... T135°C DbX
Certificates	ATEX (PTB), Brazil (ULB), China (NEPSI), EAC (LPE), IECEx (PTB), India (PESO), Taiwan (ITRI)
Notes	CCC certificate available from 2021 onward
Ship approval	BVIS
Notes	Product label may vary. Series devices have certification according to ATEX and IECEX.
Electrical Data	
Rated operational voltage AC	60 V
Notes	depend on the terminal type used and the explosion protected components
Ambient Conditions	
Ambient temperature	-60 °C ... +75 °C
Mechanical Data	
Degree of protection IP (IEC 60529)	IP66
Enclosure material	Polyester resin, Glass fibre reinforced
Silicone-free	No
Components	
Notes	Please observe the information of the terminal manufacturer, e.g. the tightening torque

Dimensional Drawings (All Dimensions in mm [inches]) – Subject to Alterations

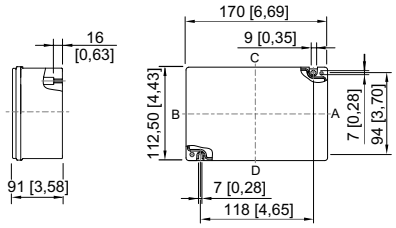

8146/.04.

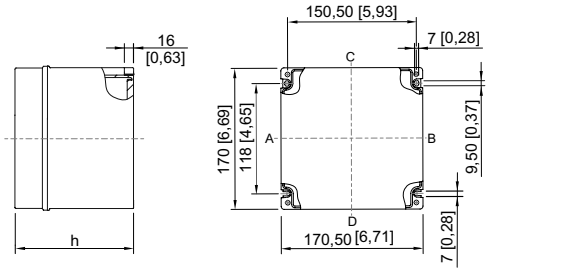

8146/.05.
8146/.051: h = 91 mm
8146/.052: h = 131 mm

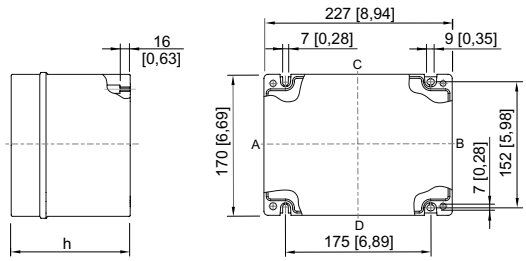

8146/.06.
8146/.061: h = 91 mm
8146/.062: h = 131 mm

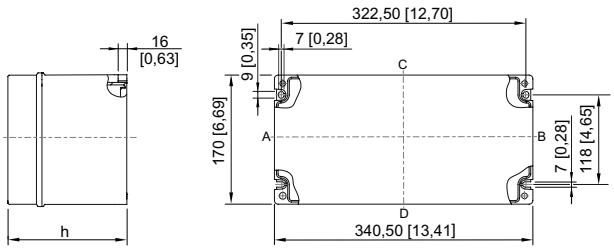

8146/.S7.
8146/.S71: h = 91 mm
8146/.S73: h = 150 mm

Maximum Number of Mountable Cable Glands Series 8161

Attention:
The maximum number of cable glands which can be mounted in the enclosure walls depends on the position of the installed mounting rails and components.

Cable gland | Enclosure size



8146/.031



Size	without flange A/B	without flange C/D
M16 x 1.5	3	4
M20 x 1.5	2	2
M25 x 1.5	1	2
M32 x 1.5	1	1
M40 x 1.5	-	1
M50 x 1.5	-	-

8146/.041



Size	without flange A/B	without flange C/D
M16 x 1.5	5	7
M20 x 1.5	2	5
M25 x 1.5	2	3
M32 x 1.5	1	2
M40 x 1.5	1	1
M50 x 1.5	-	-

8146/.241/.242



Size	without flange A/B	without flange C/D	with flange A/B	with flange C/D
M16 x 1.5	5	10	-	7
M20 x 1.5	3	7	-	3
M25 x 1.5	2	6	-	3
M32 x 1.5	1	3	-	2
M40 x 1.5	1	2	-	2
M50 x 1.5	1	2	-	-

8146/.051/.052



Size	without flange A/B	without flange C/D	with flange A/B	with flange C/D
M16 x 1.5	6	8	-	7
M20 x 1.5	4	6	-	3
M25 x 1.5	3	4	-	3
M32 x 1.5	2	2	-	2
M40 x 1.5	1	2	-	2
M50 x 1.5	-	-	-	-

8146/.061/.062

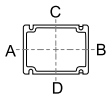

Size	without flange A/B	without flange C/D	with flange A/B	with flange C/D
M16 x 1.5	8	10	7	7
M20 x 1.5	6	7	3	3
M25 x 1.5	4	5	3	3
M32 x 1.5	2	3	2	2
M40 x 1.5	2	2	2	2
M50 x 1.5	-	-	-	-

8146/.071/.072

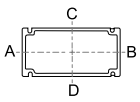

Size	without flange A/B	without flange C/D	with flange A/B	with flange C/D
M16 x 1.5	8	18	7	14
M20 x 1.5	6	14	3	6
M25 x 1.5	4	9	3	6
M32 x 1.5	2	6	2	4
M40 x 1.5	2	4	2	4
M50 x 1.5	-	1	-	-



8146/.073/.075

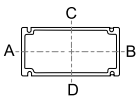

Size	without flange A/B	without flange C/D
M16 x 1.5	20	43
M20 x 1.5	12	28
M25 x 1.5	9	20
M32 x 1.5	5	12
M40 x 1.5	4	8
M50 x 1.5	2	5
M63 x 1.5	1	3

8146/.S71

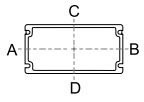

Size	without flange A/B	without flange C/D	with flange A/B	with flange C/D
M16 x 1.5	6	20	-	14
M20 x 1.5	4	16	-	6
M25 x 1.5	3	10	-	6
M32 x 1.5	2	7	-	4
M40 x 1.5	1	5	-	4
M50 x 1.5	-	-	-	-
M63 x 1.5	-	-	-	-

8146/.S73

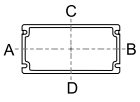

Size	without flange A/B	without flange C/D	with flange A/B	with flange C/D
M16 x 1.5	13	50	-	32
M20 x 1.5	8	32	-	19
M25 x 1.5	7	23	-	14
M32 x 1.5	4	13	-	10
M40 x 1.5	2	9	-	5
M50 x 1.5	1	5	-	3
M63 x 1.5	1	3		2

8146/.081/.082

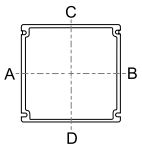

Size	without flange A/B	without flange C/D	with flange A/B	with flange C/D
M16 x 1.5	18	20	14	14
M20 x 1.5	14	16	6	6
M25 x 1.5	9	10	6	6
M32 x 1.5	6	7	4	4
M40 x 1.5	4	5	4	4
M50 x 1.5	-	-	-	-
M63 x 1.5	-	-	-	-



8146/.083/.085/.086

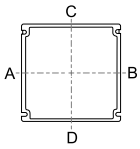

Size	without flange A/B	without flange C/D
M16 x 1.5	43	50
M20 x 1.5	28	32
M25 x 1.5	20	23
M32 x 1.5	12	13
M40 x 1.5	8	9
M50 x 1.5	5	5
M63 x 1.5	3	3

8146/.091/.092

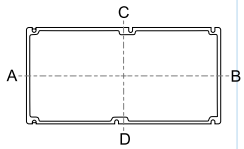

Size	without flange A/B	without flange C/D	with flange A/B	with flange C/D
M16 x 1.5	20	36	14	28
M20 x 1.5	16	29	6	12
M25 x 1.5	10	17	6	12
M32 x 1.5	7	12	4	8
M40 x 1.5	5	9	4	8
M50 x 1.5	-	-	-	-
M63 x 1.5	-	-	-	-

8146/.093/.095

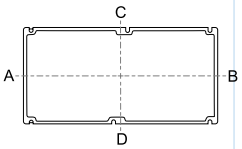

Size	without flange A/B	without flange C/D	with flange A/B	with flange C/D
M16 x 1.5	50	90	32	64
M20 x 1.5	32	58	19	38
M25 x 1.5	23	44	14	28
M32 x 1.5	13	26	10	20
M40 x 1.5	9	18	5	10
M50 x 1.5	5	7	3	6
M63 x 1.5	3	6	2	4

E3

Terminal Boxes Ex e

Series 8150/1 made of Stainless Steel



- Resistant Ex e terminal boxes made from stainless steel, degree of protection IP66, external earth connection M8
- Version as screw-on cover or hinge cover with sash locks
- Equipped as required

WebCode 8150A

R. STAHL Series 8150 Ex e terminal boxes are made of brushed stainless steel (1.4301, AISI 304 or 1.4404, AISI 316L) and are particularly resistant. The optimised design and the circumferential protection channel on the cover opening and the silicone seal suitable for the most extreme temperature ranges make the enclosure usable worldwide. Various optional accessories are available.

	IECEx / ATEX					
Zone	0	1	2	20	21	22
Installation in		•	•		•	•

E3

Selection Table

Product Description Enclosure material		Ex e terminal box 1.4404 stainless steel, (AISI 316L), brush finished							
Figure	Product Type	Dimensions (WxHxD)	Type of terminals 1	Terminal rail	Max. no. of terminals 2.5 mm²	Art. No.	Listprice €	PS	Weight kg
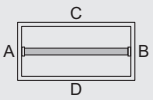	8150/1-0727-0360-150-3311	727 x 360 x 150 mm	1 x Phoenix UT 2-conductor, 2.5 mm², grey	35 x 672 mm (1x)	114	275140	908.00	10	12.000
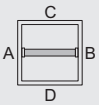	8150/1-0400-0400-150-3311	400 x 400 x 150 mm	1 x Phoenix UT 2-conductor, 2.5 mm², grey	35 x 358 mm (1x)	63	275139	633.00	10	8.000
	8150/1-0400-0300-150-3311	400 x 300 x 150 mm	1 x Phoenix UT 2-conductor, 2.5 mm², grey	35 x 358 mm (1x)	63	275138	597.00	10	7.235
	8150/1-0360-0360-091-3311	360 x 360 x 91 mm	1 x Phoenix UT 2-conductor, 2.5 mm², grey	35 x 301 mm (1x)	52	275137	592.00	10	4.266
	8150/1-0360-0176-091-3311	360 x 176.5 x 91 mm	1 x Phoenix UT 2-conductor, 2.5 mm², grey	35 x 301 mm (1x)	52	275136	393.00	10	3.748
	8150/1-0300-0200-150-3311	300 x 200 x 150 mm	1 x Phoenix UT 2-conductor, 2.5 mm², grey	35 x 258 mm (1x)	43	275135	388.00	10	4.282
	8150/1-0236-0176-091-3311	236.5 x 176.5 x 91 mm	1 x Phoenix UT 2-conductor, 2.5 mm², grey	35 x 189 mm (1x)	27	275134	357.00	10	3.091

Selection Table

Product Description Enclosure material		Ex e terminal box 1.4404 stainless steel, (AISI 316L), brush finished							
Figure	Product Type	Dimensions (WxHxD)	Type of terminals 1	Terminal rail	Max. no. of terminals 2.5 mm²	Art. No.	Listprice €	PS	Weight kg
	8150/1-0176-0176-091-3311	176.5 x 176.5 x 91 mm	1 x Phoenix UT 2-conductor, 2.5 mm², grey	35 x 133 mm (1x)	19	275133	312.00	10	2.540
	8150/1-0176-0116-091-3311	176.5 x 116 x 91 mm	1 x Phoenix UT 2-conductor, 2.5 mm², grey	35 x 133 mm (1x)	19	275132	306.00	10	2.250

The enclosures are equipped with mounting rails and 1 terminal block of the specified type.
Hinges can be ordered as accessories.

Technical Data

Explosion Protection	
IECEx gas explosion protection	Ex eb IIC T6/T5 Gb
IECEx dust explosion protection	Ex tb IIIC T80 °C ... T95 °C Db
ATEX gas explosion protection	II 2 G Ex eb IIC T6/T5 Gb
ATEX dust explosion protection	II 2 D Ex tb IIIC T80 °C ... T95 °C Db
EAC gas explosion protection	1Ex e d ia mb IIC T6...T3 Gb X
EAC dust explosion protection	Ex tb IIIC T80°...T135°C Db X
Certificates	ATEX (PTB), Brazil (ULB), Canada (UL), China (NEPSI), EAC (LPE), IECEx (PTB), India (PESO), Korea (KGS), Taiwan (ITRI), USA (UL)
Notes	CCC certificate available from 2021 onward
Ship approval	ABS, DNVGL
Notes	Product label may vary. Series devices have certification according to ATEX and IECEX.
Electrical Data	
Rated operational voltage AC	690 V
Notes	depend on the terminal type used and the explosion protected components
Ambient Conditions	
Ambient temperature	-60 °C ... +40 °C (T6) -60 °C ... +55 °C (T5)
Mechanical Data	
Degree of protection IP (IEC 60529)	IP66
External protective conductor connection	M8
Silicone-free	No
Connection cross-section	2.5 mm²
Cover	Screw-on cover
Material note	special version on request
Components	
Notes	Please refer to the manufactuerer's terminal data, e. g. the tightening torque

Accessories

Figure	Description	Art. No.	Listprice €	PS	Weight kg
Assembly kit screw hinge					
	Retrofittable hinge for enclosure up to max. 400 x 400 mm	275739	72.00	Z1	0.066

Dimensional Drawings (All Dimensions in mm [inches]) – Subject to Alterations

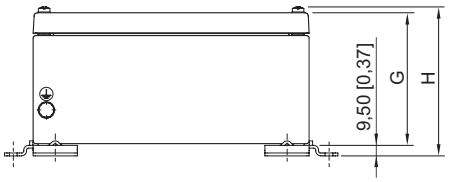

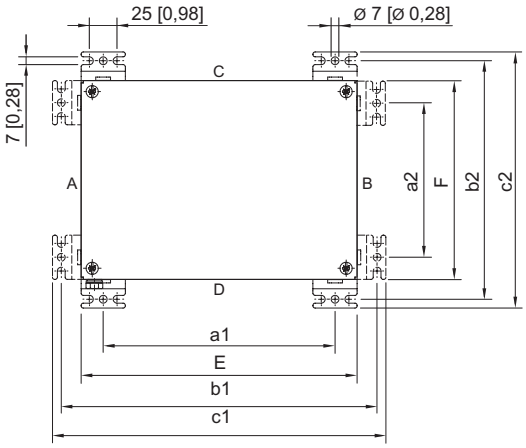

	Width	Height	Depth	Total depth	Fixing dimensions					
Type	E	F	G	H	a1	a2	b1	b2	c1	c2
8150/.-0176-0116-091-..1.	176.5 [6.95]	116.5 [4.59]	91 [3.58]	106 [4.17]	136 [5.35]	76 [2.99]	212 [8.35]	152 [5.98]	228 [8.98]	168 [6.61]
8150/.-0176-0176-091-..1.	176.5 [6.95]	176.5 [6.95]	91 [3.58]	106 [4.17]	136 [5.35]	136 [5.35]	212 [8.35]	212 [8.35]	228 [8.98]	228 [8.98]
8150/.-0236-0176-091-..1.	236.5 [9.31]	176.5 [6.95]	91 [3.58]	106 [4.17]	196 [7.72]	136 [5.35]	272 [10.71]	212 [8.35]	288 [11.34]	228 [8.98]
8150/.-0300-0200-150-..1.	300 [11.81]	200 [7.87]	150 [5.91]	165 [6.50]	260 [10.24]	160 [6.30]	336 [13.23]	236 [9.29]	352 [13.86]	252 [9.92]
8150/.-0360-0176-091-..1.	360 [14.17]	176.5 [6.95]	91 [3.58]	106 [4.17]	320 [12.60]	136 [5.35]	396 [15.59]	212 [8.35]	412 [16.22]	228 [8.98]
8150/.-0360-0360-091-..1.	360 [14.17]	360 [14.17]	91 [3.58]	106 [4.17]	320 [12.60]	320 [12.60]	396 [15.59]	396 [15.59]	412 [16.22]	412 [16.22]
8150/.-0400-0300-150-..1.	400 [15.75]	300 [11.81]	150 [5.91]	165 [6.50]	360 [14.17]	260 [10.24]	436 [17.17]	336 [13.23]	452 [17.80]	352 [13.86]
8150/.-0400-0400-150-..1.	400 [15.75]	400 [15.75]	150 [5.91]	165 [6.50]	360 [14.17]	360 [14.17]	436 [17.17]	436 [17.17]	452 [17.80]	452 [17.80]
8150/.-0600-0400-150-..1.	600 [23.62]	400 [15.75]	150 [5.91]	165 [6.50]	560 [22.05]	360 [14.17]	636 [25.04]	436 [17.17]	652 [25.67]	452 [17.80]
8150/.-0727-0360-150-..1.	727 [28.62]	360 [14.17]	150 [5.91]	165 [6.50]	687 [27.05]	320 [12.60]	763 [30.04]	398 [15.67]	779 [30.67]	412 [16.22]

Note: The attachment brackets (2 pieces) are included in an unmounted state.
Additional enclosures are available on request.

Maximum Number of Mountable Cable Glands Series 8161

Attention:
The maximum number of cable glands which can be mounted in the enclosure walls depends on the position of the installed mounting rails and components.

Cable gland | Enclosure size



8150/.-0176-116-091-.3.1

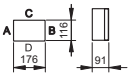

	without flange				with flange		
Size	A	B	C	D	A/B	C/D	
M16 x 1.5	6	6	12	12	-	-	
M20 x 1.5	4	4	8	8	-	-	
M25 x 1.5	2	2	4	4	-	-	
M32 x 1.5	1	1	3	3	-	-	
M40 x 1.5	1	1	2	2	-	-	
M50 x 1.5	-	-	-	-	-	-	
M63 x 1.5	-	-	-	-	-	-	

8150/.-0176-0176-091-.3.1

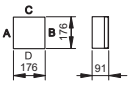

	without flange				with flange		
Size	A	B	C	D	A/B	C/D	
M16 x 1.5	11	11	12	12	-	-	
M20 x 1.5	8	8	8	8	-	-	
M25 x 1.5	4	4	4	4	-	-	
M32 x 1.5	3	3	3	3	-	-	
M40 x 1.5	2	2	2	2	-	-	
M50 x 1.5	-	-	-	-	-	-	
M63 x 1.5	-	-	-	-	-	-	

8150/.0236-0176-091-.3.1

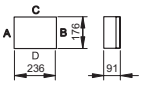

	without flange				with flange		
Size	A	B	C	D	A/B	C/D	
M16 x 1.5	11	11	14	14	-	7	
M20 x 1.5	8	8	11	11	-	3	
M25 x 1.5	4	4	5	5	-	3	
M32 x 1.5	3	3	4	4	-	2	
M40 x 1.5	2	2	3	3	-	2	
M50 x 1.5	-	-	-	-	-	-	
M63 x 1.5	-	-	-	-	-	-	

8150/.0300-0200-150-.3.1

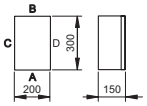

	without flange				with flange		
Size	A	B	C	D	A/B	C/D	
M16 x 1.5	33	33	54	54	-	-	
M20 x 1.5	20	20	34	34	-	-	
M25 x 1.5	12	12	21	21	-	-	
M32 x 1.5	7	7	16	16	-	-	
M40 x 1.5	5	5	8	8	-	-	
M50 x 1.5	3	3	5	5	-	-	
M63 x 1.5	2	2	3	3	-	-	



8150/.-0360-0176-091-.3.1

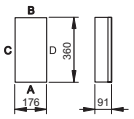

	without flange				with flange		
Size	A	B	C	D	A/B	C/D	
M16 x 1.5	11	11	27	27	-	9	
M20 x 1.5	8	8	20	20	-	6	
M25 x 1.5	4	4	10	10	-	6	
M32 x 1.5	3	3	7	7	-	-	
M40 x 1.5	2	2	5	5	-	-	
M50 x 1.5	-	-	-	-	-	-	
M63 x 1.5	-	-	-	-	-	-	

8150/.-0360-0360-091-.3.1

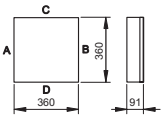

	without flange				with flange		
Size	A	B	C	D	A/B	C/D	
M16 x 1.5	27	27	27	27	-	9	
M20 x 1.5	20	20	20	20	-	6	
M25 x 1.5	10	10	10	10	-	6	
M32 x 1.5	7	7	7	7	-	-	
M40 x 1.5	5	5	5	5	-	-	
M50 x 1.5	-	-	-	-	-	-	
M63 x 1.5	-	-	-	-	-	-	

8150/.-0400-0300-150-.3.1

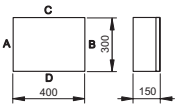

	without flange				with flange		
Size	A	B	C	D	A/B	C/D	
M16 x 1.5	54	54	74	74	on request	28	
M20 x 1.5	34	34	48	48		18	
M25 x 1.5	21	21	30	30		13	
M32 x 1.5	15	15	22	22		9	
M40 x 1.5	8	8	11	11		5	
M50 x 1.5	5	5	7	7		3	
M63 x 1.5	3	3	5	5		3	

8150/.-0400-0400-150-.3.1

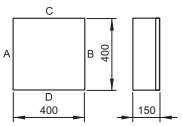

	without flange				with flange		
Size	A	B	C	D	A/B	C/D	
M16 x 1.5	74	74	74	74	28	28	
M20 x 1.5	48	48	48	48	18	18	
M25 x 1.5	29	29	30	30	13	13	
M32 x 1.5	21	21	22	22	9	9	
M40 x 1.5	11	11	11	11	5	5	
M50 x 1.5	7	7	7	7	3	3	
M63 x 1.5	5	5	5	5	3	3	



8150/.-0600-0400-150-.3.1

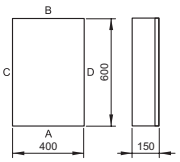

	without flange				with flange		
Size	A	B	C	D	A/B	C/D	
M16 x 1.5	74	74	117	117	28	47	
M20 x 1.5	48	48	74	74	18	31	
M25 x 1.5	29	29	46	46	13	21	
M32 x 1.5	21	21	33	33	9	15	
M40 x 1.5	11	11	18	18	5	8	
M50 x 1.5	7	7	11	11	3	5	
M63 x 1.5	5	5	7	7	3	5	

8150/.-0727-0360-150-.3.1

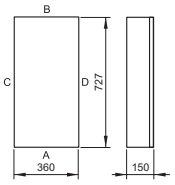

	without flange				with flange	
Size	A	B	C	D	A/B	C/D
M16 x 1.5	65	65	117	117	on request	on request
M20 x 1.5	42	42	74	74		
M25 x 1.5	26	26	46	46		
M32 x 1.5	18	18	33	33		
M40 x 1.5	10	10	18	18		
M50 x 1.5	6	6	11	11		
M63 x 1.5	4	4	7	7		

E3

Terminal Boxes Ex i

Series 8150/2 made of Stainless Steel



- Resistant Ex i terminal boxes made from stainless steel, degree of protection IP66, external earth connection M8
- Version as screw-on cover or hinge cover with sash locks
- Equipped as required

WebCode 8150H

R. STAHL Series 8150 Ex i terminal boxes are made of brushed stainless steel (1.4301, AISI 304 or 1.4404, AISI 316L) and are particularly resistant. The optimised design and the circumferential protection channel on the cover opening and the silicone seal suitable for the most extreme temperature ranges make the enclosure usable worldwide. Various optional accessories are available.

	IECEx / ATEX					
Zone	0	1	2	20	21	22
Installation in		•	•		•	•

E3

Selection Table

Product Description Enclosure material		Ex i terminal box 1.4301 stainless steel, (AISI 304), brush finished							
Figure	Product Type	Dimensions (WxHxD)	Type of terminals 1	Terminal rail	Max. no. of terminals 2.5 mm²	Art. No.	Listprice €	PS	Weight kg
	8150/2-0360-0360-150-2311	360 x 360 x 150 mm	1 x Phoenix UT 2-conductor, 2.5 mm², blue	35 x 301 mm (1x)	52	275143	618.00	10	4.266
	8150/2-0360-0176-150-2311	360 x 176.5 x 150 mm	1 x Phoenix UT 2-conductor, 2.5 mm², blue	35 x 301 mm (1x)	52	275146	449.00	10	3.748
	8150/2-0176-0116-091-2311	176.5 x 116 x 91 mm	1 x Phoenix UT 2-conductor, 2.5 mm², blue	35 x 133 mm (1x)	19	275141	337.00	10	2.250
Product Description Enclosure material		Ex i terminal box 1.4404 stainless steel, (AISI 316L), brush finished							
Figure	Product Type	Dimensions (WxHxD)	Type of terminals 1	Terminal rail	Max. no. of terminals 2.5 mm²	Art. No.	Listprice €	PS	Weight kg
	8150/2-0236-0176-091-3311	236.5 x 176.5 x 91 mm	1 x Phoenix UT 2-conductor, 2.5 mm², blue	35 x 189 mm (1x)	27	275147	414.00	10	3.091
	8150/2-0176-0116-091-3311	176.5 x 116 x 91 mm	1 x Phoenix UT 2-conductor, 2.5 mm², blue	35 x 133 mm (1x)	19	275148	286.00	10	2.250

The enclosures are equipped with mounting rails and 1 terminal block of the specified type.
Hinges can be ordered as accessories.

Technical Data	
Explosion Protection	
IECEx gas explosion protection	Ex ia ib IIC T6 Gb
IECEx dust explosion protection	Ex tb IIIC T80 °C Db
ATEX gas explosion protection	II 2 G Ex ia ib IIC T6 Gb
ATEX dust explosion protection	II 2 D Ex tb IIIC T80 °C Db
EAC gas explosion protection	1Ex ia IIC T6...T5 Gb X
EAC dust explosion protection	Ex tb IIIC T80°...T95°C Db X
Certificates	ATEX (PTB), Brazil (ULB), China (NEPSI), EAC (LPE), IECEx (PTB), India (PESO), Korea (KGS), Taiwan (ITRI)
Notes	CCC certificate available from 2021 onward
Ship approval	DNVGL
Notes	Product label may vary. Series devices have certification according to ATEX and IECEX.
Electrical Data	
Rated operational voltage AC	60 V
Notes	depend on the terminal type used and the explosion protected components
Ambient Conditions	
Ambient temperature	-60 °C ... +75 °C
Mechanical Data	
Degree of protection IP (IEC 60529)	IP66
External protective conductor connection	M8
Silicone-free	No
Connection cross-section	2.5 mm²
Cover	Screw-on cover
Material note	special version on request
Components	
Notes	Please refer to the manufactuerer's terminal data, e. g. the tightening torque

E3

Accessories

Figure	Description	Art. No.	Listprice €	PS	Weight kg
Assembly kit screw hinge					
	Retrofittable hinge for enclosure up to max. 400 x 400 mm	275739	72.00	Z1	0.066

Terminal Boxes / Control Stations

Series 8150 Dimensional Drawings

Dimensional Drawings (All Dimensions in mm [inches]) – Subject to Alterations

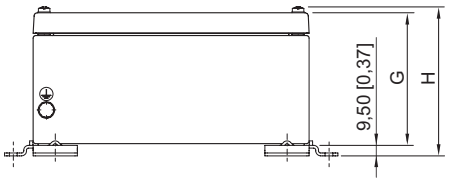

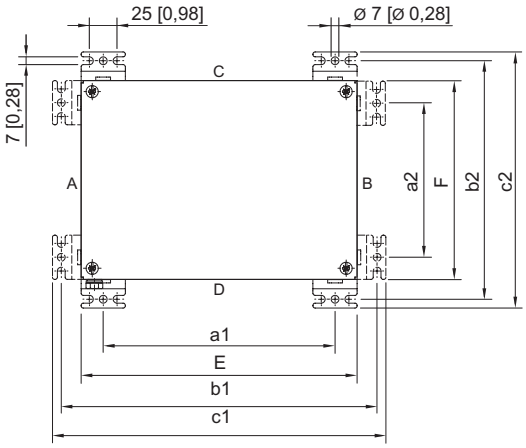

	Width	Height	Depth	Total depth	Fixing dimensions					
Type	E	F	G	H	a1	a2	b1	b2	c1	c2
8150/.-0176-0116-091-..1.	176.5 [6.95]	116.5 [4.59]	91 [3.58]	106 [4.17]	136 [5.35]	76 [2.99]	212 [8.35]	152 [5.98]	228 [8.98]	168 [6.61]
8150/.-0176-0176-091-..1.	176.5 [6.95]	176.5 [6.95]	91 [3.58]	106 [4.17]	136 [5.35]	136 [5.35]	212 [8.35]	212 [8.35]	228 [8.98]	228 [8.98]
8150/.-0236-0176-091-..1.	236.5 [9.31]	176.5 [6.95]	91 [3.58]	106 [4.17]	196 [7.72]	136 [5.35]	272 [10.71]	212 [8.35]	288 [11.34]	228 [8.98]
8150/.-0300-0200-150-..1.	300 [11.81]	200 [7.87]	150 [5.91]	165 [6.50]	260 [10.24]	160 [6.30]	336 [13.23]	236 [9.29]	352 [13.86]	252 [9.92]
8150/.-0360-0176-091-..1.	360 [14.17]	176.5 [6.95]	91 [3.58]	106 [4.17]	320 [12.60]	136 [5.35]	396 [15.59]	212 [8.35]	412 [16.22]	228 [8.98]
8150/.-0360-0360-091-..1.	360 [14.17]	360 [14.17]	91 [3.58]	106 [4.17]	320 [12.60]	320 [12.60]	396 [15.59]	396 [15.59]	412 [16.22]	412 [16.22]
8150/.-0400-0300-150-..1.	400 [15.75]	300 [11.81]	150 [5.91]	165 [6.50]	360 [14.17]	260 [10.24]	436 [17.17]	336 [13.23]	452 [17.80]	352 [13.86]
8150/.-0400-0400-150-..1.	400 [15.75]	400 [15.75]	150 [5.91]	165 [6.50]	360 [14.17]	360 [14.17]	436 [17.17]	436 [17.17]	452 [17.80]	452 [17.80]
8150/.-0600-0400-150-..1.	600 [23.62]	400 [15.75]	150 [5.91]	165 [6.50]	560 [22.05]	360 [14.17]	636 [25.04]	436 [17.17]	652 [25.67]	452 [17.80]
8150/.-0727-0360-150-..1.	727 [28.62]	360 [14.17]	150 [5.91]	165 [6.50]	687 [27.05]	320 [12.60]	763 [30.04]	398 [15.67]	779 [30.67]	412 [16.22]

Note: The attachment brackets (2 pieces) are included in an unmounted state.
Additional enclosures are available on request.

Maximum Number of Mountable Cable Glands Series 8161

Attention:
The maximum number of cable glands which can be mounted in the enclosure walls depends on the position of the installed mounting rails and components.

Cable gland | Enclosure size



8150/.-0176-116-091-.3.1

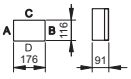

	without flange				with flange		Size
Size	A	B	C	D	A/B	C/D	
M16 x 1.5	6	6	12	12	-	-	
M20 x 1.5	4	4	8	8	-	-	
M25 x 1.5	2	2	4	4	-	-	
M32 x 1.5	1	1	3	3	-	-	
M40 x 1.5	1	1	2	2	-	-	
M50 x 1.5	-	-	-	-	-	-	
M63 x 1.5	-	-	-	-	-	-	

8150/.-0176-0176-091-.3.1

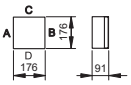

	without flange				with flange		Size
Size	A	B	C	D	A/B	C/D	
M16 x 1.5	11	11	12	12	-	-	
M20 x 1.5	8	8	8	8	-	-	
M25 x 1.5	4	4	4	4	-	-	
M32 x 1.5	3	3	3	3	-	-	
M40 x 1.5	2	2	2	2	-	-	
M50 x 1.5	-	-	-	-	-	-	
M63 x 1.5	-	-	-	-	-	-	

8150/.0236-0176-091-.3.1

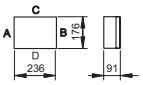

	without flange				with flange		Size
Size	A	B	C	D	A/B	C/D	
M16 x 1.5	11	11	14	14	-	7	
M20 x 1.5	8	8	11	11	-	3	
M25 x 1.5	4	4	5	5	-	3	
M32 x 1.5	3	3	4	4	-	2	
M40 x 1.5	2	2	3	3	-	2	
M50 x 1.5	-	-	-	-	-	-	
M63 x 1.5	-	-	-	-	-	-	

8150/.0300-0200-150-.3.1

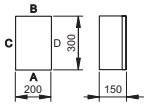

	without flange				with flange		Size
Size	A	B	C	D	A/B	C/D	
M16 x 1.5	33	33	54	54	-	-	
M20 x 1.5	20	20	34	34	-	-	
M25 x 1.5	12	12	21	21	-	-	
M32 x 1.5	7	7	16	16	-	-	
M40 x 1.5	5	5	8	8	-	-	
M50 x 1.5	3	3	5	5	-	-	
M63 x 1.5	2	2	3	3	-	-	



8150/.-0360-0176-091-.3.1

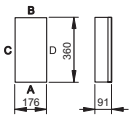

	without flange				with flange		Size
Size	A	B	C	D	A/B	C/D	
M16 x 1.5	11	11	27	27	-	9	
M20 x 1.5	8	8	20	20	-	6	
M25 x 1.5	4	4	10	10	-	6	
M32 x 1.5	3	3	7	7	-	-	
M40 x 1.5	2	2	5	5	-	-	
M50 x 1.5	-	-	-	-	-	-	
M63 x 1.5	-	-	-	-	-	-	

8150/.-0360-0360-091-.3.1

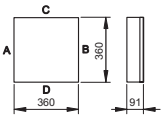

	without flange				with flange		Size
Size	A	B	C	D	A/B	C/D	
M16 x 1.5	27	27	27	27	-	9	
M20 x 1.5	20	20	20	20	-	6	
M25 x 1.5	10	10	10	10	-	6	
M32 x 1.5	7	7	7	7	-	-	
M40 x 1.5	5	5	5	5	-	-	
M50 x 1.5	-	-	-	-	-	-	
M63 x 1.5	-	-	-	-	-	-	

8150/.-0400-0300-150-.3.1

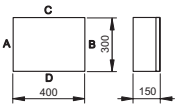

	without flange				with flange		Size
Size	A	B	C	D	A/B	C/D	
M16 x 1.5	54	54	74	74	on request	28	
M20 x 1.5	34	34	48	48		18	
M25 x 1.5	21	21	30	30		13	
M32 x 1.5	15	15	22	22		9	
M40 x 1.5	8	8	11	11		5	
M50 x 1.5	5	5	7	7		3	
M63 x 1.5	3	3	5	5		3	

8150/.-0400-0400-150-.3.1

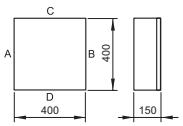

	without flange				with flange		Size
Size	A	B	C	D	A/B	C/D	
M16 x 1.5	74	74	74	74	28	28	
M20 x 1.5	48	48	48	48	18	18	
M25 x 1.5	29	29	30	30	13	13	
M32 x 1.5	21	21	22	22	9	9	
M40 x 1.5	11	11	11	11	5	5	
M50 x 1.5	7	7	7	7	3	3	
M63 x 1.5	5	5	5	5	3	3	



8150/.-0600-0400-150-.3.1

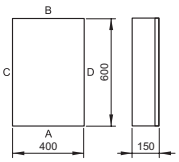

	without flange				with flange		Size
Size	A	B	C	D	A/B	C/D	
M16 x 1.5	74	74	117	117	28	47	
M20 x 1.5	48	48	74	74	18	31	
M25 x 1.5	29	29	46	46	13	21	
M32 x 1.5	21	21	33	33	9	15	
M40 x 1.5	11	11	18	18	5	8	
M50 x 1.5	7	7	11	11	3	5	
M63 x 1.5	5	5	7	7	3	5	

8150/.-0727-0360-150-.3.1

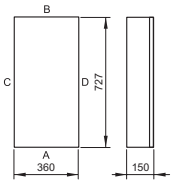

	without flange				with flange		Size
Size	A	B	C	D	A/B	C/D	
M16 x 1.5	65	65	117	117	on request	on request	
M20 x 1.5	42	42	74	74			
M25 x 1.5	26	26	46	46			
M32 x 1.5	18	18	33	33			
M40 x 1.5	10	10	18	18			
M50 x 1.5	6	6	11	11			
M63 x 1.5	4	4	7	7			

E3

Terminal Boxes

Series 8252/1 made of Aluminium, Ex d



- Ex d enclosure in 3 sizes, pre-mounted with threads and DIN rails for standard terminals
- Enclosure holes for quick and easy mounting
- Also suitable for versions with electronic components and relays

WebCode 8252A

The new R. STAHL Series 8252/1 Ex d terminal boxes are made of seawater-resistant, copper-free aluminium casting alloy. The DIN rail is pre-mounted; in addition, the enclosures can be configured flexibly: Three sizes, 3, 4 or 5 hubs, metric or NPT thread – and always individually equipped, also with electronic components and relays.

	IECEx / ATEX					
Zone	0	1	2	20	21	22
Installation in		•	•		•	•

Selection Table

Enclosure size Dimensions (WxHxD)		2 106 x 106 x 76 mm								
Figure	Floor openings (BASE)	Right openings (0°)	Top openings (90°)	Left openings (180°)	Bottom openings (270°)	Product Type	Art. No.	Listprice €	PS	Weight kg
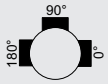	Without entry & without adaptor	M20	M20	M20	Without entry & without adaptor	8252/12-0BBB0-111	215181	34.80	13	0.590
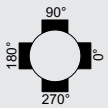	Without entry & without adaptor	M20	M20	M20	M20	8252/12-0BBBB-111	215186	41.80	13	0.640
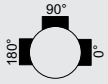	Without entry & without adaptor	NPT1	NPT1	NPT1	Without entry & without adaptor	8252/12-0JJJ0-111	215145	34.80	13	0.530
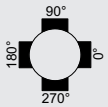	Without entry & without adaptor	NPT1	NPT1	NPT1	NPT1	8252/12-0JJJJ-111	215150	41.80	13	0.550
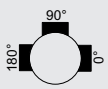	Without entry & without adaptor	NPT1/2	NPT1/2	NPT1/2	Without entry & without adaptor	8252/12-0HHH0-111	215143	34.80	13	0.590

Selection Table

Figure	Floor openings (BASE)	Right openings (0°)	Top openings (90°)	Left openings (180°)	Bottom openings (270°)	Product Type	Art. No.	Listprice €	PS	Weight kg
Enclosure size 2, Dimensions (WxHxD) 106 x 106 x 76 mm										
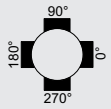	Without entry & without adaptor	NPT1/2	NPT1/2	NPT1/2	NPT1/2	8252/12-0HHHH-111	215148	41.80	13	0.640
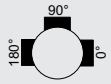	Without entry & without adaptor	NPT3/4	NPT3/4	NPT3/4	Without entry & without adaptor	8252/12-0III0-111	215144	34.80	13	0.550
Enclosure size 2, Dimensions (WxHxD) 106 x 106 x 88 mm										
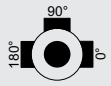	M20	M20	M20	M20	Without entry & without adaptor	8252/12-BBBB0-111	215195	39.20	13	0.650
Enclosure size 3, Dimensions (WxHxD) 120 x 120 x 99 mm										
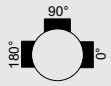	Without entry & without adaptor	M32	M32	M32	Without entry & without adaptor	8252/13-0DDD0-111	216439	49.50	13	1.020
		NPT1-1/4	NPT1-1/4	NPT1-1/4	Without entry & without adaptor	8252/13-0KKK0-111	216438	49.50	13	0.950
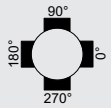	Without entry & without adaptor	NPT1-1/4	NPT1-1/4	NPT1-1/4	NPT1-1/4	8252/13-0KKKK-111	216440	56.30	13	0.900
Enclosure size 4, Dimensions (WxHxD) 156 x 156 x 115 mm										
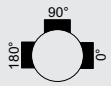	Without entry & without adaptor	NPT2	NPT2	NPT2	Without entry & without adaptor	8252/14-0MMM0-111	215147	73.70	13	1.540

Cable glands or stopping plugs must be ordered seperately.

Technical Data

Explosion Protection	
IECEx gas explosion protection	Ex d IIC T5-T6 Gb
IECEx dust explosion protection	Ex tb IIIC T80°C-95°C Db
ATEX gas explosion protection	II 2 G Ex d IIC T5-T6 Gb
ATEX dust explosion protection	II 2 D Ex tb IIIC T80°C-95°C Db
EAC gas explosion protection	1Ex d [ia Ga] IIC T6...T4 Gb X 1Ex d [ib Gb] IIC T6...T4 Gb X
EAC dust explosion protection	Ex tb IIIC T80°...T130°C Db X
Certificates	ATEX (BVS), China (NEPSI), EAC (LPE), IECEx (BVS), India (PESO)
Notes	Product label may vary. Series devices have certification according to ATEX and IECEX.

Technical Data	
Electrical Data	
Rated operational voltage AC	690 V
Rated operational current	175 A
Notes	Rated operational voltage AC and Rated operational current depending on explosion-protected built-in components used
Ambient Conditions	
Ambient temperature	-60 °C ... +70 °C
Notes	Ambient temperature depending on explosion-protected built-in components used
Mechanical Data	
Degree of protection (IP)	IP66
Degree of protection note	according to IEC/EN 60529
Enclosure material	Cast aluminium alloy, Copper-free, powder-coated
Notes	Protective conductor connection: M6 earth bolt, inside/outside on the enclosure, tightening torque: 2.8 Nm

Dimensional Drawings (All Dimensions in mm [inches]) – Subject to Alterations

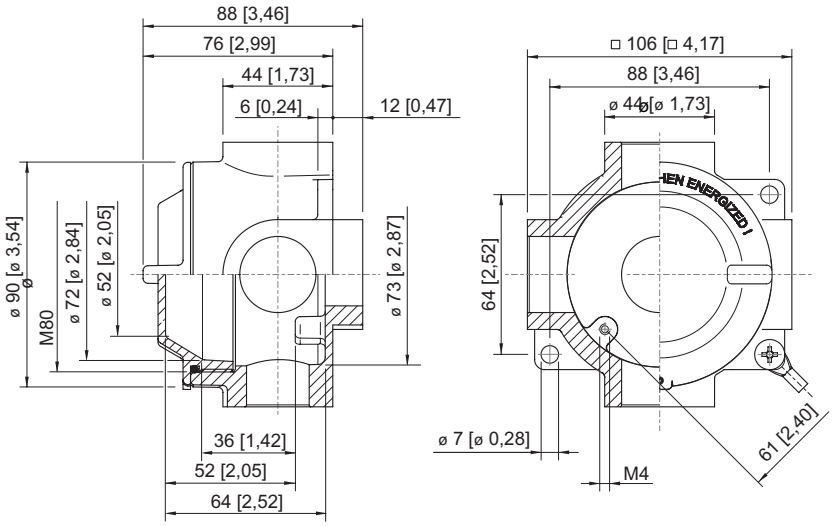

Size 2

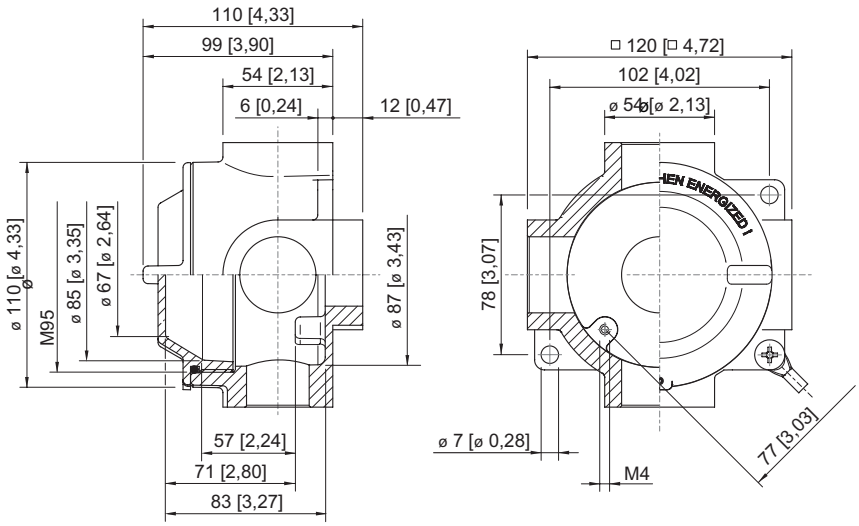

Size 3

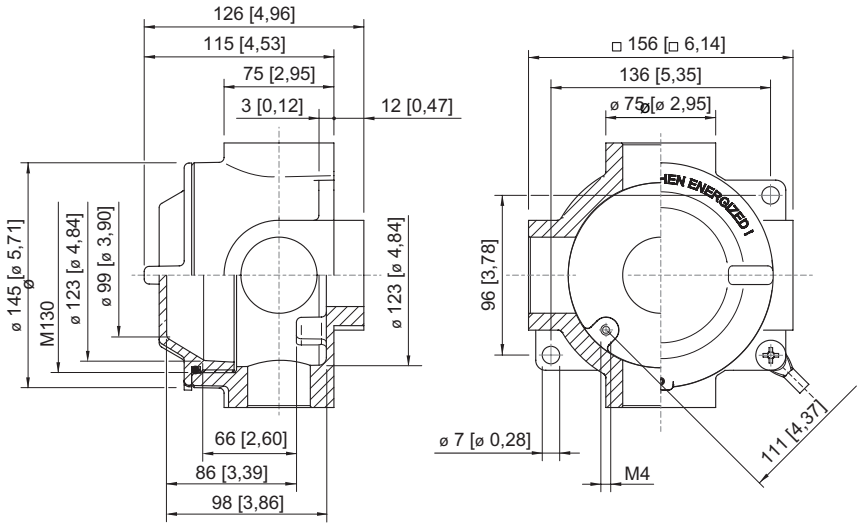

Size 4

Position of Hubs

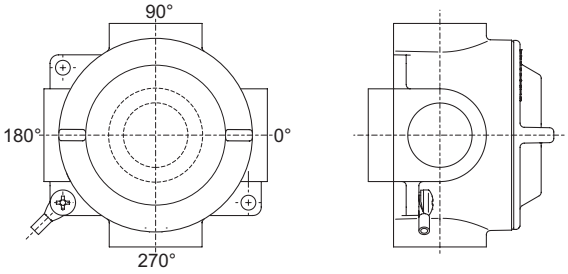

Maximum Number of Terminal Blocks that can be fitted

	MBK 2.5E	MBK 3/E-Z	MBK 5/E-Z	UT 2.5	UT 4	UT 6	UT 10	UT 16	ST 2.5	ST 4	ST 6	STTB 2.5	STTB 4
Enclosure size 2 8252/12	8	8	8	-	-	-	-	-	-	-	-	-	-
Enclosure size 3 8252/13	10	10	8	6	5	4	-	-	6	4	-	-	-
Enclosure size 4 8252/14	17	17	14	11	11	10	6	5	11	10	4	5	3

Selection Guide for Cable Glands

Selection guide: cable glands Ex d versions

Type of protection	Armouring	Material	Compound	Type
Ex d	unarmoured	Nickel - plated brass	Compound	PXSS2K
			RapidEx	PXSS2KRex
	all armouring **without** lead sheath		Compound	PX2K
			RapidEx	PX2KRex
	unarmoured		no*	TC
		Nickel - plated brass / stainless steel		A2F
	unarmoured / rigid Conduit connection	Nickel - plated brass		A2FRC
	unarmoured / flexible Conduit connection			A2FFC
	all armouring **without** lead sheath	Nickel - plated brass **with** double seal		T3CDS E1FU
	wire braid / steel tape armoured			E1FW
	single wire / steel wire armoured (SWA)			E1FX
	all armouring **without** lead sheath	Stainless steel **with** double seal		TE1FU

*For direct insertion into Ex d, we generally recommend using a barrier screw connection with Compound or RapidEx

Cable glands see Chapter E10, page 406

Note: Cable glands or stopping plugs must be ordered separately.

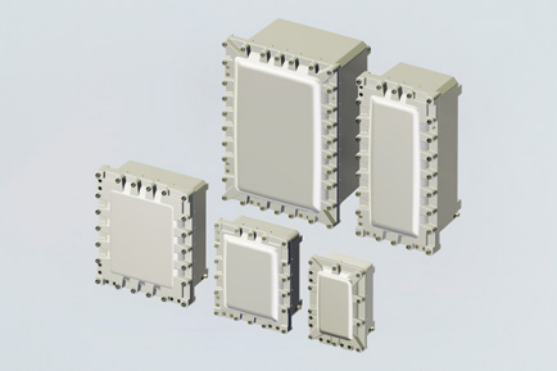

- Cost-effective single enclosure
- Light-weight construction
- Temperature range for worldwide use
- Retrofittable hinges
- Seawater-resistant aluminium
- Captive screws

WebCode **8250A**

The enclosure is used to build motor control units, control stations and terminal boxes with type of protection Ex d. It is suitable for the installation of customer-specific control panels. The enclosure allows installation and operation of arcing equipment in Zones 1, 2, 21 and 22.
For direct cable entry into the enclosures, flameproof cable glands with type of protection Ex d or threaded holes for conduit connection can be applied.

	IECEx / ATEX					
Zone	0	1	2	20	21	22
Installation in		•	•		•	•

Selection Table

Enclosure material	Cast aluminium alloy AlSi7mg0.3
Cover fixing type	With captive screws, Without hinge

Figure	Enclosure size	Inner dimensions (WxHxD)	Built-in components	Product Type	Art. No.	Listprice €	PS	Weight kg
	1	150 x 250 x 110 mm	Without	8250/0-0250-0150-110-320031	245599	247.80	10	8.220
	2	230 x 300 x 125 mm	Without	8250/0-0300-0230-125-320031	245600	394.30	10	12.650
	3	300 x 370 x 160 mm	Without	8250/0-0370-0300-160-320031	221625	675.80	10	19.250
	5	360 x 540 x 300 mm	Without	8250/0-0540-0360-300-320031	226100	1239.00	10	50.000

Empty Enclosures
Series 8250 made of Aluminium

Technical Data		
Explosion Protection		
IECEx gas explosion protection	Ex db IIB/IIB+H2 Gb	
IECEx dust explosion protection	Ex tb IIIC Db	
ATEX gas explosion protection	Ⓔx II 2 G Ex db IIB/IIB+H2 Gb	
ATEX dust explosion protection	Ⓔx II 2 D Ex tb IIIC Db	
Certificates	ATEX (BVS), EAC (STV), IECEx (BVS), India (PESO)	
Notes	Product label may vary. Series devices have certification according to ATEX and IECEX.	
Electrical Data		
Notes	Protective conductor connection:	inside/outside on the enclosure (threaded holes), M8 threaded screw, tightening torque: 12 Nm
Ambient Conditions		
Ambient temperature	-60 °C ... +70 °C (For IIB) -60 °C ... +60 °C (For IIB+H2)	
Storage temperature	-60 °C ... +80 °C	
Notes	-55 °C ... +55 °C with actuation axis, coupler, inspection window	
Mechanical Data		
Degree of protection (IP)	IP66	
Enclosure material	Cast aluminium alloy AlSi7mg0.3	
Notes	Cover lock: Wall mounting:	stainless steel socket head screw (A-80); tightening torque M8 = 15 Nm, M10 = 18 Nm using a mounting bracket or directly into the enclosure base

Accessories

Figure	Description	Art. No.	Listprice €	PS	Weight kg
Mounting plate					
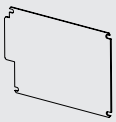	for size 3	225906	44.60	Z1	1.750
	for size 5	225908	76.30	Z1	3.900
	for size 1	224226	18.20	Z1	0.700
	for size 2	224227	24.50	Z1	0.900
Mounting rail					
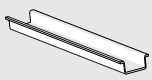	for enclosure size 3, including fastening material	225909	9.20	Z1	0.130
	for enclosure size 2, including fastening material	224229	8.10	Z1	0.110
	for enclosure size 1, including fastening material	224228	7.40	Z1	0.150
Wall mounting					
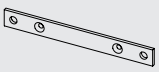	Fastening tape size 1	224231	48.30	Z1	0.900
	Fastening tape size 2	224232	52.20	Z1	1.130
	Fastening tape size 3	225911	63.60	Z1	1.400
	Fastening tape size 5	225913	77.80	Z1	1.500

Spare Parts

Figure	Description	Art. No.	Listprice €	PS	Weight kg
Hinge					
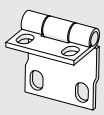	Hinge for sizes 1 to 5	224230	29.70	E1	0.126

Dimensional Drawings (All Dimensions in mm [inches]) – Subject to Alterations

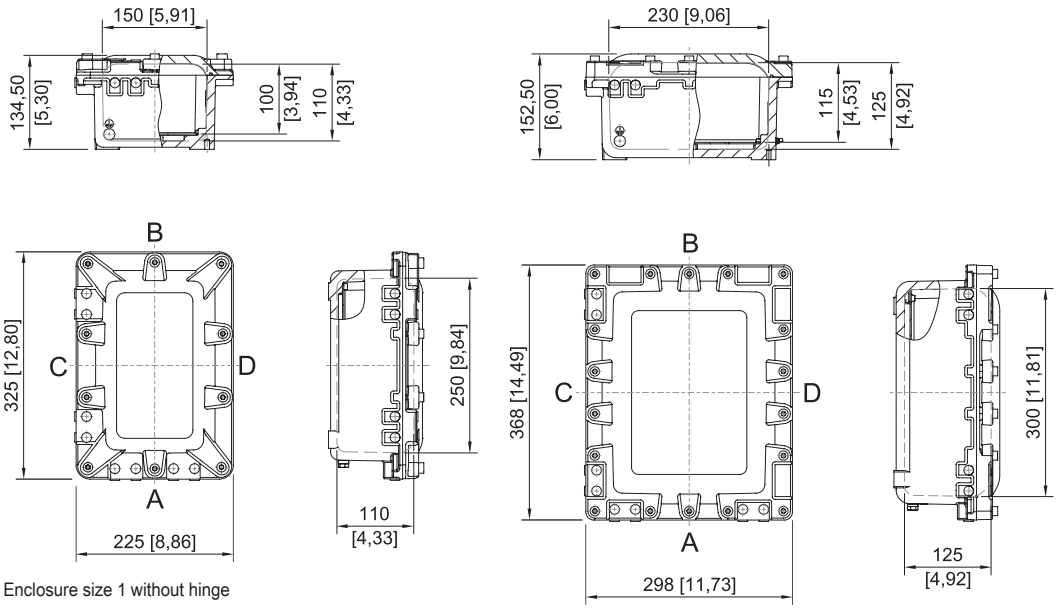

Enclosure size 1 without hinge

Enclosure size 2 without hinge

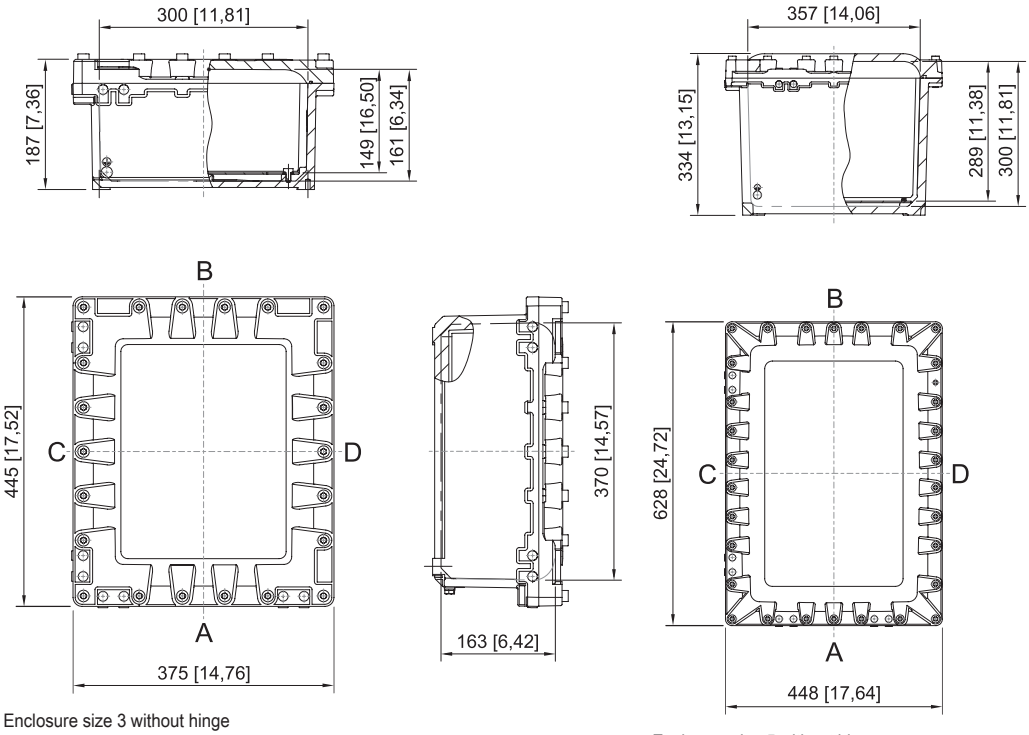

Enclosure size 3 without hinge

Enclosure size 5 without hinge

Wall-Mounting Sockets

Series 8570/11 SolConeX 16 A



- Optional: Pluggable, easily retrofittable Ex e or Ex i auxiliary contacts for control and signalling purposes
- Motor switching capacity AC-3 as per IEC/EN 60947-3
- Variants for use in the USA/Canada available on request
- Wide temperature range for use
- High mechanical impact and shock resistance
- Perfect protection against the ingress of liquids and dust
- 3D data available to download from the website

WebCode 8570A

R. STAHL Series 8570/11 SolConeX sockets for Zone 1/21 in a 3-, 4- and 5-pole version have full AC-3 switching capacity up to 16 A. The high degree of protection IP66 guarantees the highest level of protection against the penetration of dust and water in any application position. Self-cleaning lamellar contacts provide optimum contact and the plugs can be inserted and removed in the zero position quickly and easily. The load disconnect switch, with mechanical locking device and a handle that can be locked in the 0 or I position, is an additional safety feature.

	IECEx / ATEX					
Zone	0	1	2	20	21	22
Installation in		•	•		•	•

Selection Table

Product Description: Wall socket 16 A
Product variant: Standard

Figure	Detailed number of poles	Coding (clock hour position)	Rated operational voltage	Colour code	Frequency range	Product Type	Art. No.	Listprice €	PS	Weight kg
	1 P + N + PE	4	100 ... 130 V AC	Yellow	50 / 60 Hz	8570/11-304	150598▲	347.40	10	1.120
	2 P + PE	3	> 50 ... 110 V DC	Light grey	–	8570/11-303	150590	347.40	10	1.120
		6	200 ... 250 V AC	Blue	50 / 60 Hz	8570/11-306	150578▲	347.40	10	1.120
		7	480 ... 500 V AC	Black	50 / 60 Hz	8570/11-307	150586	347.40	10	1.120
	3 P + N + PE	3	220/380 V AC	Red	50 Hz	8570/11-503	218312	481.30	10	1.450
		4	57/100 ... 75/ 130 V AC	Yellow	50 / 60 Hz	8570/11-504	218313	481.30	10	1.450
		5	347/600 ... 400/ 690 V AC	Black	50 / 60 Hz	8570/11-505	150527	481.30	10	1.450
		6	200/346 ... 240/ 415 V AC	Red	50 / 60 Hz	8570/11-506	150494▲	481.30	10	1.450
		7	277/480 ... 288/ 500 V AC	Black	50 / 60 Hz	8570/11-507	150508	481.30	10	1.450
		9	120/208 ... 144/ 250 V AC	Blue	50 / 60 Hz	8570/11-509	150518	481.30	10	1.450
	3 P + PE	4	100 ... 130 V AC	Yellow	50 / 60 Hz	8570/11-404	218316	464.30	10	1.350
		5	600 ... 690 V AC	Black	50 / 60 Hz	8570/11-405	150562	464.30	10	1.350
		6	380 ... 415 V AC	Red	50 / 60 Hz	8570/11-406	150550▲	464.30	10	1.350
		7	480 ... 500 V AC	Black	50 / 60 Hz	8570/11-407	150554	464.30	10	1.350
		9	200 ... 250 V AC	Blue	50 / 60 Hz	8570/11-409	150558	464.30	10	1.350

▲ Preferred products – in stock or available at short notice

Selection Table

Product Description Product variant Auxiliary contacts			Wall socket 16 A Variants with auxiliary contact 1 (1 NO)							
Figure	Detailed number of poles	Coding (clock hour position)	Rated operational voltage	Colour code	Frequency range	Product Type	Art. No.	Listprice €	PS	Weight kg
	2 P + PE	6	200 ... 250 V AC	Blue	50 / 60 Hz	8570/11-306-S001	166609	391.00	10	1.120
	3 P + N + PE	6	200/346 ... 240/415 V AC	Red	50 / 60 Hz	8570/11-506-S001	218964	520.70	10	1.600
	3 P + PE	6	380 ... 415 V AC	Red	50 / 60 Hz	8570/11-406-S001	218960	506.80	10	1.350

Product Description Product variant			Wall socket 16 A Variants with metal earth plate for double metal insert and stopping plug							
Figure	Detailed number of poles	Coding (clock hour position)	Rated operational voltage	Colour code	Frequency range	Product Type	Art. No.	Listprice €	PS	Weight kg
	2 P + PE	6	200 ... 250 V AC	Blue	50 / 60 Hz	8570/11-306-S011	203090 ▲	391.00	10	1.120
		6	200 ... 250 V AC	Blue	50 / 60 Hz	8570/11-306-S019	214065 ▲	391.00	10	1.120
	3 P + N + PE	6	200/346 ... 240/415 V AC	Red	50 / 60 Hz	8570/11-506-S020	214067	520.70	10	1.450
	3 P + PE	6	380 ... 415 V AC	Red	50 / 60 Hz	8570/11-406-S012	203142	506.80	10	1.350
		6	380 ... 415 V AC	Red	50 / 60 Hz	8570/11-406-S020	214066	506.80	10	1.350

Variants with temperature range of -50 … +55 °C available on request; silicone is used as a sealing material

Technical Data

Variant	8570/11-...	8570/11-...-S001	8570/11-...-S011 8570/11-...-S012	8570/11-...-S019 8570/11-...-S020
Explosion Protection				
IECEx gas explosion protection	Ex db eb IIC T6 Gb	Ex db eb IIC T6 Gb	Ex db eb IIC T6 Gb	Ex db eb IIC T6 Gb
IECEx dust explosion protection	Ex tb IIIC T80 °C Db	Ex tb IIIC T80 °C Db	Ex tb IIIC T80 °C Db	Ex tb IIIC T80 °C Db
ATEX gas explosion protection	Ⓔx II 2 G Ex db eb IIC T6 Gb	Ⓔx II 2 G Ex db eb IIC T6 Gb	Ⓔx II 2 G Ex db eb IIC T6 Gb	Ⓔx II 2 G Ex db eb IIC T6 Gb
ATEX dust explosion protection	Ⓔx II 2 D Ex tb IIIC T80 °C Db	Ⓔx II 2 D Ex tb IIIC T80 °C Db	Ⓔx II 2 D Ex tb IIIC T80 °C Db	Ⓔx II 2 D Ex tb IIIC T80 °C Db
Certificates	ATEX (PTB), Brazil (ULB), EAC (CCVE), IECEx (PTB), India (PESO), Korea (KGS), Taiwan (ITRI)	ATEX (PTB), Brazil (ULB), EAC (CCVE), IECEx (PTB), India (PESO), Korea (KGS), Taiwan (ITRI)	ATEX (PTB), Brazil (ULB), EAC (CCVE), IECEx (PTB), India (PESO), Korea (KGS), Taiwan (ITRI)	ATEX (PTB), Brazil (ULB), EAC (CCVE), IECEx (PTB), India (PESO), Korea (KGS), Taiwan (ITRI)
Electrical Data				
Rated operational current	max. 16 A	max. 16 A	max. 16 A	max. 16 A
Rated operational current note	Optional up to 20 A	Optional up to 20 A	Optional up to 20 A	Optional up to 20 A
Switching capacity main contacts	4 kW: 220 / 230 / 240 V 7.5 kW: 380 / 400 / 415 / 500 V 11 kW: 600 / 690 V	4 kW: 220 / 230 / 240 V 7.5 kW: 380 / 400 / 415 / 500 V 11 kW: 600 / 690 V	4 kW: 220 / 230 / 240 V 7.5 kW: 380 / 400 / 415 / 500 V 11 kW: 600 / 690 V	4 kW: 220 / 230 / 240 V 7.5 kW: 380 / 400 / 415 / 500 V 11 kW: 600 / 690 V
Notes	The current must be reduced to 12 A for frequencies > 100 Hz			

▲ Preferred products – in stock or available at short notice

Wall-Mounting Sockets
Series 8570/11 SolConeX 16 A

Technical Data				
Variant	**8570/11-...**	**8570/11-...-S001**	**8570/11-...-S011 8570/11-...-S012**	**8570/11-...-S019 8570/11-...-S020**
Device Specific Data				
Back-up fuse with thermal protection	35 A gG	35 A gG	35 A gG	35 A gG
Back-up fuse w/o thermal protection	16 A gG	16 A gG	16 A gG	16 A gG
Ambient Conditions				
Ambient temperature	-30 °C ... +55 °C (T6, 16 A)	-30 °C ... +55 °C (T6, 16 A)	-30 °C ... +55 °C (T6, 16 A)	-30 °C ... +55 °C (T6, 16 A)
Notes	Variants with a temperature range from -50 to +55 °C available on request; silicone as sealing material For further information, see the operating instructions.			
Mechanical Data				
Degree of protection IP (IEC 60529)	IP66	IP66	IP66	IP66
Enclosure material	Polyamide, Glass fibre reinforced	Polyamide, Glass fibre reinforced	Polyamide, Glass fibre reinforced	Polyamide, Glass fibre reinforced
Silicone-free	Yes	Yes	Yes	Yes
Solid connection terminals	1 x 1.5 mm² ... 2 x 6 mm²	1 x 1.5 mm² ... 2 x 6 mm²	1 x 1.5 mm² ... 2 x 6 mm²	1 x 1.5 mm² ... 2 x 6 mm²
Finely stranded connection terminals	1 x 1.5 mm² ... 2 x 4 mm²	1 x 1.5 mm² ... 2 x 4 mm²	1 x 1.5 mm² ... 2 x 4 mm²	1 x 1.5 mm² ... 2 x 4 mm²
Impact strength (IEC 60079)	7 J	7 J	7 J	7 J
Impact strength (IEC 62262)	IK10	IK10	IK10	IK10
Lockable in	in 0- and I-position	in 0- and I-position	in 0- and I-position	in 0- and I-position
Components				
Cable entry note	Entry 1: Lower left Entry 2: Lower right	Entry 1: Lower left Entry 2: Lower right	Entry 1: Lower left Entry 2: Lower right	Entry 1: Lower left Entry 2: Lower right
Entry 1	8161/7-M25-1707	8161/7-M25-1707	8290/3-M25	please see accessories
Entry 1 type	Polyamide cable gland	Polyamide cable gland	Polyamide stopping plug	
Entry 1	M25 x 1,5	M25 x 1,5	M25 x 1,5	M20 x 1,5
Entry 1 clamping range	7 ... 17 mm	7 ... 17 mm		
Metal entry possible 1	No	No	Yes	Yes
Entry 2	8290/3-M25	8161/7-M25-1707 with plug	8290/3-M25	8290/3-M20
Entry 2 type	Polyamide stopping plug	Polyamide cable gland	Polyamide stopping plug	Polyamide stopping plug
Entry 2	M25 x 1,5	M25 x 1,5	M25 x 1,5	M20 x 1,5
Entry 2 clamping range		7 – 17 mm		
Metal entry possible 2	No	No	Yes	Yes
Notes	Metal insert: Contains a brass plate with threaded holes Cable gland position: Bottom (standard); optionally also possible on the top or lateral			

E3

Accessories

Figure	Description	Art. No.	Listprice €	PS	Weight kg
Auxiliary contact					
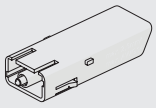	1 NC max. 500 V AC, max. 110 V DC max. 6 A 2 x 0.5 ... 2.5 mm² solid / finely stranded	150680	46.50	Z1	0.125
	1 NC, gold contact max. 500 V AC, max. 110 V DC max. 6 A 2 x 0.5 ... 2.5 mm² solid / finely stranded	150684	78.50	Z1	0.125
	1 NO max. 500 V AC, max. 110 V DC max. 6 A 2 x 0.5 ... 2.5 mm² solid / finely stranded	150682	46.50	Z1	0.125
	1 NO, gold contact max. 500 V AC, max. 110 V DC max. 6 A 2 x 0.5 ... 2.5 mm² solid / finely stranded	150686	78.50	Z1	0.125

Dimensional Drawings (All Dimensions in mm [inches]) – Subject to Alterations

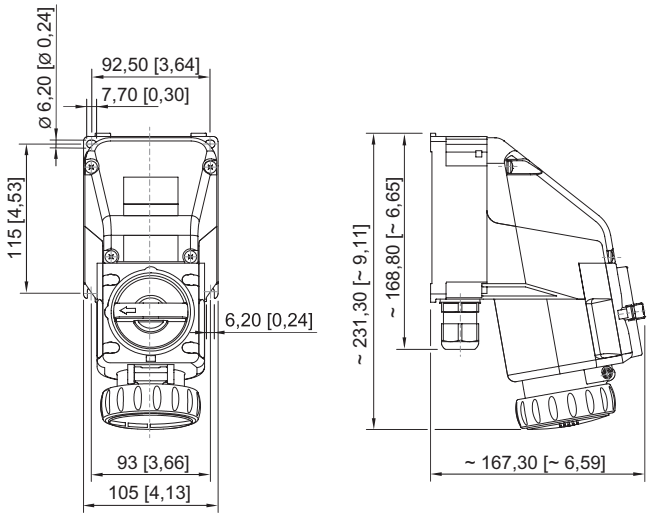

Wall-mounting socket 3-pole

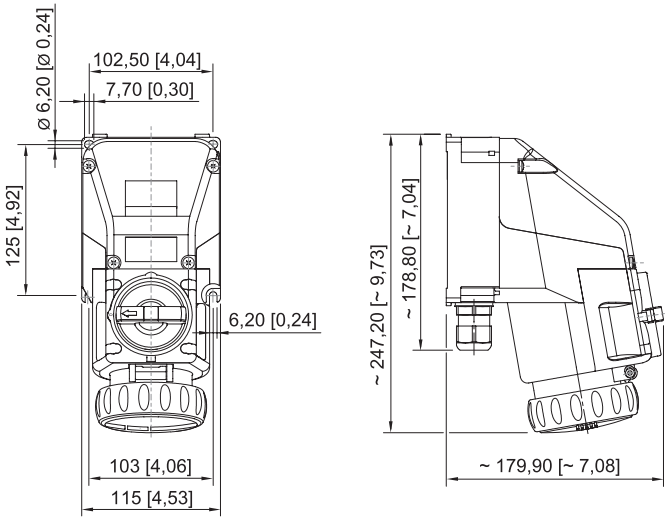

Wall-mounting socket 4-pole / 5-pole

Arrangement of the Earth Contact Sleeves

Example:
Clock hour position,
Front view of socket

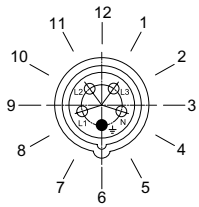

Example:
Clock hour position

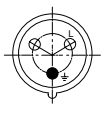

230 V = 6 h

Marking of connections
Front view of socket

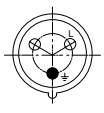

2 P + PE



3 P + PE



3 P + N + PE

E3



- No effect of torsion forces from the wire on the seal
- Full compatibility between SolConeX and CES devices
- Variants for use in the USA/Canada available on request
- Wide temperature range for use
- High mechanical impact and shock resistance
- Perfect protection against the ingress of liquids and dust
- 3D data available to download from the website

WebCode 8570E

R. STAHL Series 8570/12 SolConeX plugs for Zone 1/21 are 3-, 4- or 5-pole versions up to 16 A. The floating pins allow them to be inserted and removed quickly and easily. The pivoting strain relief makes it easier to install the cable. Self-cleaning and corrosion-free plug pins made from high-quality materials ensure optimum electrical contact.

	IECEx / ATEX					
Zone	0	1	2	20	21	22
Installation in		•	•		•	•

E3

Selection Table

Product Description Rated operational current		Plug 12 A								
Figure	Detailed number of poles	Coding (clock hour position)	Rated operational voltage AC	Colour code	Frequency range	Product Type	Art. No.	Listprice €	PS	Weight kg
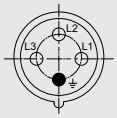	3 P + PE	10	> 50 V AC	Green	100 … 300 Hz	8570/12-410	258044	117.90	10	0.384

Product Description Rated operational current		Plug 16 A								
Figure	Detailed number of poles	Coding (clock hour position)	Rated operational voltage AC	Colour code	Frequency range	Product Type	Art. No.	Listprice €	PS	Weight kg
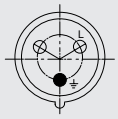	1 P + N + PE	4	100 ... 130 V AC	Yellow	50 / 60 Hz	8570/12-304	257778▲	104.50	10	0.331
	2 P + PE	3	> 50 ... 110 V DC	Light grey	–	8570/12-303	257777	104.50	10	0.331
		6	200 ... 250 V AC	Blue	50 / 60 Hz	8570/12-306	257780▲	104.50	10	0.331
		7	480 ... 500 V AC	Black	50 / 60 Hz	8570/12-307	257970	104.50	10	0.331
	3 P + N + PE	3	220/380 V AC	Red	50 Hz	8570/12-503	258037	128.60	10	0.444
		4	57/100 ... 75/ 130 V AC	Yellow	50 / 60 Hz	8570/12-504	258038	128.60	10	0.444
		5	347/600 ... 400/ 690 V AC	Black	50 / 60 Hz	8570/12-505	258035	128.60	10	0.444
		6	200/346 ... 240/ 415 V AC	Red	50 / 60 Hz	8570/12-506	258032	128.60	10	0.444
		7	277/480 ... 288/ 500 V AC	Black	50 / 60 Hz	8570/12-507	258033	128.60	10	0.444
		9	120/208 ... 144/ 250 V AC	Blue	50 / 60 Hz	8570/12-509	258034	128.60	10	0.444

▲ Preferred products – in stock or available at short notice

Selection Table

Product Description Rated operational current		Plug 16 A								
Figure	Detailed number of poles	Coding (clock hour position)	Rated operational voltage AC	Colour code	Frequency range	Product Type	Art. No.	Listprice €	PS	Weight kg
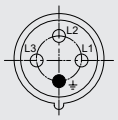	3 P + PE	4	100 ... 130 V AC	Yellow	50 / 60 Hz	8570/12-404	258047	117.90	10	0.384
		5	600 ... 690 V AC	Black	50 / 60 Hz	8570/12-405	258042	117.90	10	0.384
		6	380 ... 415 V AC	Red	50 / 60 Hz	8570/12-406	258039	117.90	10	0.384
		7	480 ... 500 V AC	Black	50 / 60 Hz	8570/12-407	258040	117.90	10	0.384
		9	200 ... 250 V AC	Blue	50 / 60 Hz	8570/12-409	258041	117.90	10	0.384
		11	440 ... 460 V AC	Red	60 Hz	8570/12-411	258043	117.90	10	0.384

Technical Data

Explosion Protection	
IECEx gas explosion protection	Ex db eb IIC T6 Gb
IECEx dust explosion protection	Ex tb IIIC T80 °C Db
ATEX gas explosion protection	Ⓔx II 2 G Ex db eb IIC T6 Gb
ATEX dust explosion protection	Ⓔx II 2 D Ex tb IIIC T80 °C Db
Certificates	ATEX (PTB), Brazil (ULB), EAC (CCVE), IECEx (PTB), India (PESO), Korea (KGS), Taiwan (ITRI)
Notes	CCC certificate available from 2021 onward
Notes	Product label may vary. Series devices have certification according to ATEX and IECEX.
Electrical Data	
Rated operational current	max. 16 A
Rated operational current note	Optional up to 20 A
Notes	The current must be reduced to 12 A for frequencies > 100 Hz
Ambient Conditions	
Ambient temperature	-50 °C ... +55 °C
Notes	For further information, see the operating instructions.
Mechanical Data	
Degree of protection (IP)	IP66
Degree of protection note	according to IEC/EN 60529
Enclosure material	Polyamide, Glass fibre reinforced
Silicone-free	No
Silicone-free note	Optional: Silicone-free variant are available on request (ambient temperature -30 °C to +55 ° C)
Finely stranded connection terminals	1 x 1.5 mm² ... 1 x 4 mm²
Components	
Cable diameter	8 … 18 mm

Dimensional Drawings (All Dimensions in mm [inches]) – Subject to Alterations

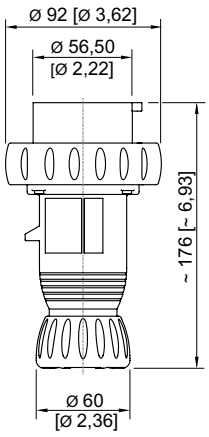

Plug 3 P + N + PE

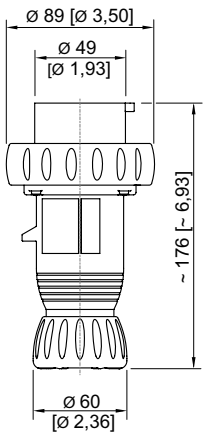

Plug 3 P + PE

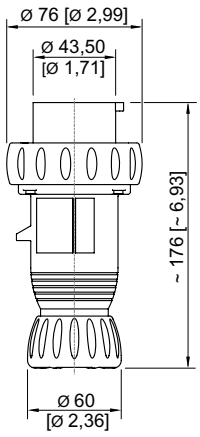

Plug 2 P + PE

Arrangement of the Earth Contact Sleeves

Example:
Clock hour position,
Front view of plug

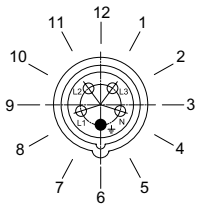

Example:
Clock hour position

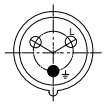

230 V = 6 h

Marking of connections
Front view of plug

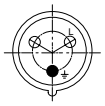

2 P + PE



3 P + PE



3 P + N + PE

E3



- Coupler sockets, 16 A, various voltage ranges as per EN 60309
- Safe transport in the stainless steel carrying frame with large carrying handle, free setup on stand feet
- Wide temperature range for use
- High mechanical impact and shock resistance
- Perfect protection against the ingress of liquids and dust
- 3D data available to download from the website

WebCode **8570B**

R. STAHL Series 8570/16 Zone 1 coupler sockets with switch socket are used to connect portable and fixed electrical equipment as well as cables and circuits in hazardous areas. Application range in Zone 1, 21 with full AC-3 switching capacity up to 16 A. With their stainless steel carrying frame with large carrying handle, they are easy to transport and can be positioned on the feet flexibly and securely.

	IECEx / ATEX					
Zone	0	1	2	20	21	22
Installation in		•	•		•	•

E3

Selection Table

Product Description	Coupler socket 16 A									
Figure	Detailed number of poles	Coding (clock hour position)	Rated operational voltage AC	Colour code	Frequency range	Product Type	Art. No.	Listprice €	PS	Weight kg
	2 P + PE	6	200 ... 250 V AC	Blue	50 / 60 Hz	8570/16-306	150662	495.20	10	2.100
	3 P + N + PE	6	200/346 ... 240/415 V AC	Red	50 / 60 Hz	8570/16-506	150669	600.40	10	2.450
	4 P (3 P + PE)	5	600 – 690 V	Black	50 / 60 Hz	8570/16-405	150667	568.40	10	2.350
		6	380 – 415 V	Red	50 / 60 Hz	8570/16-406	150664	568.40	10	2.350
		7	480 – 500 V	Black	50 / 60 Hz	8570/16-407	150665	568.40	10	2.350
	5 P (3 P + N + PE)	5	347 – 400 V / 600 – 690 V	Black	50 / 60 Hz	8570/16-505	150673	592.30	10	2.450
		7	277 – 288 V / 480 – 500 V	Black	50 / 60 Hz	8570/16-507	150671	592.30	10	2.450

Variants with temperature range of -50 … +55 °C available on request; silicone is used as a sealing material

Technical Data

Explosion Protection	
IECEx gas explosion protection	Ex db eb IIC T6 Gb

Coupler Sockets
Series 8570/16 SolConeX 16 A

Technical Data	
Explosion Protection	
IECEx dust explosion protection	Ex tb IIIC T80 °C Db
ATEX gas explosion protection	Ⓔx II 2 G Ex db eb IIC T6 Gb
ATEX dust explosion protection	Ⓔx II 2 D Ex tb IIIC T80 °C Db
Certificates	ATEX (PTB), Brazil (ULB), EAC (CCVE), IECEx (PTB), India (PESO), Korea (KGS), Taiwan (ITRI)
Explosion protection note	Product label may vary. Series devices have certification according to ATEX and IECEX.
Electrical Data	
Rated operational current	max. 16 A
Ambient Conditions	
Ambient temperature	-30 °C ... +55 °C
Notes	Variants with temperature range of -50 … +55 °C available on request; silicone is used as a sealing material For further information, refer to the operating instructions.
Mechanical Data	
Degree of protection IP (IEC 60529)	IP66
Enclosure material	Polyamide, Glass fibre reinforced
Material mounting frame	Stainless steel
Silicone-free	Yes
Solid connection terminals	1 x 1.5 mm² ... 2 x 6 mm²
Finely stranded connection terminals	1 x 1.5 mm² ... 2 x 4 mm²
Impact strength (IEC 60079)	7 J
Impact strength (IEC 62262)	IK10
Lockable in	in 0- and I-position
Components	
Cable entry note	Entry 1: Lower left Entry 2: Lower right
Entry 1	HSK-K-MZ-Ex M25x1.5
Entry 1 type	Polyamide cable gland with strain relief
Entry 1	M25 x 1,5
Entry 1 clamping range	13 … 18 mm
Entry 2	8290/3-M25
Entry 2 type	Polyamide stopping plug
Entry 2	M25 x 1,5

Dimensional Drawings (All Dimensions in mm [inches]) – Subject to Alterations

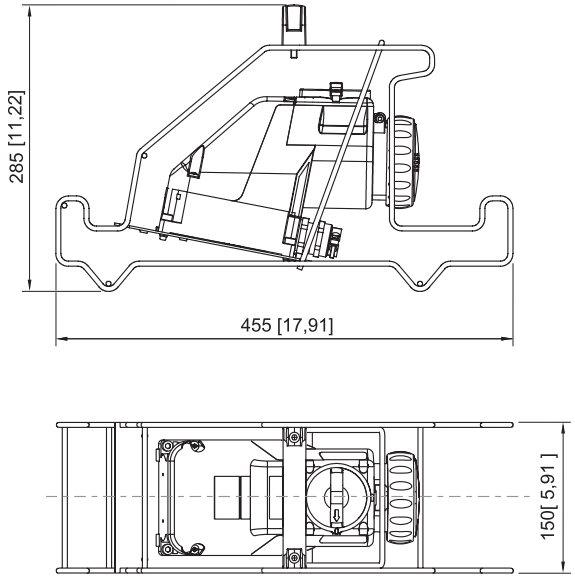

Coupler Socket

Coupler Sockets

Series 8571/16 SolConeX 32 A



- Coupler sockets, 32 A, various voltage ranges as per EN 60309
- Safe transport in the stainless steel carrying frame with large carrying handle, free setup on stand feet
- Wide temperature range for use
- High mechanical impact and shock resistance
- Perfect protection against the ingress of liquids and dust
- 3D data available to download from the website

WebCode 8571F

R. STAHL Series 8571/16 Zone 1 coupler sockets with switch socket are used to connect portable and fixed electrical equipment as well as cables and circuits in hazardous areas. Application range in Zone 1, 21 with full AC-3 switching capacity up to 32 A. With their stainless steel carrying frame with large carrying handle, they are easy to transport and can be positioned on the feet flexibly and securely.

	IECEx / ATEX					
Zone	0	1	2	20	21	22
Installation in		•	•		•	•

Selection Table

Product Description		Coupler socket 32 A								
Figure	Detailed number of poles	Rated operational voltage AC	Coding (clock hour position)	Colour code	Frequency range	Product Type	Art. No.	Listprice €	PS	Weight kg
	3 P + N + PE	200/346 ... 240/ 415 V AC	6	Red	50 / 60 Hz	8571/16-506	150957	981.90	10	3.350
	4 P (3 P + PE)	380 – 415 V	6	Red	50 / 60 Hz	8571/16-406	150952	924.80	10	3.100
		480 – 500 V	7	Black	50 / 60 Hz	8571/16-407	150953	924.80	10	3.100
		600 – 690 V	5	Black	50 / 60 Hz	8571/16-405	150955	933.60	10	3.100
	5 P (3 P + N + PE)	277 – 288 V / 480 – 500 V	7	Black	50 / 60 Hz	8571/16-507	150959	969.40	10	3.350
		347 – 400 V / 600 – 690 V	5	Black	50 / 60 Hz	8571/16-505	150961	969.40	10	3.350

Variants with temperature range of -50 … +55 °C available on request; silicone is used as a sealing material

Technical Data

Variant	Coupler socket 32 A
Explosion Protection	
IECEx gas explosion protection	Ex db eb IIC T6 ... T5 Gb
IECEx dust explosion protection	Ex tb IIIC T60 °C ... T75 °C Db
ATEX gas explosion protection	Ⓔx II 2 G Ex db eb IIC T6 ... T5 Gb
ATEX dust explosion protection	Ⓔx II 2 D Ex tb IIIC T60 °C ... T75 °C Db

Technical Data	
Variant	**Coupler socket 32 A**
Explosion Protection	
Certificates	ATEX (PTB), Brazil (ULB), IECEx (PTB), India (PESO), Taiwan (ITRI)
Notes	CCC certificate available from 2021 onward
Explosion protection note	Product label may vary. Series devices have certification according to ATEX and IECEX.
Electrical Data	
Rated operational current	max. 32 A
Ambient Conditions	
Ambient temperature	-30 °C ... +40 °C (T6) -30 °C ... +55 °C (T5)
Notes	Variants with temperature range of -50 … +55 °C available on request; silicone is used as a sealing material For further information, refer to the operating instructions.
Mechanical Data	
Degree of protection IP (IEC 60529)	IP66
Enclosure material	Polyamide, Glass fibre reinforced
Material mounting frame	Stainless steel
Silicone-free	Yes
Solid connection terminals	1 x 2.5 mm² ... 2 x 10 mm²
Finely stranded connection terminals	1 x 2.5 mm² ... 2 x 6 mm²
Impact strength (IEC 60079)	7 J
Impact strength (IEC 62262)	IK10
Lockable in	in 0- and I-position
Components	
Cable entry note	Entry 1: Lower left Entry 2: Lower right
Entry 1	HSK-K-MZ-Ex M32x1.5
Entry 1 type	Polyamide cable gland with strain relief
Entry 1	M32 x 1,5
Entry 1 clamping range	18 … 25 mm
Entry 2	8290/3-M32
Entry 2 type	Polyamide stopping plug
Entry 2	M32 x 1,5

Dimensional Drawings (All Dimensions in mm [inches]) – Subject to Alterations

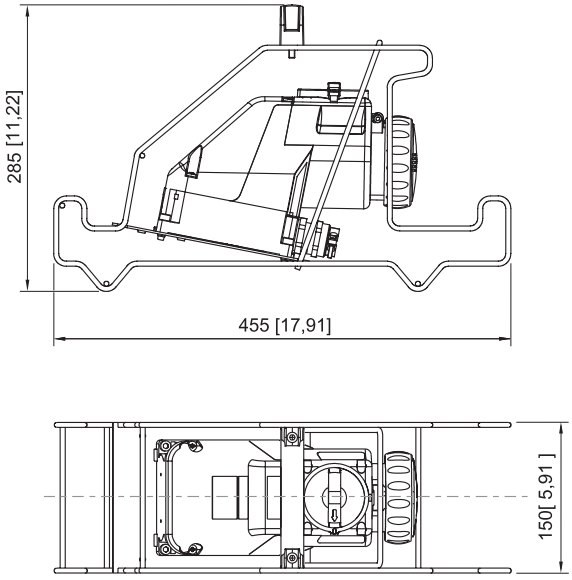

Coupler Socket



- Small dimensions
- Wide temperature range for use
- High mechanical impact and shock resistance
- Perfect protection against the ingress of liquids and dust
- 3D data available to download from the website

WebCode 8572A

The sockets in the new R. STAHL Series 8572/13 are 16 A compact sockets for voltages up to 277 V. Self-cleaning lamellar contacts provide optimum contact. Compact dimensions and a deep-drawn enclosure are required for fast electrical installation. The integrated locking mechanism prevents disconnection under load.

	IECEx / ATEX					
Zone	0	1	2	20	21	22
Installation in		•	•		•	•

Selection Table

Product Description Rated operational current		Small socket 10 A / 12 A							
Figure	Detailed number of poles	Coding (clock hour position)	Rated operational voltage AC	Colour code	Frequency range	Product Type	Art. No.	Listprice €	PS	Weight kg
	2 P + PE	2	> 50 V AC	Green	> 300 … 500 Hz	8572/13-302	242338	265.70	10	0.380

Product Description Rated operational current		Small socket 10 A / 16 A							
Figure	Detailed number of poles	Coding (clock hour position)	Rated operational voltage AC	Colour code	Frequency range	Product Type	Art. No.	Listprice €	PS	Weight kg
	1 P + N + PE	4	100 ... 130 V AC	Yellow	50 / 60 Hz	8572/13-304	242336	265.70	10	0.380
	2 P + PE	6	200 ... 250 V AC	Blue	50 / 60 Hz	8572/13-306	242334▲	265.70	10	0.380

Product Description Rated operational current		Small socket to an isolation transformer 10 A / 16 A							
Figure	Detailed number of poles	Coding (clock hour position)	Rated operational voltage AC	Colour code	Frequency range	Product Type	Art. No.	Listprice €	PS	Weight kg
	2 P + PE	12	50 ... 250 V AC	Blue	50 / 60 Hz	8572/13-312	242339	265.70	10	0.380

Wall-Mounting Socket, Compact

Series 8572/13 SolConeX 16 A

Technical Data	
Explosion Protection	
IECEx gas explosion protection	Ex db eb IIC T6 Gb
IECEx dust explosion protection	Ex tb IIIC T75 °C Db
ATEX gas explosion protection	Ⓔx II 2 G Ex db eb IIC T6 Gb
ATEX dust explosion protection	Ⓔx II 2 D Ex tb IIIC T75 °C Db
Certificates	ATEX (PTB), China (CQST), EAC (CCVE), IECEx (PTB)
Notes	CCC certificate available from 2021 onward
Explosion protection note	Product label may vary. Series devices have certification according to ATEX and IECEX.
Electrical Data	
Rated operational current	max. 12 A
Notes	The current must be reduced to 12 A for frequencies > 100 Hz
Ambient Conditions	
Ambient temperature	-50 °C ... +55 °C (12 A) -50 °C ... +65 °C (10 A)
Notes	For further information, see the operating instructions.
Mechanical Data	
Degree of protection (IP)	IP66
Degree of protection note	accordding to IEC/EN 60529
Enclosure material	Polyamide, Glass fibre reinforced
Silicone-free	No
Silicone-free note	Optional: Silicone-free variant available on request (ambient temperature -40 °C to +65 ° C)
Solid connection terminals	1 x 0.75 mm² ... 2 x 4 mm²
Finely stranded connection terminals	1 x 0.75 mm² ... 2 x 4 mm²
Components	
Cable entry note	Entry 1: Lower left Entry 2: Lower right
Entry 1	8161/7-M25-1707
Entry 1	M25
Entry 1 clamping range	7 … 17 mm
Entry 2	8290/3-M25
Entry 2	M25
Notes	Cable gland position: Bottom (standard); optionally also possible on the top or lateral

Spare Parts

Figure	Description	Art. No.	Listprice €	PS	Weight kg
Protective cap for plugs 16 A					
	3 pole	150496	27.90	E1	0.043

Dimensional Drawings (All Dimensions in mm [inches]) – Subject to Alterations

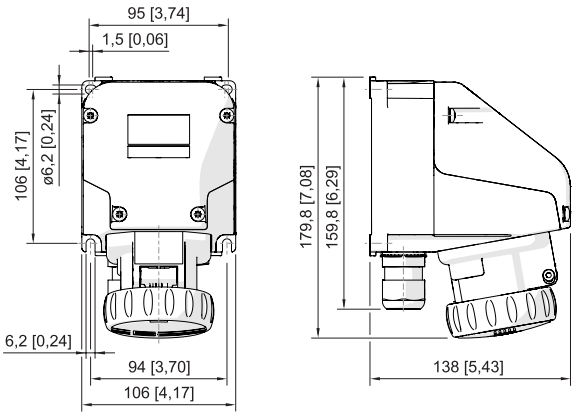

Wall-mounting socket, compact 3-pole

Arrangement of the Earth Contact Sleeves

Example:
Clock hour position,
Front view of socket

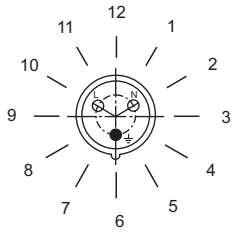

Example:
Clock hour position



200 … 250 V = 6 h

Marking of connections
Front view of socket



2 P + PE

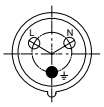

1 P + N + PE

E3

Coupler

Series 8572/14 SolConeX 16 A



- Wear-free, corrosion-protected contacts even in an aggressive atmosphere
- Wide temperature range for use
- High mechanical impact and shock resistance
- Perfect protection against the ingress of liquids and dust
- 3D data available to download from the website

WebCode 8572B

R. STAHL Series 8572/14 coupler are 3-pole 16 A compact coupler made from robust plastic for voltages up to 277 V. Self-cleaning lamellar contacts provide optimum contact and the floating pins allow the plugs to be inserted and removed in the zero position with minimum effort. The integrated locking mechanism prevents disconnection under load.

	IECEx / ATEX					
Zone	0	1	2	20	21	22
Installation in		•	•		•	•

Selection Table

Product Description Rated operational current			Coupling 10 A / 12 A							
Figure	Detailed number of poles	Coding (clock hour position)	Rated operational voltage AC	Colour code	Frequency range	Product Type	Art. No.	Listprice €	PS	Weight kg
	2 P + PE	2	> 50 V AC	Green	> 300 … 500 Hz	8572/14-302	242345	275.20	10	0.380

Product Description Rated operational current			Coupling 10 A / 16 A							
Figure	Detailed number of poles	Coding (clock hour position)	Rated operational voltage AC	Colour code	Frequency range	Product Type	Art. No.	Listprice €	PS	Weight kg
	1 P + N + PE	4	100 ... 130 V AC	Yellow	50 / 60 Hz	8572/14-304	242343 ▲	275.20	10	0.380
		5	277 V AC	Light grey	60 Hz	8572/14-305	242342	275.20	10	0.380
	2 P + PE	3	> 50 ... 110 V DC	Light grey	–	8572/14-303	242344	275.20	10	0.380
		6	200 ... 250 V AC	Blue	50 / 60 Hz	8572/14-306	242341 ▲	275.20	10	0.380

Product Description Rated operational current			Coupling to an isolation transformer 10 A / 16 A							
Figure	Detailed number of poles	Coding (clock hour position)	Rated operational voltage AC	Colour code	Frequency range	Product Type	Art. No.	Listprice €	PS	Weight kg
	2 P + PE	12	50 ... 250 V AC	Blue	50 / 60 Hz	8572/14-312	242346	292.20	10	0.380

▲ Preferred products – in stock or available at short notice

Technical Data

Variant	Coupling
Explosion Protection	
IECEx gas explosion protection	Ex db eb IIC T6 Gb
IECEx dust explosion protection	Ex tb IIIC T75 °C Db
ATEX gas explosion protection	Ⓔx II 2 G Ex db eb IIC T6 Gb
ATEX dust explosion protection	Ⓔx II 2 D Ex tb IIIC T75 °C Db
Certificates	ATEX (PTB), China (CQST), EAC (CCVE), IECEx (PTB)
Notes	Product label may vary. Series devices have certification according to ATEX and IECEX.
Electrical Data	
Rated operational current	max. 16 A
Notes	The current must be reduced to 12 A for frequencies > 100 Hz
Ambient Conditions	
Ambient temperature	-50 °C ... +45 °C (16 A) -50 °C ... +65 °C (10 A)
Notes	For further information, see the operating instructions.
Mechanical Data	
Degree of protection (IP)	IP66
Degree of protection note	according to IEC/EN 60529
Enclosure material	Polyamide, Glass fibre reinforced
Silicone-free	No
Silicone-free note	Optional: Silicone-free variant available on request (ambient temperature -40 °C to +65 ° C)
Finely stranded connection terminals	1 x 0.75 mm² ... 1 x 4 mm²
Components	
Cable diameter	8 … 15 mm

Spare Parts

Figure	Description	Art. No.	Listprice €	PS	Weight kg
Protective cap for plugs 16 A					
	3 pole	150496	27.90	E1	0.043

E3

Coupler
Series 8572/14 SolConeX 16 A

Dimensional Drawings (All Dimensions in mm [inches]) – Subject to Alterations

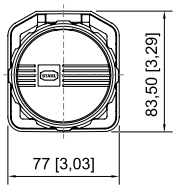

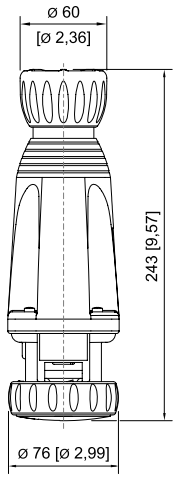

Coupler

E3

Arrangement of the Earth Contact Sleeves

Example:
Clock hour position,
Front view of socket

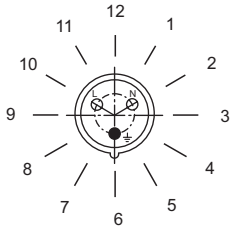

Example:
Clock hour position



200 … 250 V = 6 h

Marking of connections
Front view of socket



2 P + PE

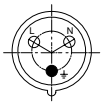

1 P + N + PE

Wall-Mounting Sockets, Compact, Extra-Low Voltage

Series 8573/13 SolConeX 16 A



- Compact dimensions
- Wide temperature range for use
- High mechanical impact and shock resistance
- Perfect protection against the ingress of liquids and dust
- 3D data available to download from the website

WebCode 8573B

The sockets of the new R. STAHL Series 8573/13 are for 2- or 3-pole applications up to 16 A. The compact sockets for extra-low voltage up to 50 V are made from robust and chemical-resistant plastics. Self-cleaning lamellar contacts provide optimum contact. The integrated rotary switch mechanism and integrated locking device reliably prevent disconnection under loads.
The new compact socket from Series 8573/13 replaces Series 8575 sockets, is 100% compatible with this series and can be used with Series 8575 plugs.

	IECEx / ATEX					
Zone	0	1	2	20	21	22
Installation in		•	•		•	•

Selection Table

Product Description Rated operational current			Small socket 10 A / 12 A							
Figure	Detailed number of poles	Coding (clock hour position)	Rated operational voltage AC	Colour code	Frequency range	Product Type	Art. No.	Listprice €	PS	Weight kg
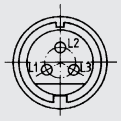	3 P	4	20 ... 25 & 40 ... 50 V AC	Green	100 ... 200 Hz	8573/13-304	243153	265.70	10	0.300

Product Description Rated operational current			Small socket 10 A / 16 A							
Figure	Detailed number of poles	Coding (clock hour position)	Rated operational voltage AC	Colour code	Frequency range	Product Type	Art. No.	Listprice €	PS	Weight kg
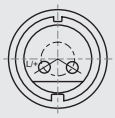	2 P	0	20 ... 25 V AC	Violet	50 / 60 Hz	8573/13-200	243157▲	259.20	10	0.300
	3 P	0	20 ... 25 V AC	Violet	50 / 60 Hz	8573/13-300	241380▲	265.70	10	0.300

▲ Preferred products – in stock or available at short notice

Wall-Mounting Sockets, Compact, Extra-Low Voltage

Series 8573/13 SolConeX 16 A

Technical Data	
Explosion Protection	
IECEx gas explosion protection	Ex db eb IIC T6 Gb
IECEx dust explosion protection	Ex tb IIIC T70 °C Db
ATEX gas explosion protection	Ⓔx II 2 G Ex db eb IIC T6 Gb
ATEX dust explosion protection	Ⓔx II 2 D Ex tb IIIC T70 °C Db
Certificates	ATEX (PTB), EAC (CCVE), IECEx (PTB)
Notes	CCC certificate available from 2021 onward
Explosion protection note	Product label may vary. Series devices have certification according to ATEX and IECEX.
Electrical Data	
Rated operational current	max. 16 A
Notes	The current must be reduced to 12 A for frequencies > 100 Hz
Ambient Conditions	
Ambient temperature	-50 °C ... +40 °C (16 A) -50 °C ... +60 °C (10 A)
Notes	For further information, see the operating instructions.
Mechanical Data	
Degree of protection (IP)	IP66
Degree of protection note	according to IEC/EN 60529
Enclosure material	Polyamide, Glass fibre reinforced
Silicone-free	No
Silicone-free note	Optional: Silicone-free variant available on request (ambient temperature -40 °C to +60 ° C)
Solid connection terminals	1 x 0.75 mm² ... 2 x 4 mm²
Finely stranded connection terminals	1 x 0.75 mm² ... 2 x 4 mm²
Components	
Cable entry note	Entry 1: Lower left Entry 2: Lower right
Entry 1	8161/7-M25-1707
Entry 1	M25
Entry 1 clamping range	7 … 17 mm
Metal entry possible 1	No
Entry 2	8290/3-M25
Entry 2	M25
Metal entry possible 2	No
Notes	Cable gland position: Bottom (standard); optionally also possible on the top or lateral

Dimensional Drawings (All Dimensions in mm [inches]) – Subject to Alterations

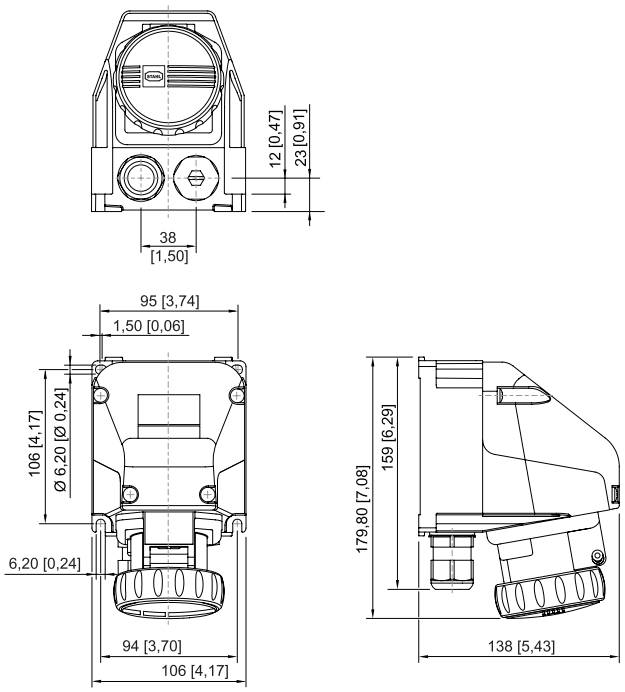

Wall-mounting socket, compact, extra-low voltage

Arrangement of the Earth Contact Sleeves

Example:
Clock hour position,
Front view of socket

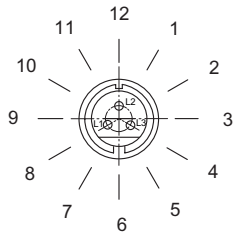

Example:
Clock hour position

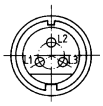

40 … 50 V = 12 h

Marking of connections
Front view of socket



2 P

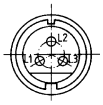

3 P

Plugs, Extra-Low Voltage

Series 8573/12 SolConeX 16 A



- Wide temperature range for use
- High mechanical impact and shock resistance
- Perfect protection against the ingress of liquids and dust
- 3D data available to download from the website

WebCode 8573D

The new R. STAHL Series 8573/12 plugs are designed for 2- or 3-pole applications up to 16 A. The robust plastic plugs are resistant to corrosive chemicals and gases. The floating pins allow them to be inserted and removed quickly and easily. The inner, pivoting strain relief makes it easier to install the cables quickly. Corrosion-free contact pins made from high-quality materials ensure optimum electrical contact.
The new Series 8573/12 plug replaces the plug Series 8575, is 100% compatible with this Series and can be used with Series 8575 sockets.

	IECEx / ATEX					
Zone	0	1	2	20	21	22
Installation in		•	•		•	•

Selection Table

Product Description Rated operational current Type of voltage			Plug 12 A / 10 A Extra-low voltage							
Figure	Detailed number of poles	Coding (clock hour position)	Rated operational voltage	Colour code	Frequency range	Product Type	Art. No.	Listprice €	PS	Weight kg
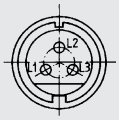	3 P	4	20 ... 25 & 40 ... 50 V AC	Green	100 … 200 Hz	8573/12-304	243193	98.00	10	0.300

Product Description Rated operational current Type of voltage			Plug 16 A / 10 A Extra-low voltage							
Figure	Detailed number of poles	Coding (clock hour position)	Rated operational voltage	Colour code	Frequency range	Product Type	Art. No.	Listprice €	PS	Weight kg
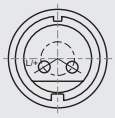	2 P	0	20 ... 25 V AC	Violet	50 / 60 Hz	8573/12-200	243197▲	93.60	10	0.300
		10	20 ... 25 V DC	Violet	–	8573/12-210	243203▲	93.60	10	0.300
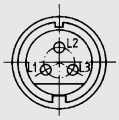	3 P	0	20 ... 25 V AC	Violet	50 / 60 Hz	8573/12-300	243190▲	98.00	10	0.300

Technical Data	
Explosion Protection	
IECEx gas explosion protection	Ex eb IIC T6 Gb
IECEx dust explosion protection	Ex tb IIIC T70 °C Db
ATEX gas explosion protection	II 2 G Ex eb IIC T6 Gb
ATEX dust explosion protection	II 2 D Ex tb IIIC T70 °C Db
Certificates	ATEX (PTB), EAC (CCVE), IECEx (PTB)
Notes	CCC certificate available from 2021 onward
Explosion protection note	Product label may vary. Series devices have certification according to ATEX and IECEX.
Electrical Data	
Rated operational current	max. 10 A
Notes	The current must be reduced to 12 A for frequencies > 100 Hz
Ambient Conditions	
Ambient temperature	-50 °C ... +40 °C (10 A) -50 °C ... +60 °C (16 A)
Notes	For further information, see the operating instructions.
Mechanical Data	
Degree of protection (IP)	IP66
Degree of protection note	according to IEC/EN 60529
Enclosure material	Polyamide, Glass fibre reinforced
Silicone-free	No
Silicone-free note	Optional: Silicone-free variant available on request (ambient temperature -40 °C to +60 ° C)
Finely stranded connection terminals	1 x 0.75 mm² ... 1 x 10 mm²
Components	
Cable diameter	8 … 15 mm

Dimensional Drawings (All Dimensions in mm [inches]) – Subject to Alterations

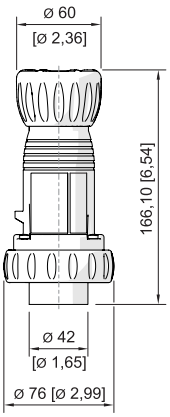

Plug extra-low voltage

E3

Arrangement of the Earth Contact Sleeves

Example:
Clock hour position,
Front view of plug

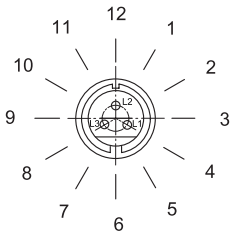

Example:
Clock hour position

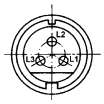

40 … 50 V = 12 h

Marking of connections
Front view of plug



2 P

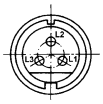

3 P

E3



- Wide temperature range for use
- High mechanical impact and shock resistance
- Perfect protection against the ingress of liquids and dust
- 3D data available to download from the website

WebCode 8573C

The new R. STAHL Series 8573/14 couplers are designed for 2- or 3-pole applications up to 16 A for low voltages up to 50 V. The robust, chemical-resistant plastic allows for a compact design. Self-cleaning lamellar contacts provide optimum contact. The integrated rotary switch mechanism and the integrated locking mechanism prevent disconnection under load.

	IECEx / ATEX					
Zone	0	1	2	20	21	22
Installation in		•	•		•	•

Selection Table

Figure	Detailed number of poles	Coding (clock hour position)	Rated operational voltage AC	Colour code	Frequency range	Product Type	Art. No.	Listprice €	PS	Weight kg
Product Description Rated operational current			Coupling 10 A / 12 A							
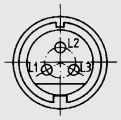	3 P	4	20 ... 25 & 40 ... 50 V AC	Green	100 ... 200 Hz	8573/14-304	243178	275.20	10	0.300
Product Description Rated operational current			Coupling 10 A / 16 A							
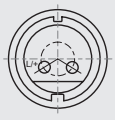	2 P	0	20 ... 25 V AC	Violet	50 / 60 Hz	8573/14-200	243182	269.90	10	0.300
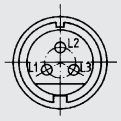	3 P	0	20 ... 25 V AC	Violet	50 / 60 Hz	8573/14-300	243175	275.20	10	0.300

Technical Data

Explosion Protection	
IECEx gas explosion protection	Ex db eb IIC T6 Gb
IECEx dust explosion protection	Ex tb IIIC T70 °C Db

Coupler, Extra-Low Voltage

Series 8573/14 SolConeX 16 A

Technical Data	
Explosion Protection	
ATEX gas explosion protection	II 2 G Ex db eb IIC T6 Gb
ATEX dust explosion protection	II 2 D Ex tb IIIC T70 °C Db
Certificates	ATEX (PTB), EAC (CCVE), IECEx (PTB)
Notes	CCC certificate available from 2021 onward
Explosion protection note	Product label may vary. Series devices have certification according to ATEX and IECEX.
Electrical Data	
Rated operational current	max. 16 A
Notes	The current must be reduced to 12 A for frequencies > 100 Hz
Ambient Conditions	
Ambient temperature	-50 °C ... +40 °C (16 A) -50 °C ... +60 °C (10 A)
Notes	For further information, see the operating instructions.
Mechanical Data	
Degree of protection (IP)	IP66
Degree of protection note	according to IEC/EN 60529
Enclosure material	Polyamide, Glass fibre reinforced
Silicone-free	No
Silicone-free note	Optional: Silicone-free variant available on request (ambient temperature -40 °C to +60 ° C)
Finely stranded connection terminals	1 x 0.75 mm² ... 1 x 4 mm²
Components	
Cable diameter	8 … 15 mm

Dimensional Drawings (All Dimensions in mm [inches]) – Subject to Alterations

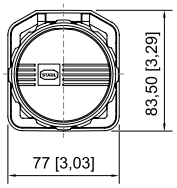

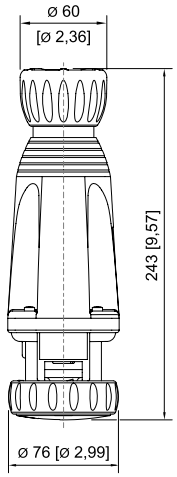

Coupler

Arrangement of the Earth Contact Sleeves

Example:
Clock hour position,
Front view of socket

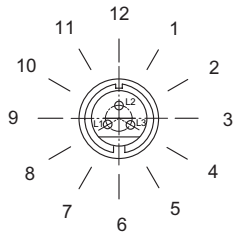

Example:
Clock hour position

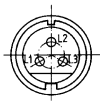

40 … 50 V = 12 h

Marking of connections
Front view of socket



2 P

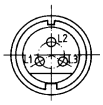

3 P

Wall-Mounting Sockets

Series 8571/11 SolConeX 32 A



- Optional: Pluggable, easily retrofittable Ex e or Ex i auxiliary contacts for control and signalling purposes
- Motor switching capacity AC-3 as per IEC/EN 60947-3
- Variants for use in the USA/Canada available on request
- Wide temperature range for use
- High mechanical impact and shock resistance
- Perfect protection against the ingress of liquids and dust
- 3D data available to download from the website

WebCode 8571A

R. STAHL Series 8571/11 SolConeX sockets for Zone 1/21 in a 3-, 4- and 5-pole version have full AC-3 switching capacity up to 32 A. The high degree of protection IP66 guarantees the highest level of protection against the penetration of dust and/or water in any application position. Self-cleaning lamellar contacts provide optimum contact and the plugs can be inserted and removed in the zero position quickly and easily. The load disconnect switch, with mechanical locking device and a handle that can be locked in the 0 or I position, is an additional safety feature.

	IECEx / ATEX					
Zone	0	1	2	20	21	22
Installation in		•	•		•	•

E3

Selection Table

Product Description Product variant			Wall socket 32 A Standard							
Figure	Detailed number of poles	Coding (clock hour position)	Rated operational voltage AC	Colour code	Frequency range	Product Type	Art. No.	Listprice €	PS	Weight kg
	3 P + N + PE	5	347/600 ... 400/ 690 V AC	Black	50 / 60 Hz	8571/11-505	150876	791.60	10	2.200
		6	200/346 ... 240/ 415 V AC	Red	50 / 60 Hz	8571/11-506	150854▲	791.60	10	2.200
		7	277/480 ... 288/ 500 V AC	Black	50 / 60 Hz	8571/11-507	150863	791.60	10	2.200
	3 P + PE	5	600 ... 690 V AC	Black	50 / 60 Hz	8571/11-405	150902	773.50	10	2.200
		6	380 ... 415 V AC	Red	50 / 60 Hz	8571/11-406	150890▲	773.50	10	2.200
		7	480 ... 500 V AC	Black	50 / 60 Hz	8571/11-407	150894	773.50	10	2.200
		9	200 ... 250 V AC	Blue	50 / 60 Hz	8571/11-409	150898	773.50	10	2.200
		11	440 ... 460 V AC	Red	60 Hz	8571/11-411	150910	773.50	10	2.200
Product Description Product variant Auxiliary contacts			Wall socket 32 A Variants with auxiliary contact 1 (1 NO)							
Figure	Detailed number of poles	Coding (clock hour position)	Rated operational voltage AC	Colour code	Frequency range	Product Type	Art. No.	Listprice €	PS	Weight kg
	3 P + PE	6	380 ... 415 V AC	Red	50 / 60 Hz	8571/11-406-S001	220135	845.30	10	2.200
		7	480 ... 500 V AC	Black	50 / 60 Hz	8571/11-407-S001	166610	810.80	10	2.200

▲ Preferred products – in stock or available at short notice

Selection Table

Product Description	Wall socket 32 A
Product variant	Variants with metal earth plate for double metal insert and stopping plug

Figure	Detailed number of poles	Coding (clock hour position)	Rated operational voltage AC	Colour code	Frequency range	Product Type	Art. No.	Listprice €	PS	Weight kg
	3 P + N + PE	6	200/346 ... 240/ 415 V AC	Red	50 / 60 Hz	8571/11-506-S012	214069	832.00	10	2.200

Variants with a temperature range from -50 to +55 °C available on request; silicone as sealing material

Technical Data

Variant	8571/11-...	8571/11-...-S001	8571/11-...-S012
Explosion Protection			
IECEx gas explosion protection	Ex db eb IIC T6 ... T5 Gb	Ex db eb IIC T6 ... T5 Gb	Ex db eb IIC T6 ... T5 Gb
IECEx dust explosion protection	Ex tb IIIC T60 °C ... T75 °C Db	Ex tb IIIC T60 °C ... T75 °C Db	Ex tb IIIC T60 °C ... T75 °C Db
ATEX gas explosion protection	Ⓔx II 2 G Ex db eb IIC T6 ... T5 Gb	Ⓔx II 2 G Ex db eb IIC T6 ... T5 Gb	Ⓔx II 2 G Ex db eb IIC T6 ... T5 Gb
ATEX dust explosion protection	Ⓔx II 2 D Ex tb IIIC T60 °C ... T75 °C Db	Ⓔx II 2 D Ex tb IIIC T60 °C ... T75 °C Db	Ⓔx II 2 D Ex tb IIIC T60 °C ... T75 °C Db
Certificates	ATEX (PTB), Brazil (ULB), EAC (ENDCE), IECEx (PTB), India (PESO), Korea (KGS), Taiwan (ITRI)	ATEX (PTB), Brazil (ULB), EAC (ENDCE), IECEx (PTB), India (PESO), Korea (KGS), Taiwan (ITRI)	ATEX (PTB), Brazil (ULB), EAC (ENDCE), IECEx (PTB), India (PESO), Korea (KGS), Taiwan (ITRI)
Notes	CCC certificate available from 2021 onward	CCC certificate available from 2021 onward	CCC certificate available from 2021 onward
Electrical Data			
Rated operational current	max. 32 A	max. 32 A	max. 32 A
Switching capacity main contacts	AC-3: 690 V, 32 A 7.5 kW: 220 / 230 / 240 V 15 kW: 380 / 400 / 415 V 30 kW: 600 / 690 V	AC-3: 690 V, 32 A 7.5 kW: 220 / 230 / 240 V 15 kW: 380 / 400 / 415 V 30 kW: 600 / 690 V	AC-3: 690 V, 32 A 7.5 kW: 220 / 230 / 240 V 15 kW: 380 / 400 / 415 V 30 kW: 600 / 690 V
Notes	The current must be reduced to 25 A for frequencies > 100 Hz		
Device Specific Data			
Back-up fuse with thermal protection	63 A gG	63 A gG	63 A gG
Back-up fuse w/o thermal protection	35 A gG	35 A gG	35 A gG
Ambient Conditions			
Ambient temperature	-30 °C ... +40 °C (T6) -30 °C ... +55 °C (T5)	-30 °C ... +40 °C (T6) -30 °C ... +55 °C (T5)	-30 °C ... +40 °C (T6) -30 °C ... +55 °C (T5)
Notes	Variants with a temperature range from -50 to +55 °C available on request; silicone as sealing material For further information, see the operating instructions.		
Mechanical Data			
Degree of protection IP (IEC 60529)	IP66	IP66	IP66
Enclosure material	Polyamide, Glass fibre reinforced	Polyamide, Glass fibre reinforced	Polyamide, Glass fibre reinforced
Silicone-free	Yes	Yes	Yes
Solid connection terminals	1 x 2.5 mm² ... 2 x 10 mm²	1 x 2.5 mm² ... 2 x 10 mm²	1 x 2.5 mm² ... 2 x 10 mm²
Finely stranded connection terminals	1 x 2.5 mm² ... 2 x 6 mm²	1 x 2.5 mm² ... 2 x 6 mm²	1 x 2.5 mm² ... 2 x 6 mm²
Impact strength (IEC 60079)	7 J	7 J	7 J
Impact strength (IEC 62262)	IK10	IK10	IK10
Lockable in	in 0- and I-position	in 0- and I-position	in 0- and I-position
Components			
Cable entry note	Entry 1: Lower left Entry 2: Lower right	Entry 1: Lower left Entry 2: Lower right	Entry 1: Lower left Entry 2: Lower right
Entry 1	8161/7-M32-2109	8161/7-M32-2109	please see accessories
Entry 1 type	Polyamide cable gland	Polyamide cable gland	
Entry 1	M32 x 1,5	M32 x 1,5	M32 x 1,5
Entry 1 clamping range	9 ... 21 mm	9 ... 21 mm	
Metal entry possible 1	No	No	Yes
Entry 2	8290/3-M32	8161/7-M25-1707 with plug	8290/3-M32

Wall-Mounting Sockets
Series 8571/11 SolConeX 32 A

Technical Data

Variant	8571/11-...	8571/11-...-S001	8571/11-...-S012
Components			
Entry 2 type	Polyamide stopping plug	Polyamide cable gland	Polyamide stopping plug
Entry 2	M32 x 1,5	M25 x 1,5	M32 x 1,5
Entry 2 clamping range		7 – 17 mm	
Metal entry possible 2	No	No	Yes
Notes	Metal insert: Contains a brass plate with threaded holes Cable gland position: Bottom (standard); optionally also possible on the top or lateral		

You can find more technical data online at r-stahl.com

Accessories

Figure	Description	Art. No.	Listprice €	PS	Weight kg
Auxiliary contact					
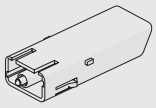	1 NC max. 500 V AC, max. 110 V DC max. 6 A 2 x 0.5 ... 2.5 mm² solid / finely stranded	150680	46.50	Z1	0.125
	1 NC, gold contact max. 500 V AC, max. 110 V DC max. 6 A 2 x 0.5 ... 2.5 mm² solid / finely stranded	150684	78.50	Z1	0.125
	1 NO max. 500 V AC, max. 110 V DC max. 6 A 2 x 0.5 ... 2.5 mm² solid / finely stranded	150682	46.50	Z1	0.125
	1 NO, gold contact max. 500 V AC, max. 110 V DC max. 6 A 2 x 0.5 ... 2.5 mm² solid / finely stranded	150686	78.50	Z1	0.125

Dimensional Drawings (All Dimensions in mm [inches]) – Subject to Alterations

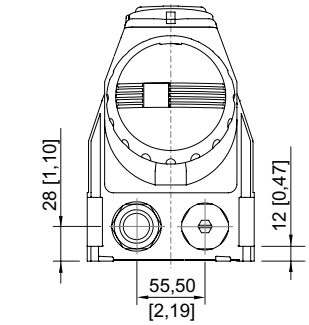

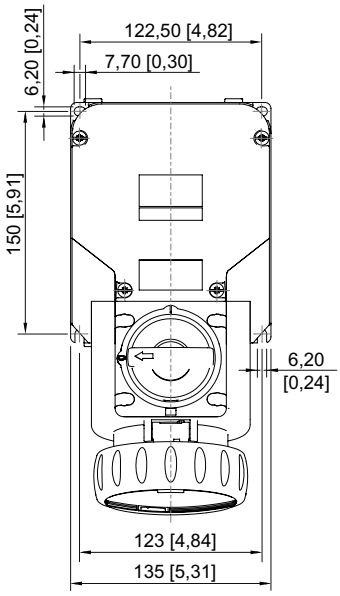

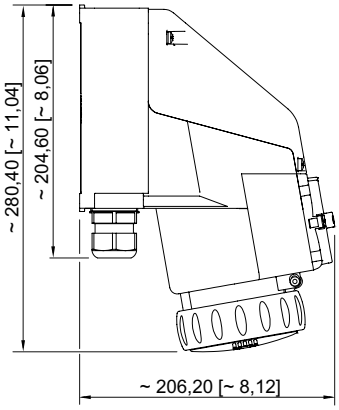

Wall-mounting socket

Arrangement of the Earth Contact Sleeves

Example:
Clock hour position,
Front view of socket

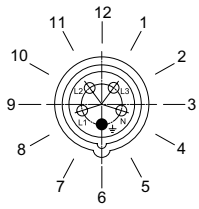

Example:
Clock hour position

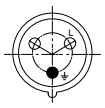

230 V = 6 h

Marking of connections
Front view of socket

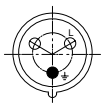

2 P + PE



3 P + PE



3 P + N + PE

E3



- Full compatibility between SolConeX and CES devices
- Wide temperature range for use
- High mechanical impact and shock resistance
- Perfect protection against the ingress of liquids and dust
- 3D data available to download from the website

WebCode 8571E

R. STAHL Series 8571/12 SolConeX plugs for Zone 1/21 are 4- or 5-pole versions up to 32 A. The floating pins allow them to be inserted and removed quickly and easily. The pivoting strain relief makes it easier to install the cable. Self-cleaning and corrosion-free plug pins made from high-quality materials ensure optimum electrical contact.

	IECEx / ATEX					
Zone	0	1	2	20	21	22
Installation in		•	•		•	•

E3

Selection Table

Product Description Rated operational current			Plug 32 A							
Figure	Detailed number of poles	Coding (clock hour position)	Rated operational voltage AC	Colour code	Frequency range	Product Type	Art. No.	Listprice €	PS	Weight kg
	3 P + N + PE	5	347/600 ... 400/690 V AC	Black	50 / 60 Hz	8571/12-505	150877	193.40	10	0.600
		6	200/346 ... 240/415 V AC	Red	50 / 60 Hz	8571/12-506	150855▲	193.40	10	0.600
		7	277/480 ... 288/500 V AC	Black	50 / 60 Hz	8571/12-507	150864	193.40	10	0.600
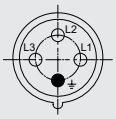	3 P + PE	5	600 ... 690 V AC	Black	50 / 60 Hz	8571/12-405	150903	176.40	10	0.500
		6	380 ... 415 V AC	Red	50 / 60 Hz	8571/12-406	150891▲	176.40	10	0.500
		7	480 ... 500 V AC	Black	50 / 60 Hz	8571/12-407	150895▲	176.40	10	0.500
		9	200 ... 250 V AC	Blue	50 / 60 Hz	8571/12-409	150899▲	176.40	10	0.500
		11	440 ... 460 V AC	Red	60 Hz	8571/12-411	150911	176.40	10	0.500

Technical Data

Explosion Protection	
IECEx gas explosion protection	Ex db eb IIC T6 ... T5 Gb
IECEx dust explosion protection	Ex tb IIIC T60 °C ... T75 °C Db
ATEX gas explosion protection	Ⓔx II 2 G Ex db eb IIC T6 ... T5 Gb
ATEX dust explosion protection	Ⓔx II 2 D Ex tb IIIC T60 °C ... T75 °C Db
Certificates	ATEX (PTB), Brazil (ULB), EAC (ENDCE), IECEx (PTB), India (PESO), Korea (KGS), Taiwan (ITRI)
Notes	CCC certificate available from 2021 onward
Explosion protection note	Product label may vary. Series devices have certification according to ATEX and IECEX.

Technical Data

Electrical Data	
Rated operational current	max. 32 A
Notes	The current must be reduced to 25 A for frequencies > 100 Hz
Ambient Conditions	
Ambient temperature	-30 °C ... +40 °C (T6) -30 °C ... +55 °C (T5)
Notes	Variants with a temperature range from -50 to +55 °C available on request; silicone as sealing material For further information, see the operating instructions.
Mechanical Data	
Degree of protection (IP)	IP66
Degree of protection note	according to IEC/EN 60529
Enclosure material	Polyamide, Glass fibre reinforced
Silicone-free	Yes
Finely stranded connection terminals	1 x 2.5 mm² ... 1 x 10 mm²
Components	
Cable diameter	13 … 25 mm

Spare Parts

Figure	Description	Art. No.	Listprice €	PS	Weight kg
Protective cap for plugs 32 A					
	4 pole	150856	32.90	E1	0.070
	5 pole	150865	34.80	E1	0.077

E3

Dimensional Drawings (All Dimensions in mm [inches]) – Subject to Alterations

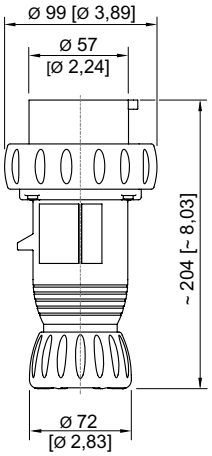

Plug 3 P + PE

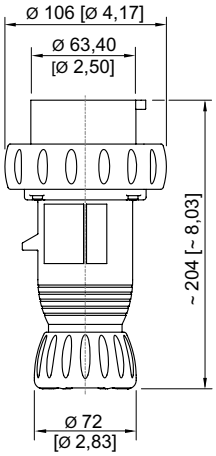

Plug 3 P + N + PE

Arrangement of the Earth Contact Sleeves

Example:
Clock hour position,
Front view of plug

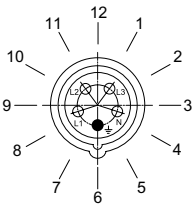

Example:
Clock hour position

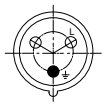

230 V = 6 h

Marking of connections
Front view of plug

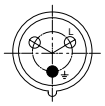

2 P + PE



3 P + PE



3 P + N + PE

E3



- Reliable load disconnect switch with easily visible, lockable handle and switching position display
- An integrated auxiliary contact for control and signalling purposes, can optionally be enhanced with pluggable, easily retrofittable Ex e or Ex i auxiliary contacts
- Wide temperature range for use
- High mechanical impact and shock resistance
- Perfect protection against the ingress of liquids and dust
- 3D data available to download from the website

WebCode **8579A**

R. STAHL Series 8579/31 CES sockets for Zone 1/21 in a 4- and 5-pole version have full AC-3 switching capacity up to 63 A. The high degree of protection IP66 guarantees the highest level of protection against the penetration of dust and water in any application position. Self-cleaning lamellar contacts provide optimum contact and the plugs can be inserted and removed in the zero position quickly and easily. The load disconnect switch, with mechanical locking device and a handle that can be locked in the 0 or I position, is an additional safety feature.

	IECEx / ATEX					
Zone	0	1	2	20	21	22
Installation in		•	•		•	•

E3

Selection Table

Product Description: Wall socket 63 A
Auxiliary contacts: 2 (1 NO + 1 NC)

Figure	Detailed number of poles	Coding (clock hour position)	Rated operational voltage AC	Colour code	Frequency range	Product Type	Art. No.	Listprice €	PS	Weight kg
	3 P + N + PE	5	347/600 ... 400/ 690 V AC	Black	50 / 60 Hz	8579/31-505	270899	2484.10	10	8.200
		6	200/346 ... 240/ 415 V AC	Red	50 / 60 Hz	8579/31-506	270900	2382.80	10	8.200
		7	277/480 ... 288/ 500 V AC	Black	50 / 60 Hz	8579/31-507	270901	2382.80	10	8.200
		9	120/208 ... 144/ 250 V AC	Blue	50 / 60 Hz	8579/31-509	270902	2484.10	10	8.200
		11	250/440 ... 265/ 460 V AC	Red	60 Hz	8579/31-511	270903	2382.80	10	8.200
	3 P + PE	5	600 ... 690 V AC	Black	50 / 60 Hz	8579/31-405	270904	2305.70	10	7.800
		6	380 ... 415 V AC	Red	50 / 60 Hz	8579/31-406	270905	2305.70	10	7.800
		7	480 ... 500 V AC	Black	50 / 60 Hz	8579/31-407	270906	2305.70	10	7.800
		9	200 ... 250 V AC	Blue	50 / 60 Hz	8579/31-409	270907	2403.70	10	7.800
		11	440 ... 460 V AC	Red	60 Hz	8579/31-411	270908	2305.70	10	7.800

Technical Data

Explosion Protection	
IECEx gas explosion protection	Ex db eb IIC T6 ... T5 Gb
IECEx dust explosion protection	Ex tb IIIC T60 °C ... T75 °C Db

Technical Data	
Explosion Protection	
ATEX gas explosion protection	Ⓔx II 2 G Ex db eb IIC T6 ... T5 Gb
ATEX dust explosion protection	Ⓔx II 2 D Ex tb IIIC T60 °C ... T75 °C Db
Certificates	ATEX (PTB), Brazil (ULB), IECEx (PTB), Korea (KGS), Taiwan (ITRI)
Notes	CCC certificate available from 2021 onward
Explosion protection note	Product label may vary. Series devices have certification according to ATEX and IECEX.
Electrical Data	
Rated operational current	max. 63 A
Switching capacity main contacts	AC-3 690 V, 63 A 18.5 kW: 220 / 230 / 240 V 30 kW: 380 / 400 / 415 V 37 kW: 500 V 55 kW: 690 V
Device Specific Data	
Back-up fuse with thermal protection	80 A gG
Back-up fuse w/o thermal protection	63 A gG
Ambient Conditions	
Ambient temperature	-45 °C ... +40 °C (T6) -45 °C ... +55 °C (T5)
Notes	For further information, see the operating instructions.
Mechanical Data	
Degree of protection IP (IEC 60529)	IP66
Enclosure material	Polyester, Glass fibre reinforced
Silicone-free	No
Finely stranded connection terminals	1 x 16 mm² ... 1 x 50 mm²
Stranded connection terminals	1 x 16 mm² ... 1 x 50 mm²
Impact strength (IEC 60079)	7 J
Impact strength (IEC 62262)	IK10
Lockable in	in 0- and I-position
Components	
Cable entry note	Entry 1: Lower left Entry 2: Lower right
Entry 1	8161/7-M50-3516-LT
Entry 1 type	Polyamide cable gland
Entry 1	M50 x 1,5
Entry 1 clamping range	16 … 35 mm
Metal entry possible 1	No
Entry 2	8290/3-M25
Entry 2 type	Polyamide stopping plug
Entry 2	M25 x 1,5
Metal entry possible 2	No
Notes	Cable gland position: Bottom (standard); optionally also possible on the top or lateral

Accessories

Figure	Description	Art. No.	Listprice €	PS	Weight kg
Auxiliary contact					
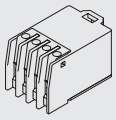	2 NC contacts (8080/1-3) 250 V AC/DC max. 6 A 1.5 ... 2.5 mm² solid / finely stranded The switching function of the auxiliary contact depends on the installation slot used. Left and right: synchronising	168356	55.90	Z1	0.026
	1 NC contact + 1 NO contact (8080/1-1) 250 V AC/DC max. 6 A 1.5 ... 2.5 mm² solid / finely stranded The switching function of the auxiliary contact depends on the installation slot used. Left: delayed (ON), leading (OFF) Right: synchronising	168351	55.90	Z1	0.026
	2 NO contacts (8080/1-4) 250 V AC/DC max. 6 A 1.5 ... 2.5 mm² solid / finely stranded The switching function of the auxiliary contact depends on the installation slot used. Left and right: synchronising	168353	55.90	Z1	0.026
Stopping plug					
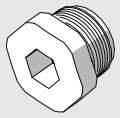	8290/3-M25, 1 piece	143524▲	4.70	10	0.007

Dimensional Drawings (All Dimensions in mm [inches]) – Subject to Alterations

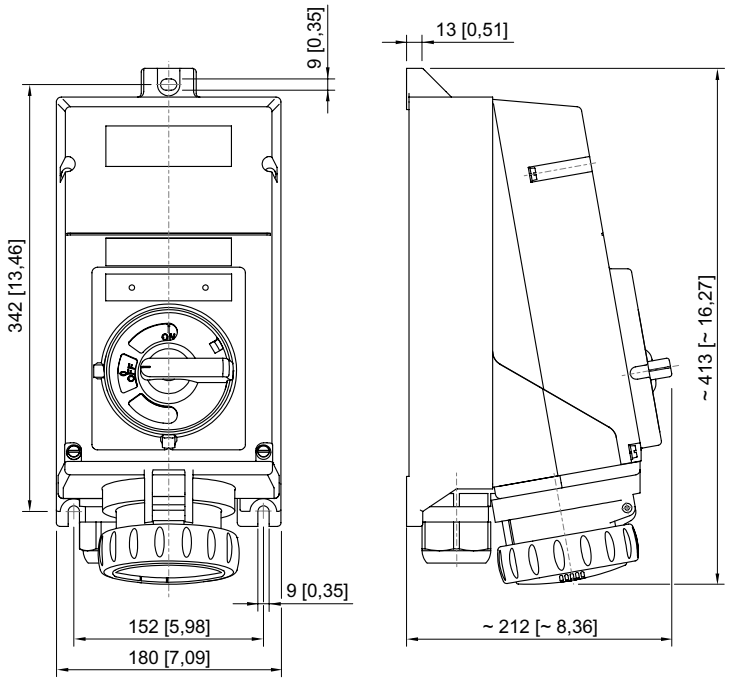

Wall-mounting socket

E3

Arrangement of the Earth Contact Sleeves

Example:
Clock hour position,
Front view of socket

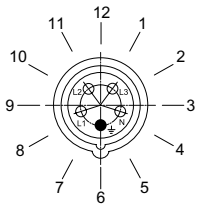

Example:
Clock hour position

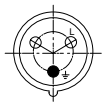

230 V = 6 h

Marking of connections
Front view of socket



3 P + PE



3 P + N + PE

E3



- Wide temperature range for use
- High mechanical impact and shock resistance
- Perfect protection against the ingress of liquids and dust
- 3D data available to download from the website

WebCode 8579E

R. STAHL Series 8579/12 CES plugs for Zone 1/21 are 4- or 5-pole versions up to 63 A. The floating pins allow them to be inserted and removed quickly and easily. The pivoting strain relief makes it easier to install the cable. Self-cleaning and corrosion-free plug pins made from high-quality materials ensure optimum electrical contact.

	IECEx / ATEX					
Zone	0	1	2	20	21	22
Installation in		•	•		•	•

E3

Selection Table

Product Description: Plug
Rated operational current: 63 A

Figure	Detailed number of poles	Coding (clock hour position)	Rated operational voltage AC	Colour code	Frequency range	Product Type	Art. No.	Listprice €	PS	Weight kg
	3 P + N + PE	5	347/600 ... 400/ 690 V AC	Black	50 / 60 Hz	8579/12-505	270909	745.40	10	0.940
		6	200/346 ... 240/ 415 V AC	Red	50 / 60 Hz	8579/12-506	270910	695.00	10	0.940
		7	277/480 ... 288/ 500 V AC	Black	50 / 60 Hz	8579/12-507	270911	695.00	10	0.940
		9	120/208 ... 144/ 250 V AC	Blue	50 / 60 Hz	8579/12-509	270912	745.40	10	0.940
		11	250/440 ... 265/ 460 V AC	Red	60 Hz	8579/12-511	270913	675.50	10	0.940
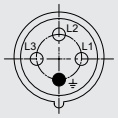	3 P + PE	5	600 ... 690 V AC	Black	50 / 60 Hz	8579/12-405	270914	632.00	10	0.880
		6	380 ... 415 V AC	Red	50 / 60 Hz	8579/12-406	270915	632.00	10	0.880
		7	480 ... 500 V AC	Black	50 / 60 Hz	8579/12-407	270916	632.00	10	0.880
		9	200 ... 250 V AC	Blue	50 / 60 Hz	8579/12-409	270917	659.00	10	0.880
		11	440 ... 460 V AC	Red	60 Hz	8579/12-411	270918	632.00	10	0.880

Technical Data

Explosion Protection	
IECEx gas explosion protection	Ex db eb IIC T6 ... T5 Gb
IECEx dust explosion protection	Ex tb IIIC T60 °C ... T75 °C Db
ATEX gas explosion protection	Ⓔx II 2 G Ex db eb IIC T6 ... T5 Gb
ATEX dust explosion protection	Ⓔx II 2 D Ex tb IIIC T60 °C ... T75 °C Db

Plugs
Series 8579/12 CES 63 A

Technical Data	
Explosion Protection	
Certificates	ATEX (PTB), Brazil (ULB), IECEx (PTB), Korea (KGS), Taiwan (ITRI)
Notes	CCC certificate available from 2021 onward
Explosion protection note	Product label may vary. Series devices have certification according to ATEX and IECEX.
Electrical Data	
Rated operational current	max. 63 A
Ambient Conditions	
Ambient temperature	-45 °C ... +40 °C (T6) -45 °C ... +55 °C (T5)
Notes	For further information, see the operating instructions.
Mechanical Data	
Degree of protection (IP)	IP66
Degree of protection note	according to IEC/EN 60529
Enclosure material	Polyamide
Silicone-free	No
Finely stranded connection terminals	1 x 2.5 mm² ... 1 x 16 mm²
Components	
Cable diameter	24 … 36 mm

Spare Parts

Figure	Description	Art. No.	Listprice €	PS	Weight kg
Protective cap for plugs 63 A					
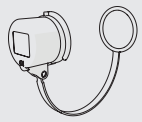	4-/5-poles	153261	82.80	E1	0.100

Dimensional Drawings (All Dimensions in mm [inches]) – Subject to Alterations

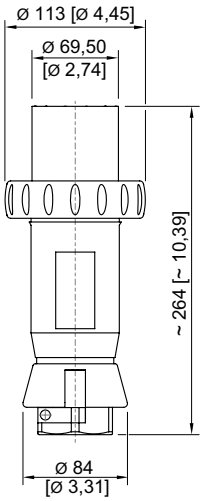

Arrangement of the Earth Contact Sleeves

Example:
Clock hour position,
Front view of plug

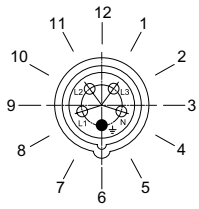

Example:
Clock hour position

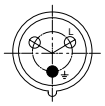

230 V = 6 h

Marking of connections
Front view of plug



3 P + PE



3 P + N + PE

E3

Maintenance Socket
Series 8570/51



- The 16 A repair sockets of the 8570 SolConeX and CES series are used to carry out maintenance and repair work in potentially explosive atmospheres in which non-explosion-proof devices are used
- Padlockable switch to protect against unauthorised use
- With "Do not switch on if explosion hazard exists" warning sign
- Full compatibility between SolConeX and industrial devices

WebCode **8570C**

R. STAHL Series 8570/51 SolConeX repair sockets are used for repair work with non-Ex devices (according to IEC/EN 60309) in Zones 1, 2, 21 and 22. They offer full AC-3 switching capacity up to 16 A and can switch motors/pumps, etc. directly. The indicator lamps displaying the operating status and the large handle, which can be locked in the zero position to protect against unauthorised use, provide added safety.

	IECEx / ATEX					
Zone	0	1	2	20	21	22
Installation in		•	•		•	•

Selection Table

Product Description Rated operational current			Maintenance socket no mechanical locking device with indicator lamp 16 A							
Figure	Detailed number of poles	Coding (clock hour position)	Rated operational voltage	Colour code	Frequency range	Product Type	Art. No.	Listprice €	PS	Weight kg
	2 P + PE	6	200 ... 250 V AC	Blue	50 / 60 Hz	8570/51-306	150643	558.90	10	2.000
	3 P + N + PE	6	200/346 ... 240/415 V AC	Red	50 / 60 Hz	8570/51-506	150641	639.70	10	2.000

Technical Data

Explosion Protection	
ATEX gas explosion protection	Ⓔx II 2 G Ex db eb IIC T6 Gb
ATEX dust explosion protection	Ⓔx II 2 D Ex tb IIIC T80 °C Db
Certificates	ATEX (PTB)
Ambient Conditions	
Ambient temperature	-30 °C ... +55 °C
Mechanical Data	
Degree of protection (IP)	IP66
Degree of protection note	acc. to IEC 60529
Enclosure material	Polyamide, Glass fibre reinforced
Silicone-free	Yes

Technical Data	
Mechanical Data	
Solid connection terminals	1 x 1.5 mm² ... 2 x 6 mm²
Finely stranded connection terminals	1 x 1.5 mm² ... 2 x 4 mm²
Lockable in	in 0- and I-position
Components	
Cable entry note	Entry 1: Lower left Entry 2: Lower right
Entry 1	8161/7-M25-1707
Entry 1 type	Polyamide cable gland
Entry 1	M25 x 1.5
Entry 1 clamping range	7 … 17 mm
Entry 2	8290/3-M25
Entry 2 type	Polyamide stopping plug
Entry 2	M25 x 1.5

Dimensional Drawings (All Dimensions in mm [inches]) – Subject to Alterations

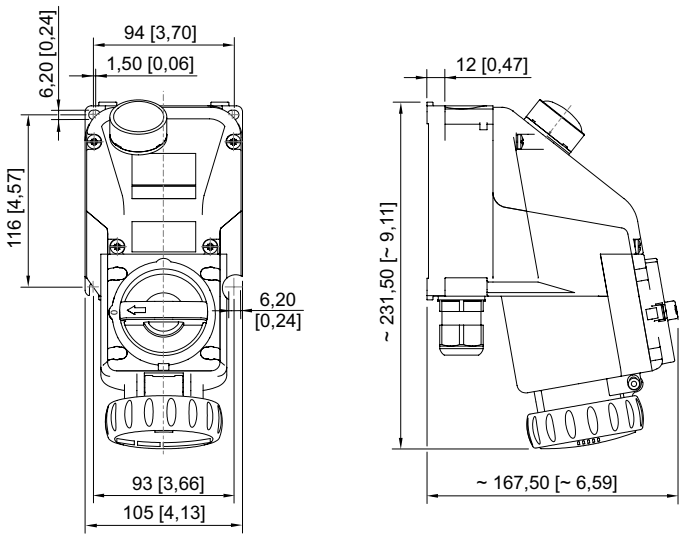

Maintenance socket 5-pole

E3

Maintenance Socket

Series 8570/51

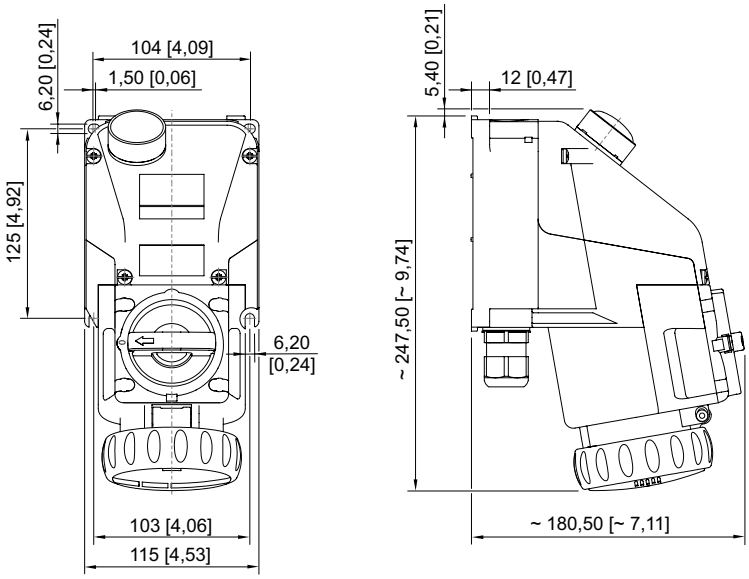

Maintenance socket 3-pole



- The 32 A repair sockets of the 8571 SolConeX and CES series are used to carry out maintenance and repair work in potentially explosive atmospheres in which non-explosion-proof devices are used
- AC-3 motor switching capacity according to IEC/EN 60947-3
- With "Do not switch on if explosion hazard exists" warning sign
- Full compatibility between SolConeX and industrial devices

WebCode 8571C

R. STAHL Series 8571/51 SolConeX repair sockets are used for repair work with non-Ex devices (according to IEC/EN 60309) in Zones 1, 2, 21 and 22. They offer full AC-3 switching capacity up to 32 A and can switch motors/pumps, etc. directly. The indicator lamps displaying the operating status and the large handle, which can be locked in the zero position to protect against unauthorised use, provide added safety.

	IECEx / ATEX					
Zone	0	1	2	20	21	22
Installation in		•	•		•	•

Selection Table

Product Description: Maintenance socket no mechanical locking device with indicator lamp
Rated operational current: 32 A

Figure	Detailed number of poles	Coding (clock hour position)	Rated operational voltage	Colour code	Frequency range	Product Type	Art. No.	Listprice €	PS	Weight kg
	3 P + N + PE	6	200/346 ... 240/ 415 V AC	Red	50 / 60 Hz	8571/51-506	150939	961.70	10	2.000

Technical Data

Explosion Protection	
ATEX gas explosion protection	⟨Ex⟩ II 2 G Ex db eb IIC T6 ... T5 Gb
ATEX dust explosion protection	⟨Ex⟩ II 2 D Ex tb IIIC T80 °C ... T95 °C Db
Certificates	ATEX (PTB)
Ambient Conditions	
Ambient temperature	-30 °C ... +40 °C (T6) -30 °C ... +55 °C (T5)
Mechanical Data	
Degree of protection (IP)	IP66
Degree of protection note	acc. to IEC 60529
Enclosure material	Polyamide, Glass fibre reinforced
Silicone-free	Yes
Solid connection terminals	1 x 2.5 mm² ... 2 x 10 mm²
Finely stranded connection terminals	1 x 2.5 mm² ... 2 x 6 mm²
Lockable in	in 0- and I-position

Maintenance Socket
Series 8571/51

Technical Data	
Components	
Cable entry note	Entry 1: Lower left Entry 2: Lower right
Entry 1	8161/7-M32-2109
Entry 1 type	Polyamide cable gland
Entry 1	M32 x 1.5
Entry 1 clamping range	9 … 21 mm
Entry 2	8290/3-M32
Entry 2 type	Polyamide stopping plug
Entry 2	M32 x 1.5

Dimensional Drawings (All Dimensions in mm [inches]) – Subject to Alterations

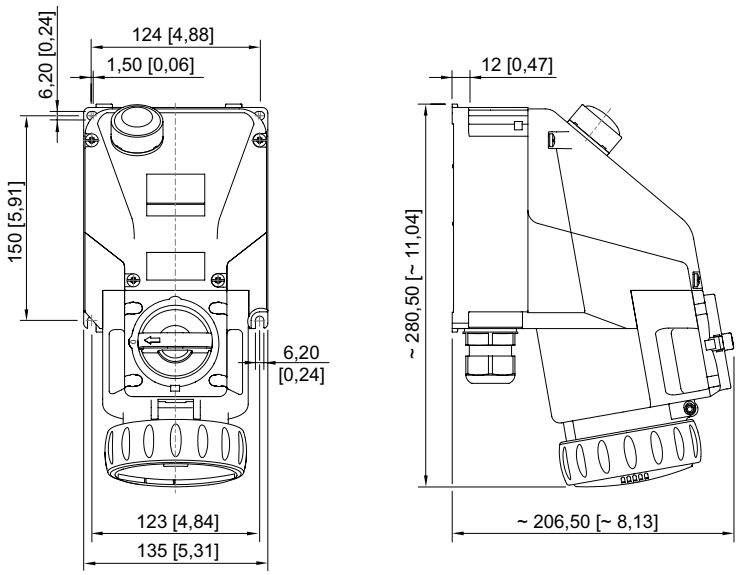

Maintenance socket 5-pole



- The 63 A repair sockets of the 8579 SolConeX and CES series are used to carry out maintenance and repair work in potentially explosive atmospheres in which non-explosion-proof devices are used
- AC-3 motor switching capacity according to IEC/EN 60947-3
- With "Do not switch on if explosion hazard exists" warning sign
- Full compatibility between SolConeX and industrial devices

WebCode **8579B**

R. STAHL Series 8579/61 CES repair sockets are used for repair work with non-Ex devices (according to IEC/EN 60309) in Zones 1, 2, 21 and 22. They offer full AC-3 switching capacity according to IEC/EN 60947-3 up to 63 A. The indicator lamps displaying the operating status and the large switching handle, which can be locked in the zero position to protect against unauthorised use, provide an even higher level of safety.

	IECEx / ATEX					
Zone	0	1	2	20	21	22
Installation in		•	•		•	•

E3

Selection Table

Product Description: Maintenance socket no mechanical locking device with indicator lamp
Rated operational current: 63 A

Figure	Detailed number of poles	Coding (clock hour position)	Rated operational voltage	Colour code	Frequency range	Product Type	Art. No.	Listprice €	PS	Weight kg
	3 P + N + PE	6	200/346 ... 240/ 415 V AC	Red	50 / 60 Hz	8579/61-506	270919	2599.00	10	8.300

Technical Data

Explosion Protection	
IECEx gas explosion protection	Ex db eb IIC T6 ... T5 Gb
IECEx dust explosion protection	Ex tb IIIC T60 °C ... T75 °C Db
ATEX gas explosion protection	Ⓔx II 2 G Ex db eb IIC T6 ... T5 Gb
ATEX dust explosion protection	Ⓔx II 2 D Ex tb IIIC T60 °C ... T75 °C Db
Certificates	ATEX (PTB), IECEx (PTB)
Electrical Data	
Auxiliary contacts	1 NC + 1 NO
Ambient Conditions	
Ambient temperature	-45 °C ... +40 °C (T6) -45 °C ... +55 °C (T5)
Mechanical Data	
Degree of protection (IP)	IP66
Degree of protection note	acc. to IEC 60529
Enclosure material	Polyester, Glass fibre reinforced

Maintenance Socket
Series 8579/61

Technical Data	
Mechanical Data	
Silicone-free	No
Finely stranded connection terminals	1 x 16 mm² ... 1 x 50 mm²
Stranded connection terminals	1 x 16 mm² ... 1 x 50 mm²
Lockable in	in 0- and I-position
Components	
Cable entry note	Entry 1: Lower left Entry 2: Lower right
Entry 1	8161/7-M50-3516
Entry 1 type	Polyamide cable gland
Entry 1	M50 x 1.5
Entry 1 clamping range	16 … 35 mm
Entry 2	8290/3-M25
Entry 2 type	Polyamide stopping plug
Entry 2	M25 x 1.5

Dimensional Drawings (All Dimensions in mm [inches]) – Subject to Alterations

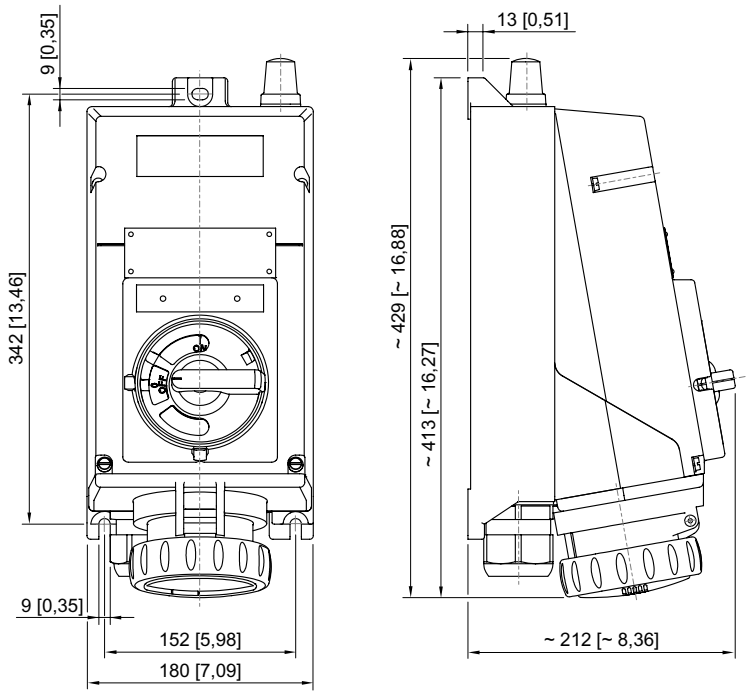

Maintenance socket 5-pole

E3



- Excellent conductivity
- Simple maintenance inside the rollers (no additional encapsulation)
- Resistant to oil and grease
- High mechanical strength
- Compact and robust
- Long service life

WebCode 8580A

The SolConeX cable reel from the 573 Ex series is maintenance- free, and resistant to chemical influences, UV light and weather.
The stable tubular steel frame and halogen-free solid rubber roller body guarantee high mechanical resilience.
The cable reel features a 30 m long PROFLEX electrical line with a plug and is offered in two versions (3- or 5-pole).

	IECEx / ATEX					
Zone	0	1	2	20	21	22
Installation in		•	•			

E3

Selection Table

Number of sockets Conductor length Rated operational current plug		1 20 m 32 A					
Rated operational voltage plug	Coding (clock hour position) plug	Colour code plug	Conductor cross-section	Art. No.	Listprice €	PS	Weight kg
200 / 346 ... 240 / 415 V AC	6	red	5 x 6 mm²	278018	3509.00	16	21.000
Number of sockets Conductor length Rated operational current plug		1 30 m 16 A					
Rated operational voltage plug	Coding (clock hour position) plug	Colour code plug	Conductor cross-section	Art. No.	Listprice €	PS	Weight kg
200 ... 250 V AC	6	blue	3 x 2,5 mm²	278739	2475.90	16	17.000
200 / 346 ... 240 / 415 V AC	6	red	5 x 2,5 mm²	278740	2751.00	16	17.500
Number of sockets Conductor length Rated operational current plug		2 25 m 16 A					
Rated operational voltage plug	Coding (clock hour position) plug	Colour code plug	Conductor cross-section	Art. No.	Listprice €	PS	Weight kg
200 ... 250 V AC	6	blue	3 x 2,5 mm²	278017	2825.00	16	17.000
200 / 346 ... 240 / 415 V AC	6	red	5 x 2,5 mm²	278016	3105.00	16	–

Technical Data

Variant	278739	278740	278017	278016	278018
Explosion Protection					
ATEX gas explosion protection	II 2 G Ex db eb IIC T6	II 2 G Ex db eb IIC T6	II 2 G Ex db eb IIC T6	II 2 G Ex db eb IIC T6	II 2 G Ex db eb IIC T6

Cable Reel SolConeX
Series 573 Ex

Technical Data

Variant	278739	278740	278017	278016	278018
Ambient Conditions					
Ambient temperature	-20 °C ... +40 °C	-20 °C ... +40 °C	-20 °C ... +40 °C	-20 °C ... +40 °C	-20 °C ... +40 °C
Mechanical Data					
Enclosure material cable reel	Butyl rubber	Butyl rubber	Butyl rubber	Butyl rubber	Butyl rubber
Degree of protection (IP)	IP66	IP66	IP66	IP66	IP66
Protection class	II	II	II	II	II
Conductor cross-section	3 x 2,5 mm²	5 x 2,5 mm²	3 x 2,5 mm²	5 x 2,5 mm²	5 x 6 mm²
Type of line	PROFLEXX H07RN-F	PROFLEXX H07RN-F	PROFLEXX H07RN-F	PROFLEXX H07RN-F	PROFLEXX H07RN-F
Width	370 mm	370 mm	370 mm	370 mm	370 mm
Height	532 mm	532 mm	532 mm	532 mm	532 mm
Depth	408 mm	408 mm	408 mm	408 mm	408 mm
Components					
Enclosure material plug	Polyamide, glass fibre reinforced	Polyamide, glass fibre reinforced	Polyamide, glass fibre reinforced	Polyamide, glass fibre reinforced	Polyamide, glass fibre reinforced
No. of poles plug	3	5	3	5	5
Frequency plug	50 / 60 Hz	50 / 60 Hz	50 / 60 Hz	50 / 60 Hz	50 / 60 Hz
Enclosure material socket	Polyamide, glass fibre reinforced	Polyamide, glass fibre reinforced	Polyamide, glass fibre reinforced	Polyamide, glass fibre reinforced	Polyamide, glass fibre reinforced
No. of poles socket 1	3	5	3	3	5
Rated operational current socket 1	16 A	16 A	16 A	16 A	32 A
Rated operational voltage socket 1	200 ... 250 V AC	200 / 346 ... 240 / 415 V AC	200 ... 250 V AC	200 ... 250 V AC	200 / 346 ... 240 / 415 V AC
Frequency socket 1	50 / 60 Hz	50 / 60 Hz	50 / 60 Hz	50 / 60 Hz	50 / 60 Hz
Coding socket 1	6	6	6	6	6
Colour code socket 1	blue	red	blue	blue	red
Enclosure material socket 2			Polyamide, glass fibre reinforced	Polyamide, glass fibre reinforced	
No. of poles socket 2			3	5	
Rated operational current socket 2			16 A	16 A	
Rated operational voltage socket 2			200 ... 250 V AC	200 / 346 ... 240 / 415 V AC	
Frequency socket 2			50 / 60 Hz	50 / 60 Hz	
Coding socket 2			6	6	
Colour code socket 2			blue	red	

E3

Spare Parts

Figure	Description	Art. No.	Listprice €	PS	Weight kg
Protective cap for plugs 16 A					
	3 pole	150496	27.90	E1	0.043





CONTROL DEVICES

Product	Installation in Zone 0	1	2	20	21	22	Series	Page	WebCode
Control Devices for Panel Mounting									
Control Buttons / Switches for Panel Mounting Plug-in Connection with Connection Line and Connection Chamber		•	•		•	•	8003	364	8003D
Control Buttons / Switches for Panel Mounting Spring Clamp Terminals with Connection Chamber		•	•		•	•	8003	359	8003A
LED Illuminated Pushbutton for Panel Mounting		•	•		•	•	8018	371	8018A
LED Indicating Lamps for Panel Mounting with Connection Chamber		•	•		•	•	8013	369	8013A
Control Equipment for Surface Mounting									
Control Device System		•	•		•	•	8040	374	8040B
Motion Sensor									
Motion Sensor		•	•		•	•	8265	381	8265E
Position Switch									
Metal Position Switch		•	•		•	•	8074	337	8074D
Position Switch		•	•		•	•	8060	345	8060B
Position Switch		•	•		•	•	8070	351	8070C
Safety Temperature Monitor and Limiter									
Safety Temperature Monitor and Limiter		•	•		•	•	8146/5	383	8146K

For additional products and information please refer to r-stahl.com



- Operating temperature range: -40 °C to +70 °C
- Large inner connection chamber
- High-quality metal Ex e enclosure with outer PE connection
- Degree of protection IP66/67
- Five different contact versions
- Ten different actuator versions

WebCode **8074D**

Metal position switch; switch dimensions meet the requirements of DIN EN 50041. It is designed to detect the position of moving components. Certified versions fulfil the requirements for safety switches as set out in EN 13849-1 and have positive-opening contacts in accordance with EN 60947-5-1.

	IECEx / ATEX					
Zone	0	1	2	20	21	22
Installation in		•	•		•	•

Selection Table

Actuator		Adjustable rotary lever						
Figure	Contacts	Switching function	Positive opening contact	Product Type	Art. No.	Listprice €	PS	Weight kg
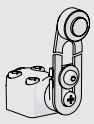	1 NC + 1 NO	Slow-action contact	No	8074/2-1-DS-40	257189▲	435.60	17	0.386
Actuator		Long rotary lever						
Figure	Contacts	Switching function	Positive opening contact	Product Type	Art. No.	Listprice €	PS	Weight kg
	1 NC + 1 NO	Slow-action contact	Yes	8074/2-1-DL-40	257188	429.20	17	0.422
Actuator		Misalignment switch						
Figure	Contacts	Switching function	Positive opening contact	Product Type	Art. No.	Listprice €	PS	Weight kg
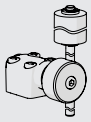	1 NC + 1 NO	Slow-action contact	No	8074/2-1-SR-40	257201	493.10	17	0.486

E4

Metal Position Switch
Series 8074

Selection Table

Figure	Contacts	Switching function	Positive opening contact	Product Type	Art. No.	Listprice €	PS	Weight kg
Actuator		**Parallel roller lever**						
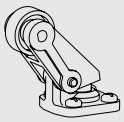	1 NC + 1 NO	Slow-action contact	Yes	8074/2-1-WPH-40	257186	398.50	17	0.307
Actuator		**Plunger**						
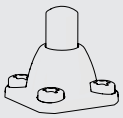	1 NC + 1 NO	Slow-action contact	Yes	8074/2-1-W-40	257197	380.40	17	0.298
Actuator		**Rod lever**						
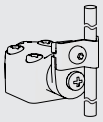	1 NC + 1 NO	Slow-action contact	No	8074/2-1-DD-40	257190	435.60	17	0.340
Actuator		**Roller lever**						
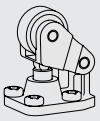	1 NC + 1 NO	Slow-action contact	Yes	8074/2-1-WH-40	257185	415.40	17	0.300
Actuator		**Roller plunger**						
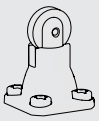	1 NC + 1 NO	Slow-action contact	Yes	8074/2-1-R-40	257184	398.50	17	0.299
Actuator		**Rotary lever**						
	1 NC + 1 NO	Slow-action contact	Yes	8074/2-1-D-40	257187	411.20	17	0.360
Actuator		**Safety switch**						
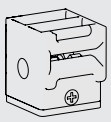	1 NC + 1 NO	Slow-action contact	Yes	8074/2-1-AZ-20	257202	471.80	17	0.340

The actuators enclosed are not mounted.
Actuators without positive opening are not suitable for safety circuits!

Safety switch, separate actuator made of metal (please order separately; see spare parts and accessories)

Technical Data

Variant	8074/2-1-.-..	8074/2-1-AZ-20
Explosion Protection		
IECEx gas explosion protection	Ex de IIC T6/T5 Gb	Ex de IIC T6/T5 Gb
IECEx dust explosion protection	Ex tb IIIC T80 °C ... T95 °C Db	Ex tb IIIC T80 °C ... T95 °C Db
ATEX gas explosion protection	Ⓔx II 2 G Ex de IIC T6/T5 Gb	Ⓔx II 2 G Ex de IIC T6/T5 Gb
ATEX dust explosion protection	Ⓔx II 2 D Ex tb IIIC T80 °C ... T95 °C Db	Ⓔx II 2 D Ex tb IIIC T80 °C ... T95 °C Db
EAC gas explosion protection	1 Ex db e IIC T6 Gb	1 Ex db e IIC T6 Gb
EAC dust explosion protection	Ex tb IIIC T80 °C Db	Ex tb IIIC T80 °C Db
Certificates	ATEX (BVS), EAC (CCVE), IECEx (BVS)	ATEX (BVS), EAC (CCVE), IECEx (BVS)
Notes	Product label may vary. Series devices have certification according to ATEX and IECEX.	
Electrical Data		
Rated operational voltage DC	125 V	230 V
Rated operational voltage AC (equal potential)	500 V	250 V
Rated operational voltage (unequal potential)	250 V	250 V
Rated operational current	4.4 A 6.6 A	0.25 A 6 A
Rated operational current note	4.4 A at T6 6.6 A at T5	0.25 A at 230 V DC 6 A at 250 V AC
Electrical service life	Max. 10^6 operating cycles	Max. 10^6 operating cycles
Mechanical service life	Max. 10^8 operating cycles	Max. 10^8 operating cycles
Rated surge voltage	4 kV	4 kV
Short-circuit protection max.	10 A	10 A
Maximum operating frequency	1800 operating cycles/h	1800 operating cycles/h
Ambient Conditions		
Ambient temperature	-40 °C ... +70 °C (T6) -40 °C ... +70 °C (T5)	-20 °C ... +40 °C (T6) -20 °C ... +60 °C (T5)
Mechanical Data		
Degree of protection IP (IEC 60529)	IP66	IP66
Type of protection (IEC 60529) note	-40 °C	-20 °C
Enclosure material	Corrosion resistant aluminium, powder-coated	Corrosion resistant aluminium, powder-coated
Cover material	1.4401 stainless steel, blaste	1.4401 stainless steel, blaste
Max. earth connection	4 mm²	4 mm²
Contact material	Silver-nickel	Silver-nickel
Connection cross-section finely stranded	0.75 – 2.5 mm²	0.75 – 1.5 mm²
Connection cross-section solid	0.75 – 2.5 mm²	0.75 – 1.5 mm²
Contact system	2-pole, galvanically separated with double break	2-pole, galvanically separated with double break
Contact opening	≥ 1.5 mm (isolating distance ≥ 3 mm)	≥ 1.5 mm (isolating distance ≥ 3 mm)
Components		
Cable entries	1 x M20 Ø 4 – 13 mm	1 x M20 Ø 4 – 13 mm
Material cable gland	Polyamide, Glass fibre reinforced	Polyamide, Glass fibre reinforced

Accessories

Figure	Description	Art. No.	Listprice €	PS	Weight kg
Actuator					
	Angled, for 8074/1-.-ZB	132312	12.00	Z1	0.037

Accessories

Figure	Description	Art. No.	Listprice €	PS	Weight kg
Actuator					
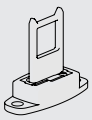	Adjustable, for 8074/1-.-ZB	132313	48.10	Z1	0.035
	Straight, for 8074/1-.-ZB	132311	10.00	Z1	0.028
Cable glands					
	8161/7-M20-1307 7 ... 13 mm², 50 pieces (delivery lot¹)	239172▲	4.20	10	0.013

Spare Parts

Figure	Description	Art. No.	Listprice €	PS	Weight kg
Contact element					
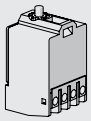	1 NC + 1 NO slow-action contact 8080/1-1	132529	35.00	E1	0.025
Actuator					
	Rotary lever actuator	257533	224.90	E1	0.102
	Long rotary lever actuator	257534	238.10	E1	0.102
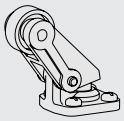	Parallel roller lever actuator	257532	99.50	E1	0.102
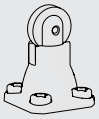	Roller plunger actuator	257520	131.80	E1	0.102
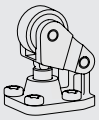	Roller lever actuator	257531	131.80	E1	0.102

Purchase order quantity in [pieces], the delivery quantity is automatically rounded to the lot size.

Dimensional Drawings (All Dimensions in mm [inches]) – Subject to Alterations

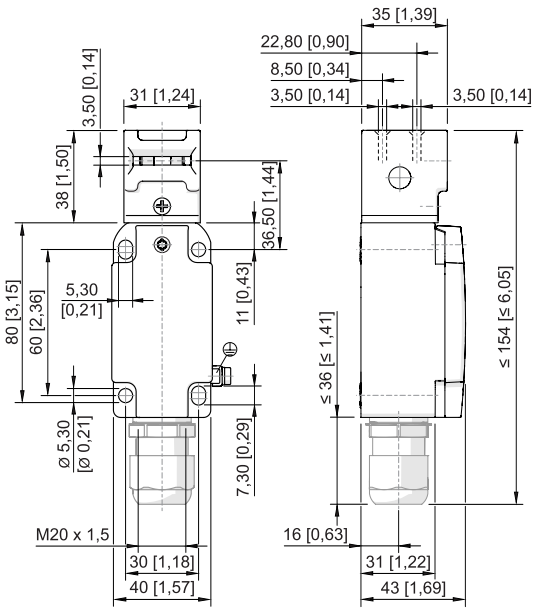

Safety switch 8074/2-.-AZ-20

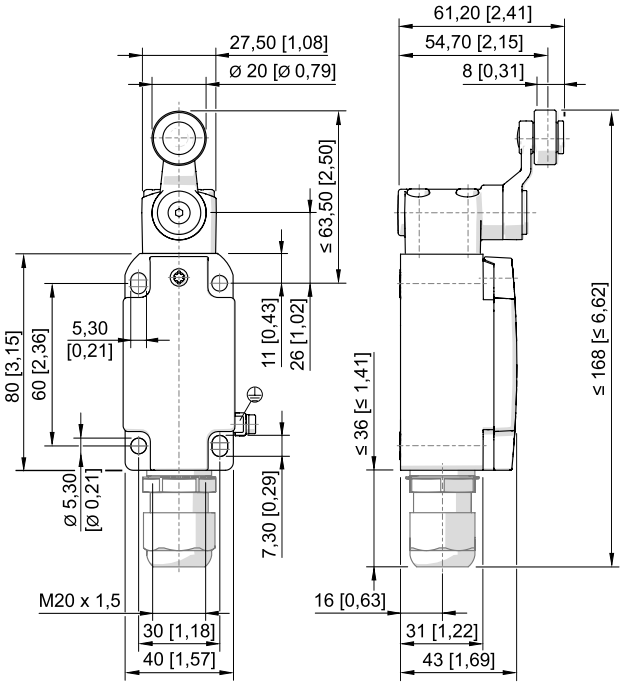

Swivelling lever 8074/2-.-D-40

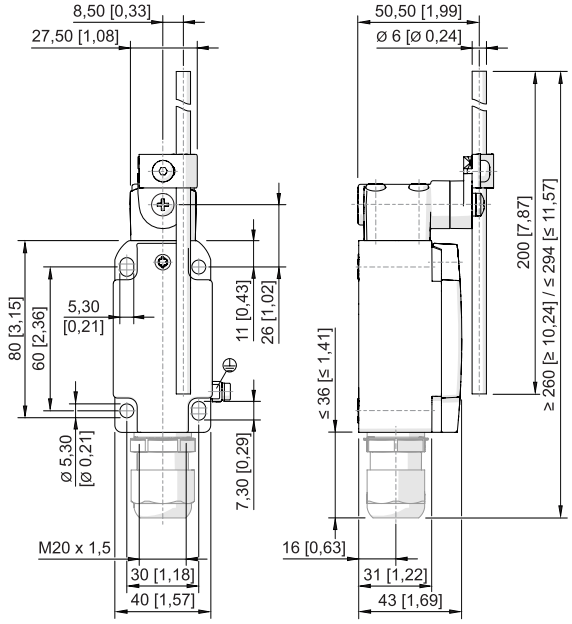

Roller lever 8074/2-.-DD-40

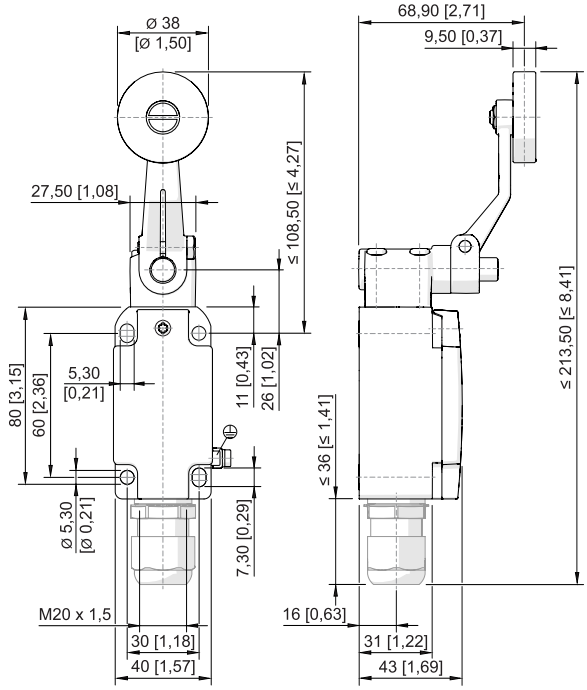

Swivelling lever 8074/2-.-DL-40

E4

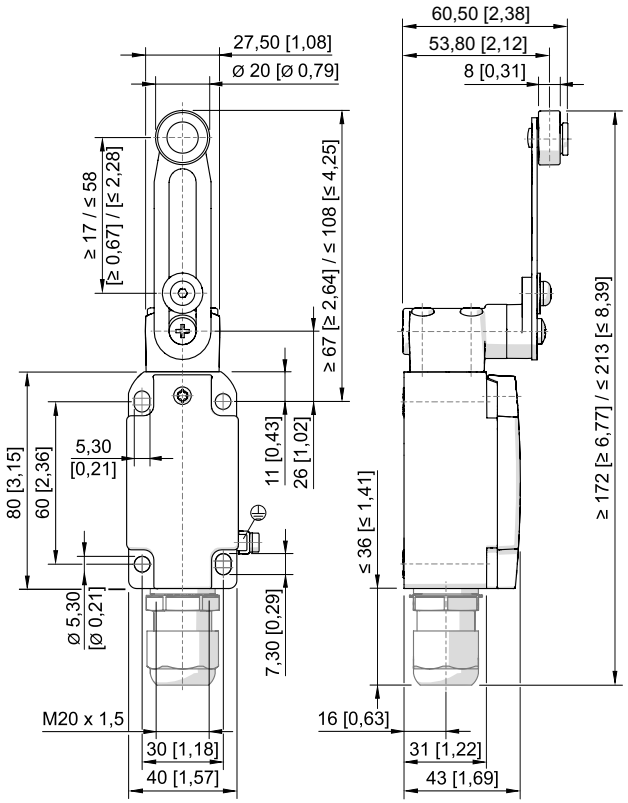

Swivelling lever 8074/2-.-DS-40

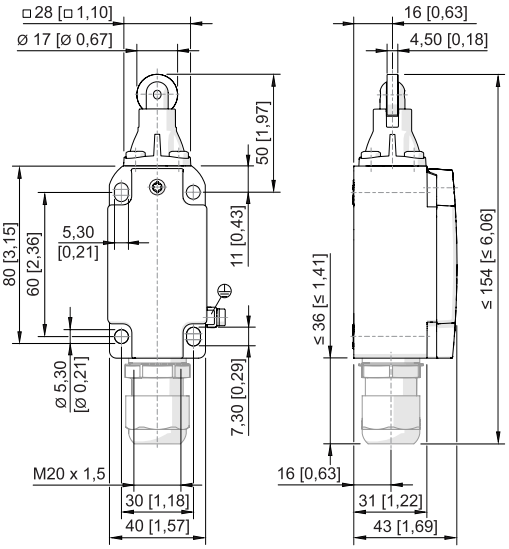

Roller plunger 8074/2-.-R-40

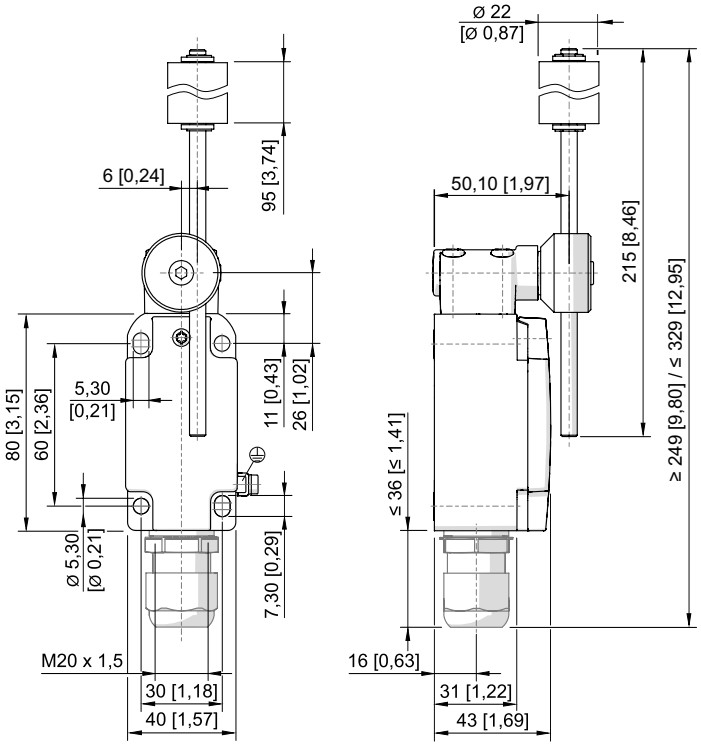

Belt-alignment switch 8074/2-.-SR-40

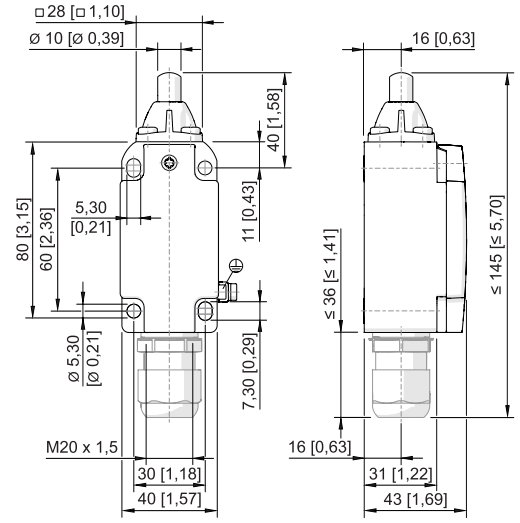

Domed plunger 8074/2-.-W-40

E4

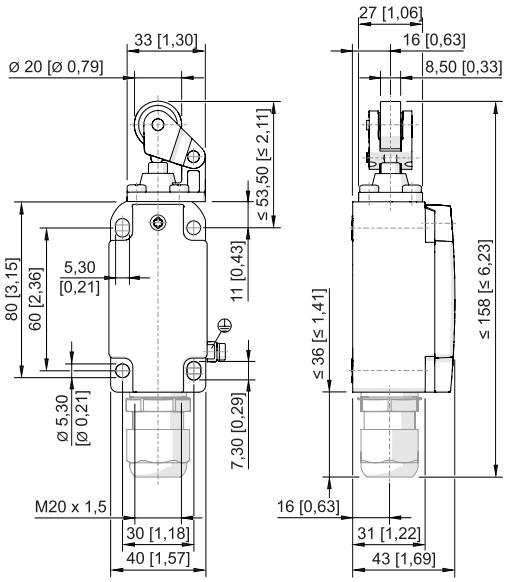

Roller lever 8074/2-.-WH-40

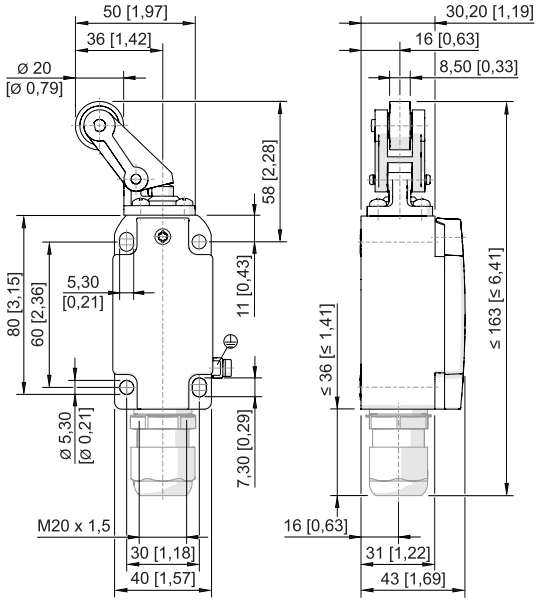

Roller lever 8074/2-.-WPH-40

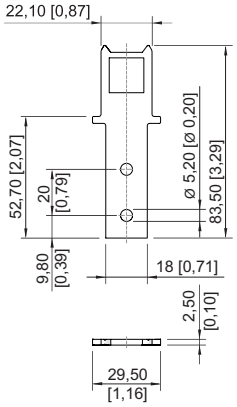

Straight actuator for safety switch

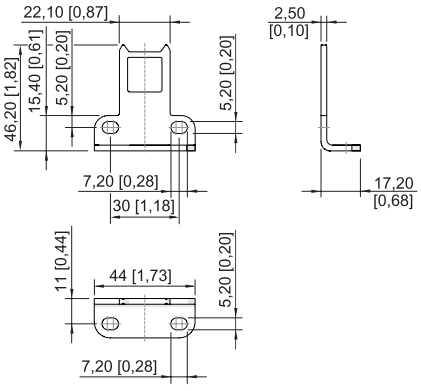

Angled actuator for safety switch

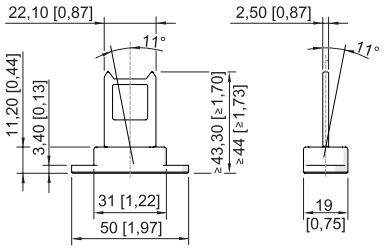

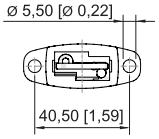

Adjustable actuator for safety switch

E4

Switching Capacity

	Version 8074/2-2-.-..	Version 8074/2-2-AZ-20
AC-12	max. 250 V max. 500 V for equal potential max. 4 A max. 5000 VA	-
AC-15	max. 250 V max. 500 V for equal potential max. 4 A max. 1000 VA	max. 250 V max. 6 A
DC-12	max. 125 V max. 4 A max. 400 W	-
DC-13	-	max. 230 V max. 0.25 A



- Operating temperature range: -60 °C to +60 °C
- Plastic Ex e enclosure
- Degree of protection IP66/67
- Five different contact versions
- Different actuator versions, which can be displaced by 4 x 90°
- Also applicable as simple apparatus

WebCode **8060B**

Plastic position switch; switch dimensions meet the requirements of DIN EN 50047. It is designed to detect the position of moving components. Certified versions fulfil the requirements for safety switches as set out in EN 13849-1 and have positive-opening contacts in accordance with EN 60947-5-1.

	IECEx / ATEX					
Zone	0	1	2	20	21	22
Installation in		•	•		•	•

Selection Table

Actuator		Adjustable rotary lever						
Figure	Contacts	Switching function	Positive opening contact	Product Type	Art. No.	Listprice €	PS	Weight kg
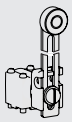	1 NC + 1 NO	Slow-action contact	No	8060/2-1-DS-60	254890	328.30	11	0.130
		Snap-action contact	No	8060/2-2-DS-60	254899	328.30	11	0.130
Actuator		Parallel roller lever						
Figure	Contacts	Switching function	Positive opening contact	Product Type	Art. No.	Listprice €	PS	Weight kg
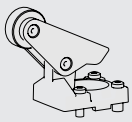	1 NC + 1 NO	Slow-action contact	Yes	8060/2-1-WPH-60	254885	312.40	11	0.102
		Snap-action contact	Yes	8060/2-2-WPH-60	254888	312.40	11	0.102
Actuator		Plunger						
Figure	Contacts	Switching function	Positive opening contact	Product Type	Art. No.	Listprice €	PS	Weight kg
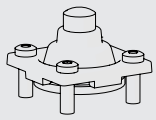	1 NC + 1 NO	Slow-action contact	Yes	8060/2-1-W-60	254793▲	302.80	11	0.096
		Snap-action contact	Yes	8060/2-2-W-60	254799	302.80	11	0.096

▲ Preferred products – in stock or available at short notice

Selection Table

Figure	Contacts	Switching function	Positive opening contact	Product Type	Art. No.	Listprice €	PS	Weight kg
Actuator		**Rod lever**						
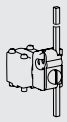	1 NC + 1 NO	Slow-action contact	No	8060/2-1-DD-60	254891	326.20	11	0.133
		Snap-action contact	No	8060/2-2-DD-60	254900	326.20	11	0.133
Actuator		**Roller lever**						
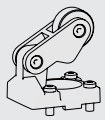	1 NC + 1 NO	Slow-action contact	Yes	8060/2-1-WH-60	254881 ▲	310.30	11	0.101
		Snap-action contact	Yes	8060/2-2-WH-60	254884 ▲	310.30	11	0.101
Actuator		**Roller plunger**						
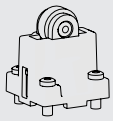	1 NC + 1 NO	Slow-action contact	Yes	8060/2-1-R-60	254794	309.20	11	0.100
		Snap-action contact	Yes	8060/2-2-R-60	254800 ▲	309.20	11	0.100
Actuator		**Rotary lever**						
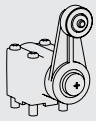	1 NC + 1 NO	Slow-action contact	Yes	8060/2-1-D-60	254889 ▲	325.20	11	0.115
		Snap-action contact	Yes	8060/2-2-D-60	254898 ▲	325.20	11	0.115
Actuator		**Spring rod head**						
	1 NC + 1 NO	Snap-action contact	No	8060/2-2-TK-60	254901	326.20	11	0.122

The actuators enclosed are not mounted.
Actuators without positive opening are not suitable for safety circuits!

Safety switch, separate actuator made of metal (please order separately; see spare parts and accessories)

Technical Data

Explosion Protection	
IECEx gas explosion protection	Ex db eb IIC T6 Gb
IECEx dust explosion protection	Ex tb IIIC T80 °C Db
ATEX gas explosion protection	Ⓔx II 2 G Ex db eb IIC T6 Gb
ATEX dust explosion protection	Ⓔx II 2 D Ex tb IIIC T80 °C Db
EAC gas explosion protection	Ex 1 Ex db e IIC T6 Gb
EAC dust explosion protection	Ex Ex tb IIIC T80 °C Db
Certificates	ATEX (BVS), Canada / USA (CSA), EAC (CCVE), IECEx (BVS), India (PESO), Korea (KGS)
Notes	Product label may vary. Series devices have certification according to ATEX and IECEX.
Electrical Data	
Rated operational voltage DC	125 V
Rated operational voltage AC (equal potential)	500 V

Technical Data

Electrical Data	
Rated operational voltage (unequal potential)	250 V
Rated insulation voltage	500 V
Rated operational current	2 A 4 A
Rated operational current note	(for simple apparatus: 200 mA): inductance L_i and capacitance C_i are negligible
Electrical service life	Max. 10^6 operating cycles
Mechanical service life	Max. 10^6 operating cycles
Rated surge voltage	6 kV
Maximum operating frequency	1800 operating cycles/h
Mechanical Data	
Degree of protection (IP)	IP66
Enclosure material	Thermoplast GF, impact resistant
Cover material	Duroplast GF, impact resistant
Contact material	Silver-nickel
Connection cross-section finely stranded	0.75 – 1.5 mm²
Connection cross-section solid	0.75 – 1.5 mm²
Contact system	2-pole, galvanically separated with double break
Contact opening	≥ 1.5 mm (isolating distance ≥ 3 mm)
Seal	Silicone
Components	
Cable entries	1 x M20 Ø 7 – 13 mm
Material cable gland	Polyamide, Glass fibre reinforced

Accessories

Figure	Description	Art. No.	Listprice €	PS	Weight kg
Actuator					
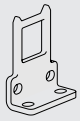	Angled actuator	257053	22.60	Z1	0.040
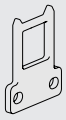	Straight actuator	257052	19.70	Z1	0.040
Cable glands					
	8161/7-M20-1307 7 ... 13 mm², 50 pieces (delivery lot¹)	239172▲	4.20	10	0.013

Spare Parts

Figure	Description	Art. No.	Listprice €	PS	Weight kg
Actuator					
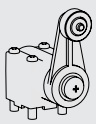	Rotary lever actuator	257057	105.20	E1	0.035

E4

Spare Parts

Figure	Description	Art. No.	Listprice €	PS	Weight kg
Actuator					
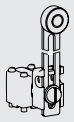	Adjustable rotary lever actuator	257058	126.30	E1	0.020
	Spring rod head actuator	257060	124.10	E1	0.055
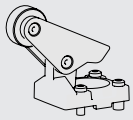	Parallel roller lever actuator	257056	72.70	E1	0.022
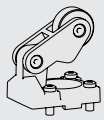	Roller lever actuator	257055	82.60	E1	0.020
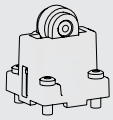	Roller plunger actuator	257054	70.60	E1	0.020
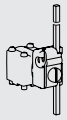	Rod lever actuator	257059	123.00	E1	0.050
Contact element					
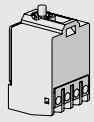	1 NC + 1 NO slow-action contact 8080/1-1	132529	35.00	E1	0.025
	1 NC + 1 NO slow-action contact 8080/1-2	279482	35.00	E1	0.025

Purchase order quantity in [pieces], the delivery quantity is automatically rounded to the lot size.

Dimensional Drawings (All Dimensions in mm [inches]) – Subject to Alterations

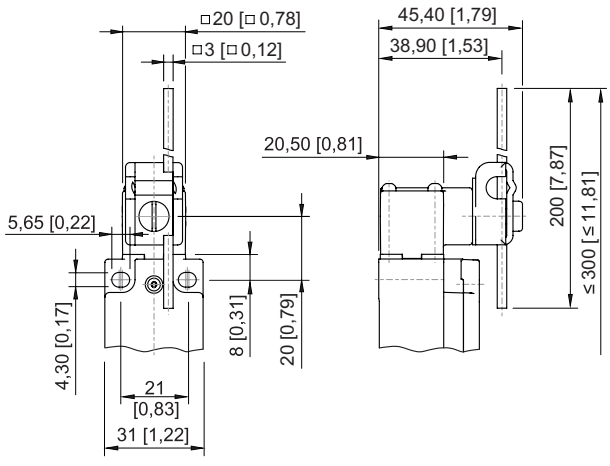

Rod lever 8060/2-.-DD-60

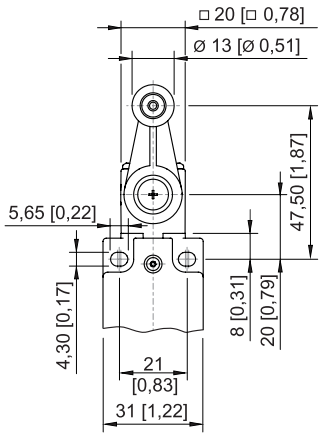

Swivelling lever 8060/2-.-D-60

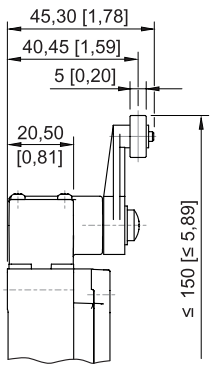

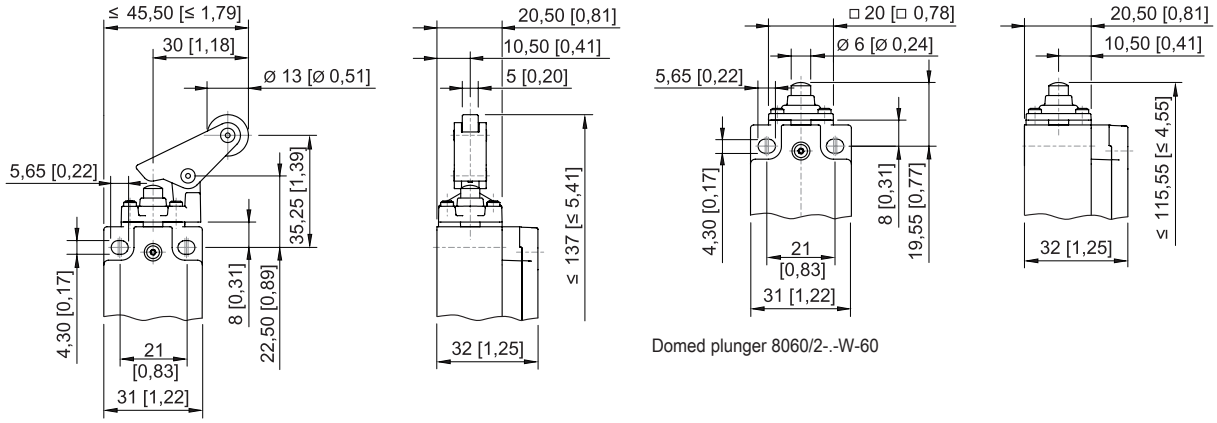

Roller lever 8060/2-.-WPH-60

Domed plunger 8060/2-.-W-60

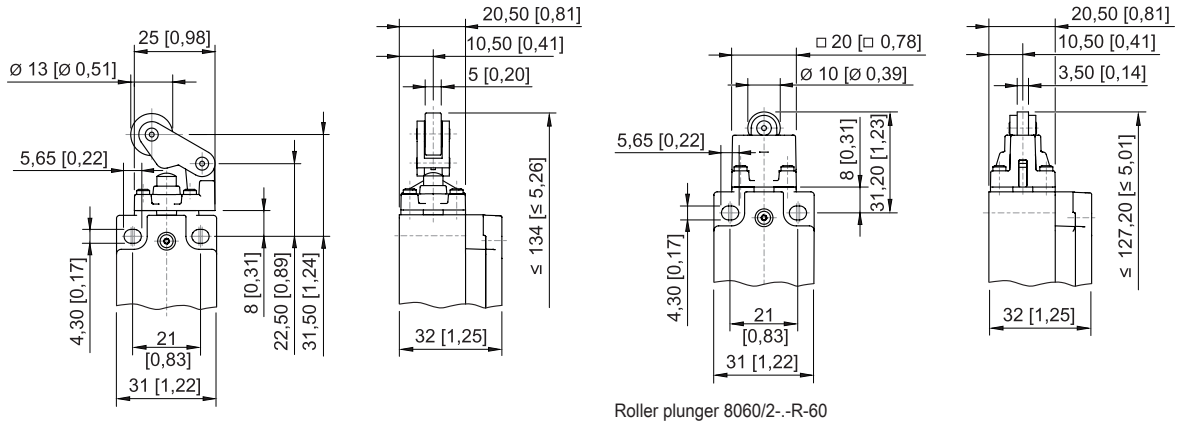

Roller lever 8060/2-.-WH-60

Roller plunger 8060/2-.-R-60

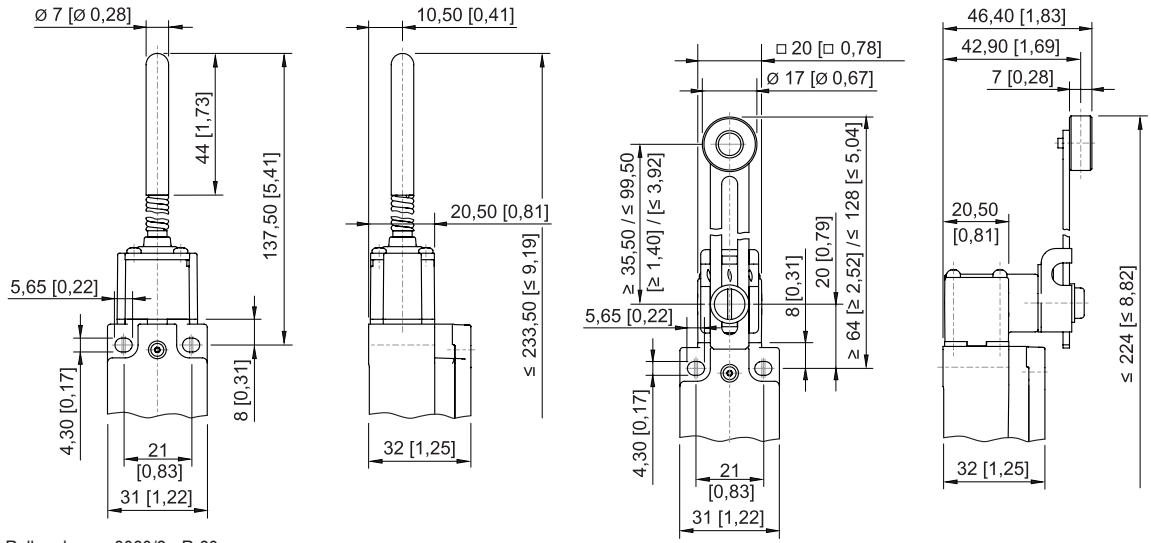

Roller plunger 8060/2-.-R-60

Swivelling lever 8060/2-.-DS-60

E4

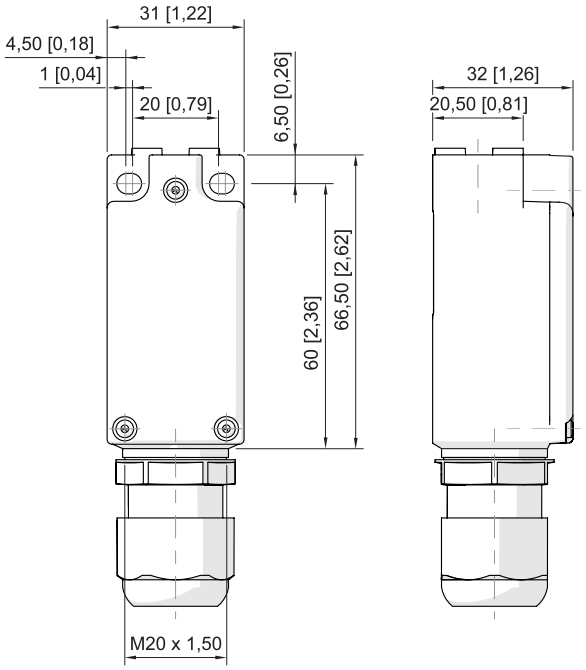

Switching Capacity

	Version 8060/2-1-.-.. and 8060/2-2-.-..
AC-12	max. 250 V max. 500 V for equal potential max. 4 A max. 5000 VA
AC-15	max. 250 V max. 500 V for equal potential max. 4 A max. 1000 VA
DC-12	max. 125 V max. 4 A max. 400 W

E4

Contact Element Version

Slow-action contact

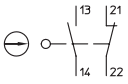

8060/2-1

Snap-action contact

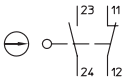

8060/2-2

Note: the positive opening operation function depends on the actuator used



- Operating temperature range: -60 °C to +60 °C
- Large inner connection chamber
- Plastic Ex e enclosure
- Degree of protection IP66/67
- Five different contact versions
- Different actuator versions, which can be displaced by 4 x 90°
- Also applicable as simple apparatus

WebCode **8070C**

Plastic Position switch; switch dimensions meet the requirements of DIN EN 50041. It is designed to detect the position of moving components. Certified versions fulfil the requirements for safety switches as set out in EN 13849-1 and have positive-opening contacts in accordance with EN 60947-5-1.

	IECEx / ATEX					
Zone	0	1	2	20	21	22
Installation in		•	•		•	•

Selection Table

Actuator		Adjustable rotary lever						
Figure	Contacts	Switching function	Positive opening contact	Product Type	Art. No.	Listprice €	PS	Weight kg
	1 NC + 1 NO	Slow-action contact	No	8070/2-1-DS-U60	275363▲	355.00	11	0.256
Actuator		**Parallel roller lever**						
Figure	Contacts	Switching function	Positive opening contact	Product Type	Art. No.	Listprice €	PS	Weight kg
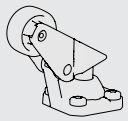	1 NC + 1 NO	Slow-action contact	Yes	8070/2-1-WPH-U60	258222	369.80	11	0.170
		Snap-action contact	Yes	8070/2-2-WPH-U60	258230	369.80	11	0.170
Actuator		**Plunger**						
Figure	Contacts	Switching function	Positive opening contact	Product Type	Art. No.	Listprice €	PS	Weight kg
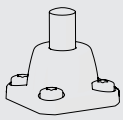	1 NC + 1 NO	Slow-action contact	Yes	8070/2-1-W-U60	258219▲	324.10	11	0.167
		Snap-action contact	Yes	8070/2-2-W-U60	258227▲	324.10	11	0.167

▲ Preferred products – in stock or available at short notice

Selection Table

Actuator		Rod lever						
Figure	Contacts	Switching function	Positive opening contact	Product Type	Art. No.	Listprice €	PS	Weight kg
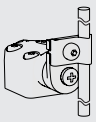	1 NC + 1 NO	Slow-action contact	No	8070/2-1-DD-U60	275068	355.00	11	0.242
Actuator		Roller lever						
Figure	Contacts	Switching function	Positive opening contact	Product Type	Art. No.	Listprice €	PS	Weight kg
	1 NC + 1 NO	Slow-action contact	Yes	8070/2-1-WH-U60	258221	336.80	11	0.168
		Snap-action contact	Yes	8070/2-2-WH-U60	258229▲	336.80	11	0.168
Actuator		Roller plunger						
Figure	Contacts	Switching function	Positive opening contact	Product Type	Art. No.	Listprice €	PS	Weight kg
	1 NC + 1 NO	Slow-action contact	Yes	8070/2-1-R-U60	258220	336.80	11	0.168
		Snap-action contact	Yes	8070/2-2-R-U60	258228	336.80	11	0.168
Actuator		Rotary lever						
Figure	Contacts	Switching function	Positive opening contact	Product Type	Art. No.	Listprice €	PS	Weight kg
	1 NC + 1 NO	Slow-action contact	Yes	8070/2-1-D-U60	275063▲	355.00	11	0.234
		Snap-action contact	Yes	8070/2-2-D-U60	275064▲	355.00	11	0.234
	2 NCs	Slow-action contact	Yes	8070/2-3-D-U60	275065▲	355.00	11	0.234
Actuator		Safety switch						
Figure	Contacts	Switching function	Positive opening contact	Product Type	Art. No.	Listprice €	PS	Weight kg
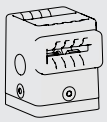	1 NC + 1 NO	Slow-action contact	Yes	8070/2-1-AZ-U60	258226▲	418.60	11	0.194
	2 NCs	Slow-action contact	Yes	8070/2-3-AZ-U60	258241	436.50	11	0.194
Actuator		Spring rod head						
Figure	Contacts	Switching function	Positive opening contact	Product Type	Art. No.	Listprice €	PS	Weight kg
	1 NC + 1 NO	Snap-action contact	No	8070/2-2-TK300-U60	275346	355.00	11	0.204
		Snap-action contact	No	8070/2-2-TK-U60	258234▲	357.00	11	0.204

The actuators enclosed are not mounted.
Actuators without positive opening are not suitable for safety circuits!

Safety switch, separate actuator made of metal (please order separately; see spare parts and accessories)

Technical Data

Variant	8070/2-1-..-... and 8070/2-2-..-... 1 NC + 1 NO	8070/2-3-..-... 2 NCs	8070/2-1-AZ-U50 1 NC + 1 NO	8070/2-3-AZ-U50 2 NCs
Explosion Protection				
IECEx gas explosion protection	Ex db eb IIC T6 Gb	Ex db eb IIC T6 Gb	Ex db eb IIC T6 Gb	Ex db eb IIC T6 Gb
IECEx dust explosion protection	Ex tb IIIC T80 °C Db	Ex tb IIIC T80 °C Db	Ex tb IIIC T80 °C Db	Ex tb IIIC T80 °C Db

Technical Data				
Variant	**8070/2-1-..-... and 8070/2-2-..-... 1 NC + 1 NO**	**8070/2-3-..-... 2 NCs**	**8070/2-1-AZ-U50 1 NC + 1 NO**	**8070/2-3-AZ-U50 2 NCs**
Explosion Protection				
ATEX gas explosion protection	Ⓔx II 2 G Ex db eb IIC T6 Gb	Ⓔx II 2 G Ex db eb IIC T6 Gb	Ⓔx II 2 G Ex db eb IIC T6 Gb	Ⓔx II 2 G Ex db eb IIC T6 Gb
ATEX dust explosion protection	Ⓔx II 2 D Ex tb IIIC T80 °C Db	Ⓔx II 2 D Ex tb IIIC T80 °C Db	Ⓔx II 2 D Ex tb IIIC T80 °C Db	Ⓔx II 2 D Ex tb IIIC T80 °C Db
EAC gas explosion protection	Ex 1 Ex db e IIC T6 Gb	Ex 1 Ex db e IIC T6 Gb	Ex 1 Ex db e IIC T6 Gb	Ex 1 Ex db e IIC T6 Gb
EAC dust explosion protection	Ex Ex tb IIIC T80 °C Db	Ex Ex tb IIIC T80 °C Db	Ex Ex tb IIIC T80 °C Db	Ex Ex tb IIIC T80 °C Db
Certificates	ATEX (BVS), Canada / USA (CSA), EAC (CCVE), IECEx (BVS), India (PESO), Korea (KGS)	ATEX (BVS), Canada / USA (CSA), EAC (CCVE), IECEx (BVS), India (PESO), Korea (KGS)	ATEX (BVS), Canada / USA (CSA), EAC (CCVE), IECEx (BVS), India (PESO)	ATEX (BVS), Canada / USA (CSA), EAC (CCVE), IECEx (BVS), India (PESO)
Notes	Product label may vary. Series devices have certification according to ATEX and IECEX.			
Electrical Data				
Rated operational voltage DC	125 V	125 V	125 V	125 V
Rated operational voltage AC (equal potential)	500 V	400 V	500 V	400 V
Rated operational voltage (unequal potential)	250 V	250 V	250 V	250 V
Rated insulation voltage	500 V	500 V	500 V	500 V
Rated operational current	2 A 4 A	2 A 4 A	2 A 4 A	2 A 4 A
Rated operational current note	(for simple apparatus: 200 mA): inductance L_i and capacitance C_i are negligible	(for simple apparatus: 200 mA): inductance L_i and capacitance C_i are negligible	(for simple apparatus: 200 mA): inductance L_i and capacitance C_i are negligible	(for simple apparatus: 200 mA): inductance L_i and capacitance C_i are negligible
Electrical service life	Max. 10^6 operating cycles	Max. 10^6 operating cycles	Max. 10^6 operating cycles	Max. 10^6 operating cycles
Mechanical service life	Max. 10^6 operating cycles	Max. 10^6 operating cycles	Max. 10^6 operating cycles	Max. 10^6 operating cycles
Rated surge voltage	6 kV	6 kV	6 kV	6 kV
Maximum operating frequency	1800 operating cycles/h	1800 operating cycles/h	1800 operating cycles/h	1800 operating cycles/h
Ambient Conditions				
Ambient temperature	-60 °C ... +55 °C (max. 4 A) -20 °C ... +60 °C (IP67 (EN 60529)) (Max. 2 A) -60 °C ... +60 °C (Max. 2 A)	-60 °C ... +55 °C (max. 4 A) -20 °C ... +60 °C (IP67 (EN 60529)) (Max. 2 A) -60 °C ... +60 °C (Max. 2 A)	-50 °C ... +55 °C (max. 4 A) -20 °C ... +60 °C (IP67 (EN 60529)) (Max. 2 A) -50 °C ... +60 °C (Max. 2 A)	-50 °C ... +55 °C (max. 4 A) -20 °C ... +60 °C (IP67 (EN 60529)) (Max. 2 A) -50 °C ... +60 °C (Max. 2 A)
Mechanical Data				
Degree of protection (IP)	IP66	IP66	IP66	IP66
Enclosure material	Thermoplast GF, impact resistant	Thermoplast GF, impact resistant	Thermoplast GF, impact resistant	Thermoplast GF, impact resistant
Cover material	Duroplast GF, impact resistant	Duroplast GF, impact resistant	Duroplast GF, impact resistant	Duroplast GF, impact resistant
Contact material	Silver-nickel	Silver-nickel	Silver-nickel	Silver-nickel
Connection cross-section finely stranded	0.75 – 1.5 mm²	0.75 – 1.5 mm²	0.75 – 1.5 mm²	0.75 – 1.5 mm²
Connection cross-section solid	0.75 – 1.5 mm²	0.75 – 1.5 mm²	0.75 – 1.5 mm²	0.75 – 1.5 mm²
Contact system	2-pole, galvanically separated with double break	2-pole, galvanically separated with double break	2-pole, galvanically separated with double break	2-pole, galvanically separated with double break
Contact opening	≥ 1.5 mm (isolating distance ≥ 3 mm)	≥ 1.5 mm (isolating distance ≥ 3 mm)	≥ 1.5 mm (isolating distance ≥ 3 mm)	≥ 1.5 mm (isolating distance ≥ 3 mm)
Seal	Silicone	Silicone	Silicone	Silicone
Components				
Cable entries	1 x M20 Ø 7 – 13 mm	1 x M20 Ø 7 – 13 mm	1 x M20 Ø 7 – 13 mm	1 x M20 Ø 7 – 13 mm
Material cable gland	Polyamide, Glass fibre reinforced	Polyamide, Glass fibre reinforced	Polyamide, Glass fibre reinforced	Polyamide, Glass fibre reinforced

Accessories

Figure	Description	Art. No.	Listprice €	PS	Weight kg
Actuator					
	Bent actuator	258608	37.60	Z1	0.100
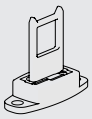	Movable actuator	258609	57.00	Z1	0.100
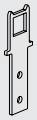	Straight actuator	258607	33.30	Z1	0.100
Cable glands					
	8161/7-M20-1307 7 ... 13 mm², 50 pieces (delivery lot[1])	239172▲	4.20	10	0.013

Spare Parts

Figure	Description	Art. No.	Listprice €	PS	Weight kg
Actuator					
	Rotary lever actuator	275368	66.30	E1	0.040
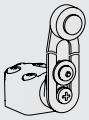	Adjustable rotary lever actuator	275370	113.00	E1	0.080
	Spring rod head actuator	258605	188.40	E1	0.100
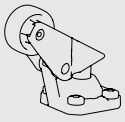	Parallel roller lever actuator	258604	90.20	E1	0.100
	Roller lever actuator	258603	89.80	E1	0.100
	Roller plunger actuator	258602	70.80	E1	0.100

E4

Spare Parts

Figure	Description	Art. No.	Listprice €	PS	Weight kg
Actuator					
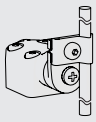	Rod lever actuator	275369	108.00	E1	0.655
Contact element					
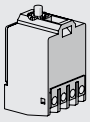	1 NC + 1 NO slow-action contact 8080/1-1	132529	35.00	E1	0.025
	1 NC + 1 NO slow-action contact 8080/1-2	279482	35.00	E1	0.025
	2 NC slow-action contact 8080/1-3	132532	35.00	E1	0.025

Purchase order quantity in [pieces], the delivery quantity is automatically rounded to the lot size.

Dimensional Drawings (All Dimensions in mm [inches]) – Subject to Alterations

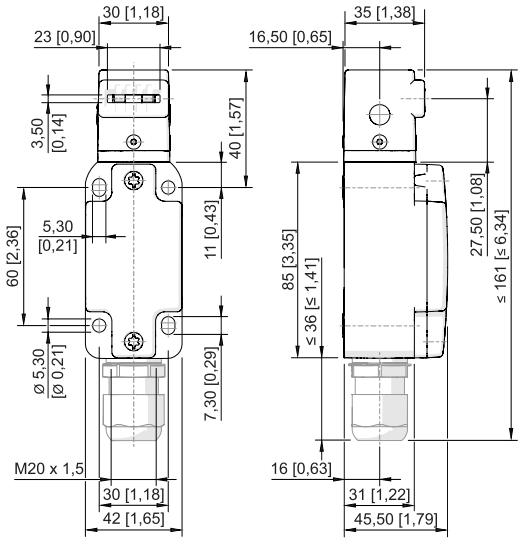

Safety switch 8070/2-.-AZ-U50

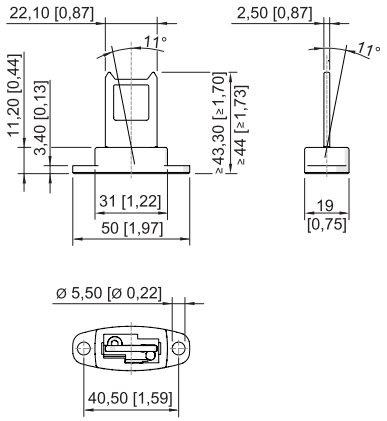

Adjustable actuator for safety switch

E4

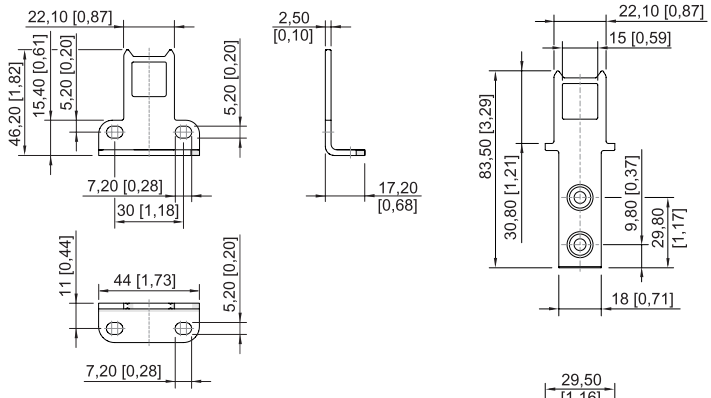

Angled actuator for safety switch

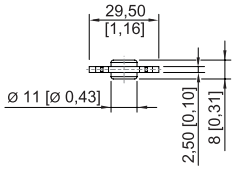

Straight actuator for safety switch

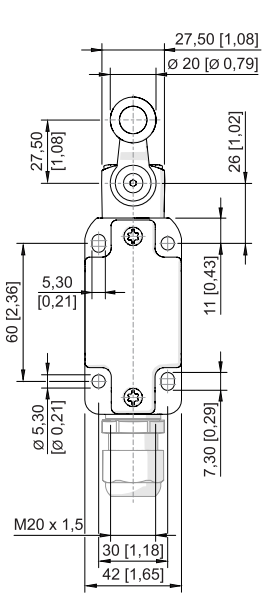

Swivelling lever 8070/2-.-D-U60

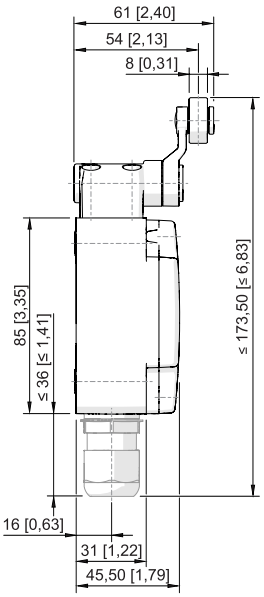

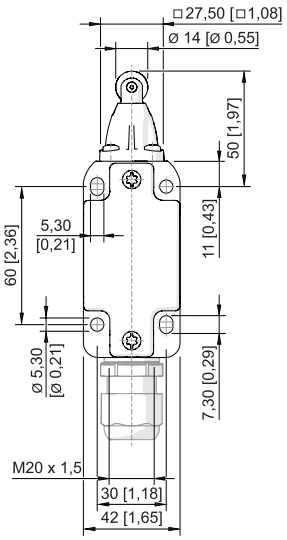

Roller plunger 8070/2-.-R-U60

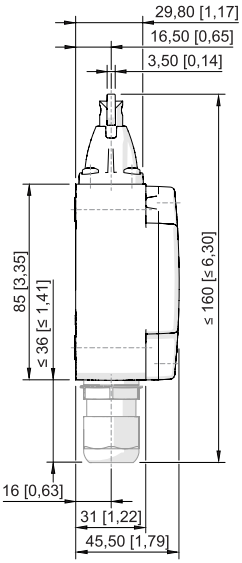

E4

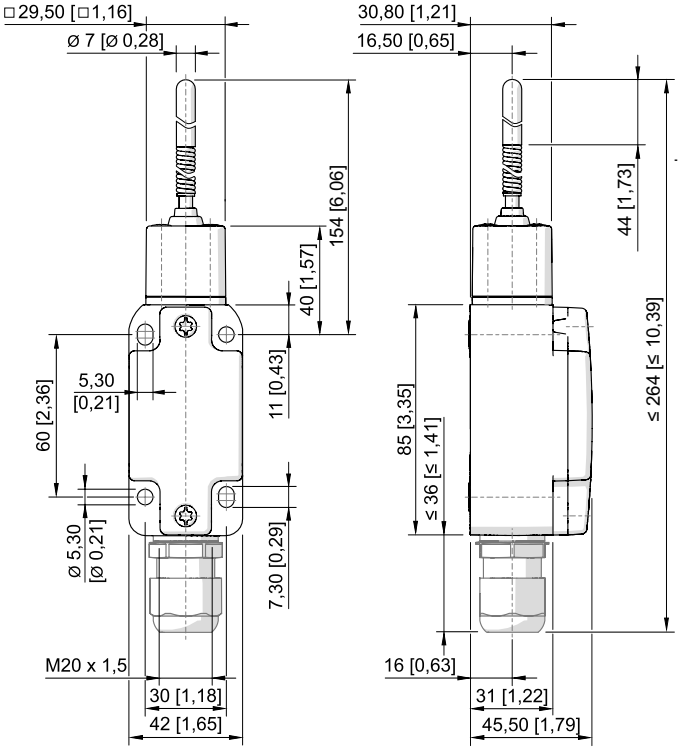

Roller plunger 8070/2-.-R-U60

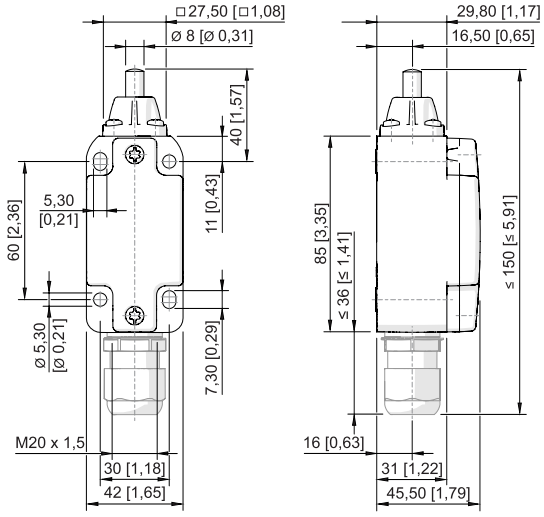

Domed plunger 8070/2-.-W-U60

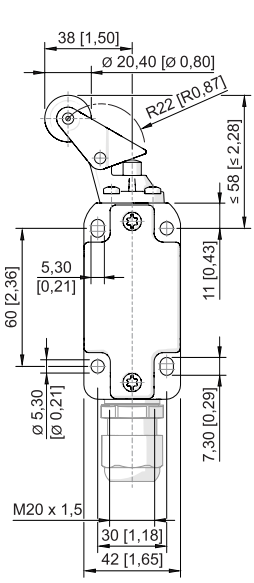

Roller lever 8070/2-.-WH-U60

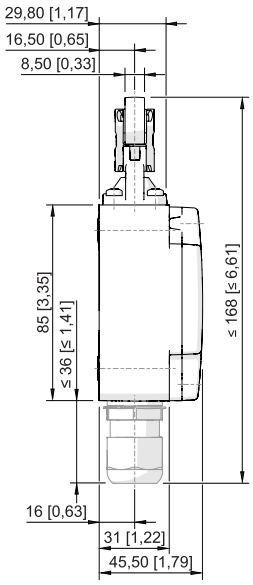

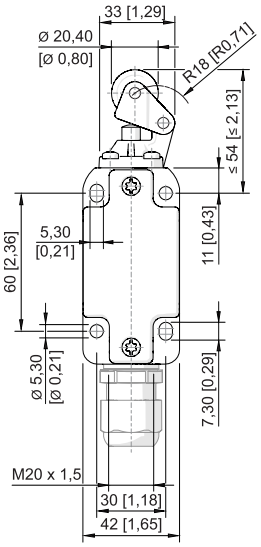

Roller lever 8070/2-.-WPH-U60

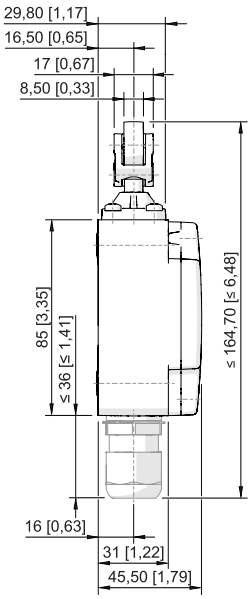

E4

Switching Capacity

	Version 8070/2-1-.-.. und 8070/2-2-.-..	Version 8070/2-3-.-..
AC-12	max. 250 V max. 500 V for equal potential max. 4 A max. 5000 VA	max. 250 V max. 400 V for equal potential max. 4 A max. 4000 VA
AC-15	max. 250 V max. 500 V for equal potential max. 4 A max. 1000 VA	max. 250 V max. 400 V for equal potential max. 4 A max. 1000 VA
DC-12	max. 125 V max. 4 A max. 400 W	max. 125 V max. 4 A max. 400 W

Contact Element Version

Slow-action contact

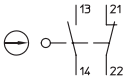

8060/2-1

Slow-action contact

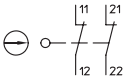

8060/2-3

Snap-action contact

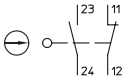

8060/2-2

Note: the positive opening operation function depends on the actuator used

E4



- Flexible configuration due to pushbutton, mushroom pushbutton, mushroom stay-put button, mushroom stay-put button with key lock, key-operated button, key-operated switch
- Easy assembly thanks to single-hole mounting (D 30)
- Codable "latching", "spring return", "key not removable“ functions
- Spring clamp terminals with connection chamber

WebCode 8003A

R. STAHL Series 8003 control buttons and/or switches for panel mounting switch load, control and signal circuits up to 6 A. Depending on the type, they are complete or incomplete explosion-protected equipment with corresponding requirements for installation. As an option, various actuators are available.

	IECEx / ATEX					
Zone	0	1	2	20	21	22
Installation in		•	•		•	•

	NEC 500 CEC Appendix J					
	Class I		Class II		Class III	
Division	1	2	1	2	1	2
Installation in		•		•		

	CEC Section 18					
	NEC® 505 Class I			NEC® 506		
Zone	0	1	2	20	21	22
Installation in		•	•			

Selection Table

Figure	Number of NCs	Number of NOs	Product Type	Art. No.	Listprice €	PS	Weight kg
Actuator: Key-operated switch actuator with key-operated switch actuator Number of switching positions: 2 Certificates: ATEX (PTB), Canada / USA (UL), China (CQST), EAC (ENDCE), IECEx (PTB), India (PESO), Korea (KGS)							
	–	2	8003/131-008-2-r-MS1	127244	200.00	11	0.220
Actuator: Key-operated switch actuator with key-operated switch actuator Number of switching positions: 2 Certificates: ATEX (PTB), Canada / USA (UL), EAC (ENDCE), IECEx (PTB), India (PESO), Korea (KGS)							
	1	1	8003/111-008-2-r-MS1	127240▲	200.00	11	0.230
Actuator: Mushroom pushbutton Certificates: ATEX (PTB), Canada / USA (UL), China (CQST), EAC (ENDCE), IECEx (PTB), India (PESO), Korea (KGS)							
	1	1	8003/111-003	127183	152.00	11	0.140

E4

Control Buttons / Switches for Panel Mounting

Series 8003 Spring Clamp Terminals with Connection Chamber

Selection Table

Actuator Certificates		Mushroom stay-put button EM-STOP ATEX (PTB), Canada / USA (UL), EAC (ENDCE), IECEx (PTB), India (PESO), Korea (KGS)					
Figure	Number of NCs	Number of NOs	Product Type	Art. No.	Listprice €	PS	Weight kg
	1	1	8003/111-010S	217915▲	181.70	11	0.125
	2	–	8003/121-010S	217916▲	174.30	11	0.125
Actuator Certificates		Mushroom stay-put button EM-STOP, 55 mm ATEX (PTB), Canada / USA (UL), EAC (ENDCE), IECEx (PTB), India (PESO), Korea (KGS)					
Figure	Number of NCs	Number of NOs	Product Type	Art. No.	Listprice €	PS	Weight kg
	1	1	8003/111-015S	217918▲	181.70	11	0.145
	2	–	8003/121-015S	217919	174.30	11	0.145
Actuator Certificates		Mushroom stay-put button with key-operated switch actuator EM-STOP ATEX (PTB), Canada / USA (UL), EAC (ENDCE), IECEx (PTB), India (PESO), Korea (KGS)					
Figure	Number of NCs	Number of NOs	Product Type	Art. No.	Listprice €	PS	Weight kg
	1	1	8003/111-009S-MS1	217911	231.50	11	0.140
Actuator Certificates		Pushbutton ATEX (PTB), Canada / USA (UL), China (CQST), EAC (ENDCE), IECEx (PTB), India (PESO), Korea (KGS)					
Figure	Number of NCs	Number of NOs	Product Type	Art. No.	Listprice €	PS	Weight kg
	–	2	8003/131-001	127125▲	119.00	11	0.140
Actuator Certificates		Pushbutton ATEX (PTB), Canada / USA (UL), EAC (ENDCE), IECEx (PTB), India (PESO), Korea (KGS)					
Figure	Number of NCs	Number of NOs	Product Type	Art. No.	Listprice €	PS	Weight kg
	1	1	8003/111-001	126993▲	119.00	11	0.140
Actuator Number of switching positions Certificates		Rotary actuator, small not padlockable 2 ATEX (PTB), Canada / USA (UL), EAC (ENDCE), IECEx (PTB), India (PESO), Korea (KGS)					
Figure	Number of NCs	Number of NOs	Product Type	Art. No.	Listprice €	PS	Weight kg
	–	2	8003/131-726-2-r	213534▲	112.70	11	0.125

- yellow label for EM-STOP function is enclosed
- plates must be ordered separately; see accessories
- key-operated switch with “spring-return” and/or “key not removable” on request
- versions with other locking cylinders on request
- key switches type 8003/1..-008-. and control switches type 8003/1..-726-3 are codable (“latching”, “spring-return”, “key removable”)

Technical Data

Variant	8003/1.1-...	8003/1.1-...S
Explosion Protection		
IECEx gas explosion protection	Ex db eb IIC T6 Gb	Ex db eb IIC T6 Gb

Technical Data

Variant	8003/1.1-...	8003/1.1-...S
Explosion Protection		
IECEx dust explosion protection	Ex tb IIIC T80 °C Db	Ex tb IIIC T80 °C Db
ATEX gas explosion protection	⟨Ex⟩ II 2 G Ex db eb IIC T6 Gb	⟨Ex⟩ II 2 G Ex db eb IIC T6 Gb
ATEX dust explosion protection	⟨Ex⟩ II 2 D Ex tb IIIC T80 °C Db	⟨Ex⟩ II 2 D Ex tb IIIC T80 °C Db
Notes	CCC certificate available from 2021 onward	CCC certificate available from 2021 onward
Notes	Product label may vary. Series devices have certification according to ATEX and IECEX.	
Electrical Data		
Rated operational voltage AC	500 V	500 V
Rated operational current	6 A	6 A
Ambient Conditions		
Ambient temperature	-20 °C ... +60 °C	-55 °C ... +60 °C
Mechanical Data		
Enclosure protection type (IP) front	IP66	IP66
Enclosure protection type (IP) rear	IP65	IP65
Contact material	Silver-nickel	Silver-nickel
Silicone-free	Yes	No
Conductor cross-section min.	0.75 mm²	0.75 mm²
Conductor cross-section max.	1.5 mm²	1.5 mm²
Components		
Cable entries	1 x M16 x 1.5	1 x M16 x 1.5
Entry type	Standard 8161, moulded material	Standard 8161, moulded material

Accessories

Figure	Description	Art. No.	Listprice €	PS	Weight kg
Spare key					
	Closing MS1	107109 ▲	18.50	Z1	0.008

E4

Spare Parts

Figure	Description	Art. No.	Listprice €	PS	Weight kg
Symbol label for pushbutton and selector switch					
	Colour: blue Blank label without text	155911 ▲	185.00	E1	0.001
	Colour: yellow Blank label without text	155914 ▲	185.00	E1	0.001
	Colour: red Blank label without text	155897 ▲	185.00	E1	0.001

Spare Parts

Figure	Description	Art. No.	Listprice €	PS	Weight kg
Symbol label for pushbutton and selector switch					
	Colour: green Blank label without text	155901 ▲	185.00	E1	0.001
	Colour: white Blank label without text	155908 ▲	185.00	E1	0.001
	Colour: black Blank label without text	155905 ▲	185.00	E1	0.001
	Colour: green Text: I	155689 ▲	185.00	E1	0.001
	Colour: green Text: II	155706	185.00	E1	0.001
	Colour: red Text: O	155596 ▲	185.00	E1	0.001
	Colour: red Text: OFF	155654	185.00	E1	0.001
	Colour: red Text: STOP	155615 ▲	185.00	E1	0.001
	Colour: green Text: ON	155671	185.00	E1	0.001
Label mount					
	Label mount, size 1, without symbol label Text: 1 line for actuators to fit Ø 30.5 mm holes	155632	177.20	E1	0.001
Closure part					
	for closing of unused mounting holes Ø 30.5 mm	155329	14.90	E1	0.016

E4

Dimensional Drawings (All Dimensions in mm [inches]) – Subject to Alterations

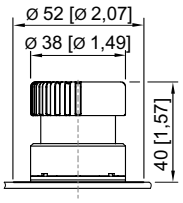

Mushroom stay-put button Ø 38 mm

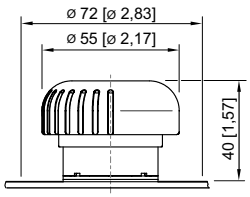

Mushroom stay-put button Ø 55 mm

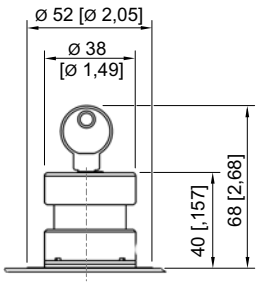

Key-stay button

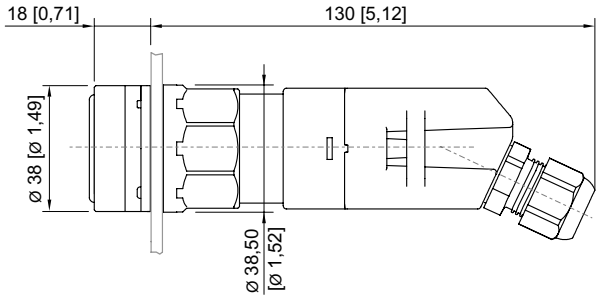

Pushbutton with connection area

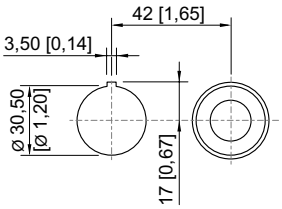

Drilling pattern: for aligning several devices Ø 38 mm, in a panel

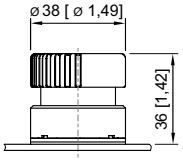

Mushroom button

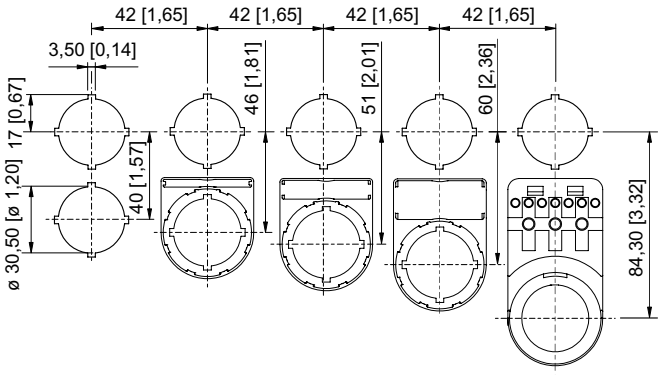

Standard cut-out with / without front label

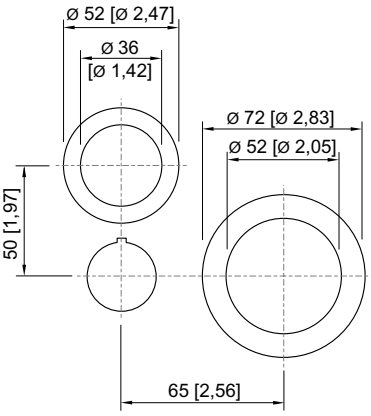

Standard cut-out for EMERGENCY-STOP button

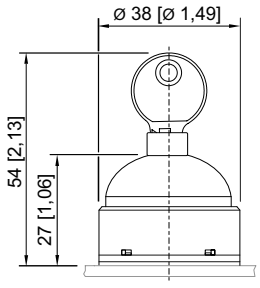

Key switch

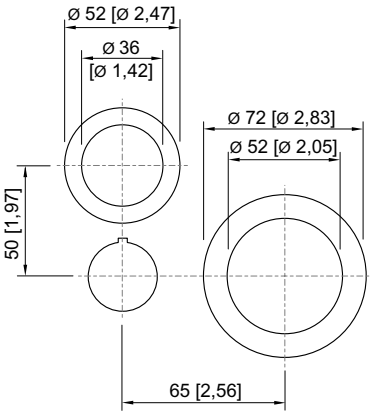

Control switch, not padlockable

E4

Control Buttons / Switches for Panel Mounting

Series 8003 Plug-in Connection with Connection Line and Connection Chamber



- Flexible configuration due to pushbutton, mushroom pushbutton, mushroom stay-put button, mushroom stay-put button with key lock, key-operated button, key-operated switch
- Easy assembly thanks to single-hole mounting (D 30)
- Codable "latching", "spring return", "key not removable" functions
- Plug-in connection with 6 m connection line

WebCode 8003D

R. STAHL Series 8003 control buttons and/or switches for panel mounting switch load, control and signal circuits up to 6 A. Depending on the type, they are complete or incomplete explosion-protected equipment with corresponding requirements for installation. As an option, various actuators are available.

	IECEx / ATEX					
Zone	0	1	2	20	21	22
Installation in		•	•		•	•

	NEC 500 / CEC Appendix J					
	Class I		Class II		Class III	
Division	1	2	1	2	1	2
Installation in		•		•		

	CEC Section 18					
	NEC® 505 Class I			NEC® 506		
Zone	0	1	2	20	21	22
Installation in		•	•			

Selection Table

Actuator: Key-operated switch actuator with key-operated switch actuator
Number of switching positions: 2

Figure	Number of NCs	Number of NOs	Product Type	Art. No.	Listprice €	PS	Weight kg
	1	1	8003/113-008-2-r-MS1-6	218604	235.90	11	0.125

Actuator: Key-operated switch actuator with key-operated switch actuator
Number of switching positions: 3

Figure	Number of NCs	Number of NOs	Product Type	Art. No.	Listprice €	PS	Weight kg
	–	2	8003/133-008-3-rr-MS1-6	213542	223.70	11	0.125

Actuator: Mushroom stay-put button EM-STOP

Figure	Number of NCs	Number of NOs	Product Type	Art. No.	Listprice €	PS	Weight kg
	1	1	8003/113-010S-6	217964	201.60	11	0.125
	2	–	8003/123-010S-6	217965	201.60	11	0.125

E4

Selection Table

Actuator		Pushbutton					
Figure	Number of NCs	Number of NOs	Product Type	Art. No.	Listprice €	PS	Weight kg
	1	1	8003/113-001-6	213516	147.30	11	0.125
	–	2	8003/133-001-6	213540	147.30	11	0.125
Actuator Number of switching positions		Rotary actuator, small not padlockable 2					
Figure	Number of NCs	Number of NOs	Product Type	Art. No.	Listprice €	PS	Weight kg
	1	1	8003/113-726-2-r-6	213524	136.30	11	0.125
Actuator Number of switching positions		Rotary actuator, small not padlockable 3					
Figure	Number of NCs	Number of NOs	Product Type	Art. No.	Listprice €	PS	Weight kg
	1	1	8003/143-726-3-tt-6	213556	136.30	11	0.125
	–	2	8003/133-726-3-tt-6	213546	136.30	11	0.125

- yellow label for EM-STOP function is enclosed
- plates must be ordered separately; see accessories
- key-operated switch with “spring-return” and/or “key not removable” on request
- versions with other locking cylinders on request
- key switches type 8003/1..-008-. and control switches type 8003/1..-726-3 are codable (“latching”, “spring-return”, “key removable”)

Technical Data

Explosion Protection	
IECEx gas explosion protection	Ex db eb IIC T6 Gb
IECEx dust explosion protection	Ex tb IIIC T80 °C Db
ATEX gas explosion protection	Ⓔx II 2 G Ex db eb IIC T6 Gb
ATEX dust explosion protection	Ⓔx II 2 D Ex tb IIIC T80 °C Db
Notes	CCC certificate available from 2021 onward
Notes	Product label may vary. Series devices have certification according to ATEX and IECEX.
Electrical Data	
Rated operational voltage AC	500 V
Rated operational current	6 A
Ambient Conditions	
Ambient temperature	-20 °C ... +60 °C
Mechanical Data	
Enclosure protection type (IP) front	IP66
Enclosure protection type (IP) rear	IP65
Contact material	Silver-nickel
Silicone-free	Yes
Conductor length	6 m
Type of connection cable	ÖLFLEX 4x1 mm²
Components	
Cable entries	1 x M16 x 1.5
Entry type	Standard 8161, moulded material

Control Buttons / Switches for Panel Mounting

Series 8003 Plug-in Connection with Connection Line and Connection Chamber

Accessories

Figure	Description	Art. No.	Listprice €	PS	Weight kg
Spare key					
	Closing MS1	107109▲	18.50	Z1	0.008

Spare Parts

Figure	Description	Art. No.	Listprice €	PS	Weight kg
Symbol label for pushbutton and selector switch					
	Colour: blue Blank label without text	155911▲	185.00	E1	0.001
	Colour: yellow Blank label without text	155914▲	185.00	E1	0.001
	Colour: red Blank label without text	155897▲	185.00	E1	0.001
	Colour: green Blank label without text	155901▲	185.00	E1	0.001
	Colour: white Blank label without text	155908▲	185.00	E1	0.001
	Colour: black Blank label without text	155905▲	185.00	E1	0.001
	Colour: green Text: I	155689▲	185.00	E1	0.001
	Colour: green Text: II	155706	185.00	E1	0.001
	Colour: red Text: O	155596▲	185.00	E1	0.001

E4

Spare Parts

Figure	Description	Art. No.	Listprice €	PS	Weight kg
Symbol label for pushbutton and selector switch					
	Colour: red Text: OFF	155654	185.00	E1	0.001
	Colour: red Text: STOP	155615▲	185.00	E1	0.001
	Colour: green Text: ON	155671	185.00	E1	0.001
Label mount					
	Label mount, size 1, without symbol label Text: 1 line for actuators to fit Ø 30.5 mm holes	155632	177.20	E1	0.001
Closure part					
	for closing of unused mounting holes Ø 30.5 mm	155329	14.90	E1	0.016

Dimensional Drawings (All Dimensions in mm [inches]) – Subject to Alterations

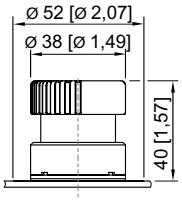

Mushroom stay-put button Ø 38 mm

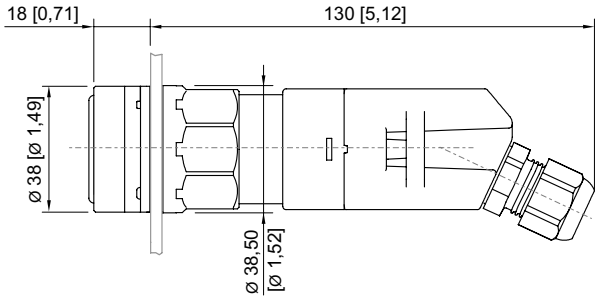

Pushbutton with connection area

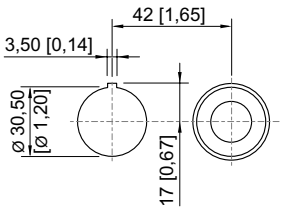

Drilling pattern: for aligning several devices Ø 38 mm, in a panel

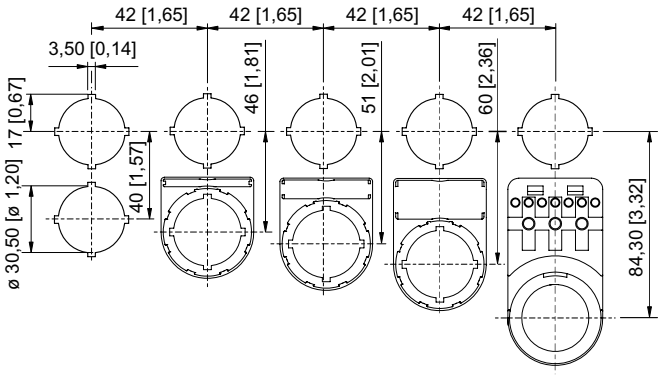

Standard cut-out with / without front label

E4

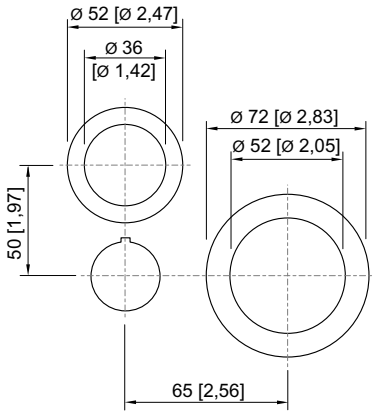

Standard cut-out for EMERGENCY-STOP button



- Advantageous LED technology: Extremely long service life, high luminance, low heat build-up
- For installation in enclosure walls, device covers, panels, control cabinets
- Version with spring clamp terminal with or without connection enclosure or version with prefabricated connection line and connection enclosure available

WebCode 8013A

R. STAHL Series 8013 LED indicating lamps show command statuses via a light signal, the colour of which you can determine using the colour filter included in the delivery: Red, yellow, green, blue or white. The long-life LEDs provide high luminance and low heat build-up. Versions with spring clamp terminal with or without connection enclosure and versions with prefabricated connection line and connection enclosure are available.

	IECEx / ATEX					
Zone	0	1	2	20	21	22
Installation in		•	•		•	•

	NEC 500 CEC Appendix J					
	Class I		Class II		Class III	
Division	1	2	1	2	1	2
Installation in		•				

	CEC Section 18					
	NEC® 505 Class I			NEC® 506		
Zone	0	1	2	20	21	22
Installation in		•	•			

Selection Table

Product variant Certificates		Ex d e ATEX (PTB), Canada / USA (UL), EAC (ENDCE), IECEx (PTB), India (PESO)					
Connection	Conductor cross-section	Conductor length	Product Type	Art. No.	Listprice €	PS	Weight kg
Connection cable plug connection	0.75 mm²	3 m	8013/313-al-3	216425	275.80	11	0.635
		6 m	8013/313-al-6	214311▲	283.60	11	0.625
Spring terminal connection	0.75 – 1.5 mm²	–	8013/311-al	129095▲	191.00	11	0.130
Product variant Certificates		Ex i ATEX (PTB), Canada / USA (UL), EAC (ENDCE), IECEx (PTB), India (PESO)					
Connection	Conductor cross-section	Conductor length	Product Type	Art. No.	Listprice €	PS	Weight kg
Connection cable plug connection	0.75 mm²	6 m	8013/323-al-6	214312	245.90	11	0.635
Spring terminal connection	0.75 – 1.5 mm²	–	8013/321-al	129110▲	191.00	11	0.140

The calotte insert caps red, yellow, green, blue, white are enclosed in the delivery.

Technical Data

Variant	Ex d e	Ex i
Explosion Protection		
IECEx gas explosion protection	Ex db eb mb IIC Gb	Ex db mb ia IIC Gb
IECEx dust explosion protection	Ex tb IIIC T80 °C Db	Ex tb IIIC T80 °C Db
ATEX gas explosion protection	Ⓔx II 2 G Ex db eb mb IIC Gb	Ⓔx II 2 G Ex db mb ia IIC Gb
ATEX dust explosion protection	Ⓔx II 2 D Ex tb IIIC T80 °C Db	Ⓔx II 2 D Ex tb IIIC T80 °C Db

LED Indicating Lamps for Panel Mounting

Series 8013 with Connection Chamber

Technical Data

Variant	Ex d e	Ex i
Explosion Protection		
EAC gas explosion protection	2 Ex d e m IIC T6 X 1 Ex ia IIC T6 X	2 Ex d e m IIC T6 X 1 Ex ia IIC T6 X
EAC dust explosion protection	Ex tD A21 IP65 T80 °C	Ex tD A21 IP65 T80 °C
Notes	Product label may vary. Series devices have certification according to ATEX and IECEX.	
Electrical Data		
Rated operational voltage AC	12 – 254 V	10.8 – 28 V
Rated operational voltage DC	12 – 254 V	10.8 – 28 V
Ambient Conditions		
Ambient temperature	-30°C ... +60°C	-30°C ... +60°C
Lighting Data		
Luminous colour	Blue Green Red White Yellow	Blue Green Red White Yellow
Mechanical Data		
Degree of protection note	acc. to IEC/ EN 60529	acc. to IEC/ EN 60529
Silicone-free	Yes	Yes
Cable entry	M16 x 1,5 (Ø2 ... 9 mm)	M16 x 1,5 (Ø2 ... 9 mm)
Components		
Entry type	Standard 8161, moulded material	Standard 8161, moulded material

Spare Parts

Figure	Description	Art. No.	Listprice €	PS	Weight kg
Label mount					
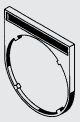	Label mount, size 1, without symbol label Text: 1 line for actuators to fit Ø 30.5 mm holes	155632	177.20	E1	0.001
Closure part					
	for closing of unused mounting holes Ø 30.5 mm	155329	14.90	E1	0.016

E4

Dimensional Drawings (All Dimensions in mm [inches]) – Subject to Alterations

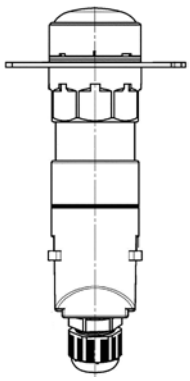

8013/3.1, 8013/3.3 Indicating lamp with terminal compartment

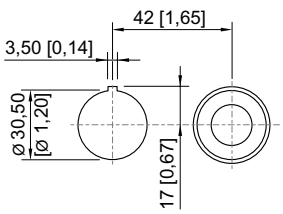

Drilling pattern: for aligning several devices Ø 38 mm, in a panel



- For installation in enclosure walls, device covers, panels or control cabinets
- Single-hole mounting Ø 30 mm
- Advantageous LED technology: Extremely long service life, high luminance, low heat build-up
- Reliabe explosion protection due to pressure-resistant encapsulated contact and lighting elements

WebCode 8018A

R. STAHL Series 8018 LED illuminated pushbuttons switch load, control and signal circuits and show command statuses via a light signal, the colour of which you can determine using the colour filter included in the delivery: Red, yellow, green, blue or white. The long-life LEDs provide high luminance and low heat build-up. The switches are supplied with a connection line.

	IECEx / ATEX					
Zone	0	1	2	20	21	22
Installation in		•	•		•	•

	NEC 500 CEC Appendix J					
	Class I		Class II		Class III	
Division	1	2	1	2	1	2
Installation in		•				

	CEC Section 18					
	NEC® 505 Class I			NEC® 506		
Zone	0	1	2	20	21	22
Installation in			•			

Selection Table

Product variant Certificates		LED illuminated pushbutton Ex e ATEX (PTB), Canada (UL), EAC (LPE), IECEx (PTB), USA (UL)					
Contact material	Number of NCs	Number of NOs	Product Type	Art. No.	Listprice €	PS	Weight kg
Silver-nickel	1	1	8018/3113-al-6	129769▲	326.00	11	0.740
	2	–	8018/3123-al-6	129777	326.00	11	0.740
	–	2	8018/3133-al-6	129784	326.00	11	0.740
Product variant Certificates		LED illuminated pushbutton Ex i ATEX (PTB), Canada / USA (UL), Canada (UL), EAC (LPE), IECEx (PTB)					
Contact material	Number of NCs	Number of NOs	Product Type	Art. No.	Listprice €	PS	Weight kg
Silver-nickel, gold-plated	1	1	8018/3213-al-6	210174	364.50	11	0.740
	2	–	8018/3223-al-6	210175	364.50	11	0.740
	–	2	8018/3233-al-6	210176	364.50	11	0.740

The colour filters red, yellow, green, blue, white are enclosed in the delivery.

Technical Data

Variant	LED illuminated pushbutton Ex e	LED illuminated pushbutton Ex i
Explosion Protection		
IECEx gas explosion protection	Ex db mb IIC T6 Gb	Ex db mb ia IIC T6 Gb
IECEx dust explosion protection	Ex tb IIIC T80 °C Db	Ex tb IIIC T80 °C Db
ATEX gas explosion protection	II 2 G Ex db mb IIC T6 Gb	II 2 G Ex db mb ia IIC T6 Gb
ATEX dust explosion protection	II 2 D Ex tb IIIC T80 °C Db	II 2 D Ex tb IIIC T80 °C Db

LED Illuminated Pushbutton

Series 8018 for Panel Mounting

Technical Data

Variant	LED illuminated pushbutton Ex e	LED illuminated pushbutton Ex i
Explosion Protection		
EAC gas explosion protection	1 Ex d mb IIC T6 Gb X 1 Ex d mb ia IIC T6 Gb X	1 Ex d mb IIC T6 Gb X 1 Ex d mb ia IIC T6 Gb X
EAC dust explosion protection	Ex tb IIIC T80 °C Db X	Ex tb IIIC T80 °C Db X
Notes	Product label may vary. Series devices have certification according to ATEX and IECEX.	
Electrical Data		
Rated operational voltage indicating lamp part	12(-10%) ... 254(+6%) V AC/DC	Ui = 10.8 ... 28 V DC
Rated operational current indicating lamp part	0.014 A at 24 V DC	I_i = 150 mA
Frequency	0 ... 60 Hz	
Rated operational current	6 A	100 mA
Ambient Conditions		
Ambient temperature	-30 °C ... +60 °C	-30 °C ... +60 °C
Lighting Data		
Lamp	White LED	White LED
Luminous colour	White Blue Green Yellow Red	White Blue Green Yellow Red
Mechanical Data		
Enclosure protection type (IP) front	IP66	IP66
Enclosure protection type (IP) rear	IP65	IP65
Degree of protection note	acc. to IEC/EN 60529	acc. to IEC/EN 60529
Enclosure material	Polyamide	Polyamide
Silicone-free	Yes	Yes
Conductor length	6 m	6 m
Mounting / Installation		
Connection	H05 6 x 0.75 mm² conductor	H05 6 x 0.75 mm² conductor

E4

Spare Parts

Figure	Description	Art. No.	Listprice €	PS	Weight kg
Closure part					
	for closing of unused mounting holes Ø 30.5 mm	155329	14.90	E1	0.016

Dimensional Drawings (All Dimensions in mm [inches]) – Subject to Alterations

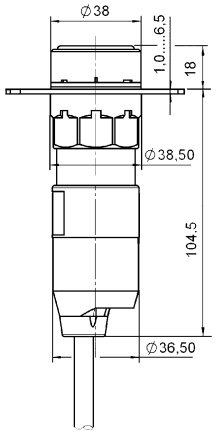

LED illuminated pushbutton

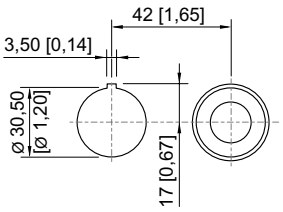

Drilling pattern: for aligning several devices Ø 38 mm, in a panel

E4



- Flexible: Modular structure and 3 sizes enable customer-specific versions
- Lightweight enclosure made from glass fibre reinforced polyester resin (GRP), suitable for shipping industry and offshore
- Versions with contact elements 8082 and 8208, usable up to SIL 2 and/or SIL 3

WebCode **8040B**

With the R. STAHL Series 8040 control device system, you can get a clear overview of the control devices. The 3 combinable design sizes and the modular structure offer flexibility. You can choose from one standard version and customised variants. The 8208 contact elements monitor the systems for wire breakage and short circuit.

	IECEx / ATEX					
Zone	0	1	2	20	21	22
Installation in		•	•		•	•

Selection Table

Product variant			2 pushbuttons								
Figure	Installation position top	Built-in element top	Installation position middle	Built-in element middle	Installation position bottom	Built-in element bottom	Product Type	Art. No.	Listprice €	PS	Weight kg
	Pushbutton Green - "I"	Contact element NC / NO	–	–	Pushbutton Red - "0"	Contact element NC / NO	8040/1280X-01L13SA05-01L08SA05	130692 ▲	214.00	11	0.460
Product variant			**Key-operated switch**								
Figure	Installation position top	Built-in element top	Installation position middle	Built-in element middle	Installation position bottom	Built-in element bottom	Product Type	Art. No.	Listprice €	PS	Weight kg
	–	–	Key-operated switch Latch-ing/latching	Contact element NC / NO	–	–	8040/1180X-08M01SA05	130902 ▲	244.00	11	0.450
Product variant			**LED illuminated pushbutton**								
Figure	Installation position top	Built-in element top	Installation position middle	Built-in element middle	Installation position bottom	Built-in element bottom	Product Type	Art. No.	Listprice €	PS	Weight kg
	–	–	LED illuminat-ed pushbutton All colours	Contact element NO / LED / NC	–	–	8040/1180X-35C06SA45	130828 ▲	232.00	11	0.400

Selection Table

Product variant			LED indicating lamp							
Figure	Installation position top	Built-in element top	Installation position middle	Built-in element middle	Installation position bottom	Built-in element bottom	Product Type	Art. No.	Listprice €	PS	Weight kg
	–	–	Indicator lamp bezel All colours	LED indicator lamp	–	–	8040/1180X-54C06SXXX	130890▲	187.00	11	0.350
Product variant			LED indicating lamp and 2 pushbuttons							
Figure	Installation position top	Built-in element top	Installation position middle	Built-in element middle	Installation position bottom	Built-in element bottom	Product Type	Art. No.	Listprice €	PS	Weight kg
	Indicator lamp bezel All colours	LED indicator lamp	Pushbutton Green - "I"	Contact element NC / NO	Pushbutton Red - "0"	Contact element NC / NO	8040/1380X-54C06SA70-01L13SA05-01L08SA05	130900▲	329.00	11	0.640
Product variant			LED indicating lamp and twin pushbutton							
Figure	Installation position top	Built-in element top	Installation position middle	Built-in element middle	Installation position bottom	Built-in element bottom	Product Type	Art. No.	Listprice €	PS	Weight kg
	Indicator lamp bezel All colours	LED indicator lamp	–	–	Twin pushbut-ton Red "0", green "I"	Contact element NC / NO	8040/1280X-54C06SXXX-23D01SA05	130898▲	258.00	11	0.540
Product variant			Mushroom pushbutton							
Figure	Installation position top	Built-in element top	Installation position middle	Built-in element middle	Installation position bottom	Built-in element bottom	Product Type	Art. No.	Listprice €	PS	Weight kg
	–	–	Mushroom pushbutton Black - "I"	Contact element NC / NO	–	–	8040/1180X-03L24SA05	130813▲	185.00	11	0.400
Product variant			Mushroom stay-put button							
Figure	Installation position top	Built-in element top	Installation position middle	Built-in element middle	Installation position bottom	Built-in element bottom	Product Type	Art. No.	Listprice €	PS	Weight kg
	–	–	EM-STOP mushroom stay-put but. Red - (rotating arrow)	Contact element NC / NO	–	–	8040/1180X-10L07SA05	130679▲	185.00	11	0.400
		–	EM-STOP mushroom stay-put but. Red - (rotating arrow)	Contact element NC / NO / NC	–	–	8040/1180X-10L07SA08	130819▲	203.00	11	0.410
	–	–	EM-STOP mush. stay-put but. 55 Red - (rotating arrow)	Contact element NC / NO	–	–	8040/1180X-15L07SA05	130816▲	187.00	11	0.400
Product variant			Mushroom stay-put button with key lock							
Figure	Installation position top	Built-in element top	Installation position middle	Built-in element middle	Installation position bottom	Built-in element bottom	Product Type	Art. No.	Listprice €	PS	Weight kg
	–	–	EM-STOP mushroom stay-put button with key lock	Contact element NC / NO	–	–	8040/1180X-09XXXSA05	130665▲	244.00	11	0.450

E4

▲ Preferred products – in stock or available at short notice

Selection Table

Figure	Installation position top	Built-in element top	Installation position middle	Built-in element middle	Installation position bottom	Built-in element bottom	Product Type	Art. No.	Listprice €	PS	Weight kg
Product variant			**Pushbutton**								
	–	–	Pushbutton Red "0", green "I"	Contact element NC / NO	–	–	8040/1180X-01L50SA05	130686▲	157.00	11	0.370
Product variant			**Selector switch with contact element 8082**								
	–	–	Small handle Latching/ latching	Contact element NC / NO	–	–	8040/1180X-26M01SA05	130834▲	185.00	11	0.420
Product variant			**Twin pushbutton**								
	–	–	Twin pushbutton Red "0", green "I"	Contact element NC / NO	–	–	8040/1180X-23D01SA05	130825	174.00	11	0.400

Technical Data

Explosion Protection	
IECEx gas explosion protection	Ex db eb IIC T6/T5 Gb
IECEx dust explosion protection	Ex tb IIIC T80 °C ... T95 °C Db
ATEX gas explosion protection	Ⓔx II 2 G Ex db eb IIC T6/T5 Gb
ATEX dust explosion protection	Ⓔx II 2 D Ex tb IIIC T80 °C ... T95 °C Db
EAC gas explosion protection	1 Ex d e IIC T6 Gb X
EAC dust explosion protection	Ex tb IIIC T80 °C Db X
Certificates	ATEX (PTB), Brazil (ULB), China (NEPSI), EAC (LPE), IECEx (PTB), India (PESO), Korea (KGS), Taiwan (ITRI)
Notes	CCC certificate available from 2021 onward
Notes	Product label may vary. Series devices have certification according to ATEX and IECEX.
Electrical Data	
Rated operational voltage AC	500 V
Rated operational current	10 A (T6)
Ambient Conditions	
Ambient temperature	-60 °C ... +40 °C (T6) -60 °C ... +55 °C (T5)
Mechanical Data	
Degree of protection (IP)	IP66
Degree of protection note	acc. to IEC/EN 60529
Enclosure material	Polyester resin, Glass fibre reinforced
Seal	Silicone, foamed
Silicone-free	No
Cover fixing type	With captive screws, M4 stainless steel screws
Notes	Actuator and cable gland standard with silicone. Silicone-free on request only.
Components	
Flange and plates	Without flange, without plates
Cable entries	1 x M25 Ø 7 to 17 mm

Technical Data

Components	
Entry type	Standard 8161, moulded material

Accessories

Figure	Description	Art. No.	Listprice €	PS	Weight kg
Spare key					
	Closing MS1	107109▲	18.50	Z1	0.008

Spare Parts

Figure	Description	Art. No.	Listprice €	PS	Weight kg
Caps for BG 054					
	for indicator lamp, all colours packaged	248685	9.20	E1	0.003
Colour filter for BG 735					
	for illuminated pushbutton, all colours packaged	248684	6.70	E1	0.001
Locking devices					
	8602C3-752 for actuated mushroom stay-put button BG010, BG012	244869	30.60	E1	0.090
	8602C3-753 for not actuated pushbutton BG001	244870	30.60	E1	0.090
	8602C3-754 for actuated pushbutton BG001	244871	30.60	E1	0.090
Protective collar					
	8602C3-751 plastic/yellow for mushroom stay-put button with key lock/mushroom stay-put button Ø 39 BG006, BG009, BG010, BG012	257708	23.10	E1	0.020
Special key					
	for tightening plastic locking nut	169101	11.30	E1	0.030
Label holder					
	Size 2, without insert disc, 1- or 2-line label for actuators Ø 39	223567	3.90	E1	0.002

E4

▲ Preferred products – in stock or available at short notice

Spare Parts

Figure	Description	Art. No.	Listprice €	PS	Weight kg
Label holder					
	Size 3, without insert disc, 1-, 2- or 3-line label for actuators Ø 39	223568	4.30	E1	0.002

Dimensional Drawings (All Dimensions in mm [inches]) – Subject to Alterations

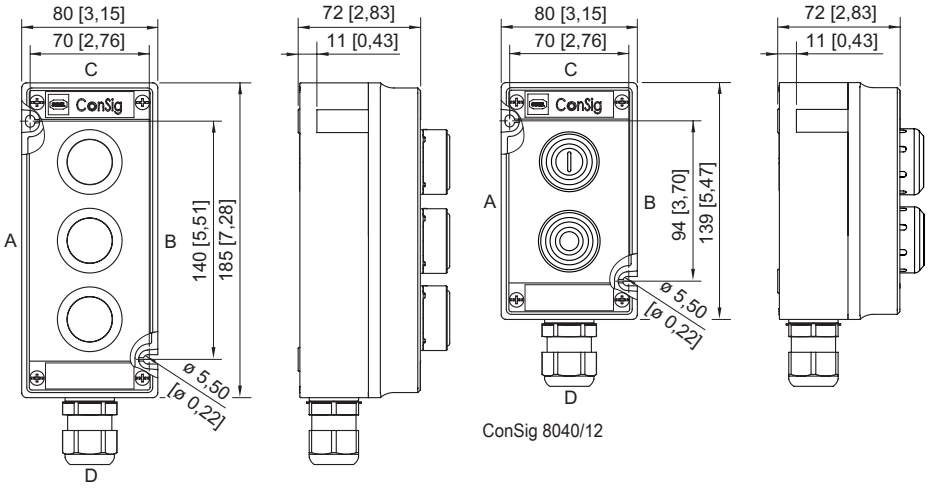

ConSig 8040/13

ConSig 8040/12

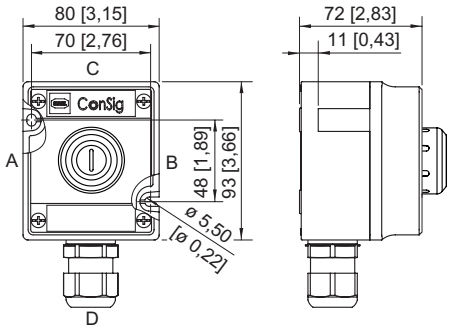

ConSig 8040/11

E4

Technical Data – Components for Control Devices Series 8040

Version	Series 8008 Control switch		
	Rated operational voltage AC	690.00 V	
	Rated operational voltage DC	230.00 V	
	Utilisation category	AC-1	16 A 690 V
		AC-3	16 A 690 V (load disconnect switch 8008/2-6)
		AC-15	16 A 415 V
		DC-1	10 A 220 V (3 conducting paths in series)
	Service temperature	T6 at 16 A: -60 ... +60 °C	

Version	Series 8082 Contact element for rail mounting		
	Rated operational voltage	max. 500 V	
	Ambient temperature	-60 °C ... +70 °C (T6) -60 °C ... +55 °C (T4)	
	Rated operating characteristics according to utilisation category	AC-12	10 A 250 V 7.5 A 400 V 5 A 550 V
		AC-15	10 A 110 V 6 A 250 V 4 A 400 V
		DC-13	6 A 60 V
		DC-13	2.5 A* 110 V 1 A* 230 V
		* (two contact elements in series)	

Version	Series 8082 Contact element for front installation		
	Rated operational voltage	max. 500 V	
	Ambient temperature	-60 °C ... +85 °C (T6) -60 °C ... +55 °C (T4)	
	Rated operating characteristics according to utilisation category	AC-12	10 A 250 V 7.5 A 400 V 5 A 550 V
		AC-15	10 A 110 V 6 A 250 V 4 A 400 V
		DC-13	1 A 110 V
		DC-13	6 A * 60 V 2.5 A* 110 V 1.25 A* 250 V
		* (two contact elements in series)	

Version	Series 8405 Ammeter	
	Rated operational voltage	max. 500 V
	Ambient temperature	-40 °C ... +70 °C
	Accuracy	Class 2.5

E4

Version	Series 8010 Indicating lamp	
	Rated operational voltage	Ex e: 12 ... 240 V, AC / DC (± 10 %) Ex i: 10.8 ... 30 V DC
	Rated operational current I_e	Ex i: max. 15 mA
	Rated operational power	max. 1 W
	Frequency range	0 ... 60 Hz



- High frequency motion sensor
- Intelligent sensor technology
- Adjustable switching time
- Operating point adjustable for dawn/dusk

WebCode **8265E**

The motion sensor is equipped with intelligent sensor technology that provides additional security. With a range of 1–8 m, a switching load of 1000 W and an operating point of 2–2000 Lux, the motion detector is perfectly suited for controlling lights and lighting systems.

	IECEx / ATEX					
Zone	0	1	2	20	21	22
Installation in		•	•		•	•

Selection Table

Design		Motion sensor					
Width	Height	Length	Product Type	Art. No.	Listprice €	PS	Weight kg
195 mm	172 mm	195 mm	8265/53	258122	1065.00	13	8.183

Technical Data

Explosion Protection	
IECEx gas explosion protection	Ex db IIC T6 Gb
IECEx dust explosion protection	Ex tb IIIC T80 °C Db
ATEX gas explosion protection	Ⓔx II 2 G Ex db IIC T6 Gb
ATEX dust explosion protection	Ⓔx II 2 D Ex tb IIIC T80 °C Db
Certificates	ATEX (PTB), Brazil (ULB), China (NEPSI), IECEx (PTB)
Notes	Product label may vary. Series devices have certification according to ATEX and IECEX.
Electrical Data	
Rated operational voltage min. AC	230 V
Rated operational voltage max. AC	240 V
Ambient Conditions	
Ambient temperature	-20 °C ... +50 °C
Mechanical Data	
Degree of protection (IP)	IP66
Degree of protection note	With silicone seal
Enclosure material	Aluminium, copper-free, Seawater-resistant
Material note	For long-term use in marine environments, we recommend painting the unit
Components	
Stopping plug	2 x CMP-757D MsNi M20

Technical Data

Components	
Sopping plug note	With white seal PA M20

Accessories

Figure	Description	Art. No.	Listprice €	PS	Weight kg
Cable glands made of metal					
	RapidEx liquid pour sealing system Cable entry with compound CMP-20PXSS2K-REX KLE MsNi M20	246605	59.50	10	0.200
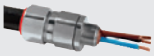	RapidEx liquid pour sealing system Cable entry with compound CMP-20PX2K-REX KLE MsNi M20 for reinforced conductors	246649	71.00	10	0.240

Spare Parts

Figure	Description	Art. No.	Listprice €	PS	Weight kg
Cover with inspection window					
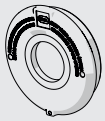	for enclosure size 3 visible part of window Ø 141 mm	143452	282.80	E1	2.232

Dimensional Drawings (All Dimensions in mm [inches]) – Subject to Alterations

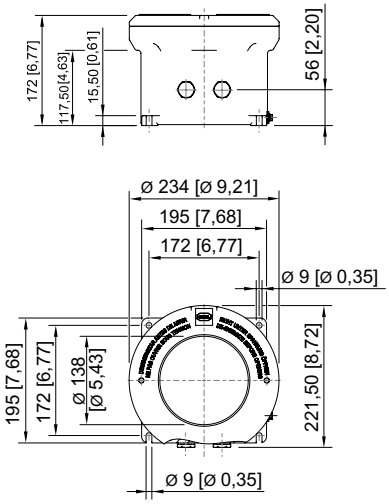

Enclosure size 3 with inspection window

E4



- Disconnection in the event that a user-defined temperature is exceeded or fallen below, switching capacity up to 25 A
- Permanent disconnection in the event of leak in the liquid-filled measuring system
- Standardised versions available in Series 8146 Ex e enclosure. Customised solutions available on request.

WebCode **8146K**

R. STAHL safety temperature monitor and limiters perform various tasks: They disconnect the system after an adjustable limit value is exceeded, whereby limiters remain disconnected, while controllers switch back on again when the permissible temperature is reached. Both switch off in the event of leak in the system. The set value can be seen from the outside through the inspection window.

	IECEx / ATEX					
Zone	0	1	2	20	21	22
Installation in		•	•		•	•

Selection Table

Product Description Cable entries	Safety temperature limiter 1 x M20 Ø 4 – 13 mm				
Measuring range	Product Type	Art. No.	Listprice €	PS	Weight kg
Safety temperature limiter: 0 ... +120 °C	8146/5041-STB25A/+0...+120°C	136011	899.00	14	1.000
Product Description Cable entries	Safety temperature monitor 1 x M20 Ø 4 – 13 mm				
Measuring range	Product Type	Art. No.	Listprice €	PS	Weight kg
Safety temperature monitor: -20 ... +50 °C	8146/5041-STW25A/-20- +50°C	136043	899.00	14	1.000
Safety temperature monitor: 0 ... +190 °C	8146/5041-STW25A/0- +190°C	136081	899.00	14	1.000
Product Description Cable entries	Safety temperature monitor and a safety temperature limiter 2 x M20 Ø 4 – 13 mm				
Measuring range	Product Type	Art. No.	Listprice €	PS	Weight kg
Safety temperature limiter: 0 ... 190 °C Safety temperature monitor: 0 ... +120 °C	8146/5051-STW25A+STB25A	269562	1599.00	14	1.440

Technical Data

Explosion Protection	
IECEx gas explosion protection	Ex db eb IIC T6 Gb
IECEx dust explosion protection	Ex tb IIIC T80 °C Db
ATEX gas explosion protection	Ⓔx II 2 G Ex db eb IIC T6 Gb
ATEX dust explosion protection	Ⓔx II 2 D Ex tb IIIC T80 °C Db
EAC gas explosion protection	1 Ex e IIC T6...T3 Gb X

Safety Temperature Monitor and Limiter
Series 8146/5

Technical Data	
Explosion Protection	
EAC dust explosion protection	Ex tb IIIC T80°C...T130°C Db X
Certificates	ATEX (PTB), China (NEPSI), IECEx (PTB)
Notes	CCC certificate available from 2021 onward
Electrical Data	
Rated operational voltage AC	230 V
Rated operational current	25 A (T6)
Notes	Change-over contact, specific to safety temperature monitors and limiters in acc. with EN 14597: - the power can be switched via contact path 1-2 - the contact path 1-4 is used for signalling purposes
Output	
Output max. load AC	1 ... 2 230 V AC1 / 25 A 1 ... 4 230 V AC1 / 2 A
Ambient Conditions	
Ambient temperature	-60 °C ... +40 °C
Mechanical Data	
Degree of protection (IP)	IP66
Enclosure material	Polyester resin, Glass fibre reinforced
Capillary tube length	1 m
Capillary tube diameter	1.5 mm
Contacts	1 change-over contact
Components	
Material cable gland	Polyamide, black

Dimensional Drawings (All Dimensions in mm [inches]) – Subject to Alterations

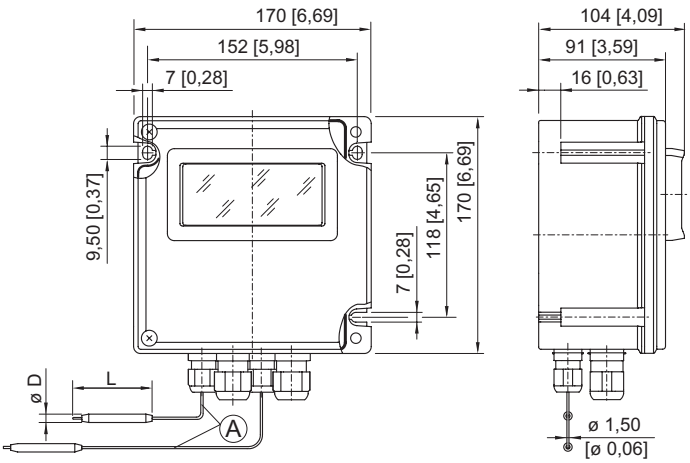

8146/5051-STW+STB
Safety temperature monitor and limiter
Combination device

E4

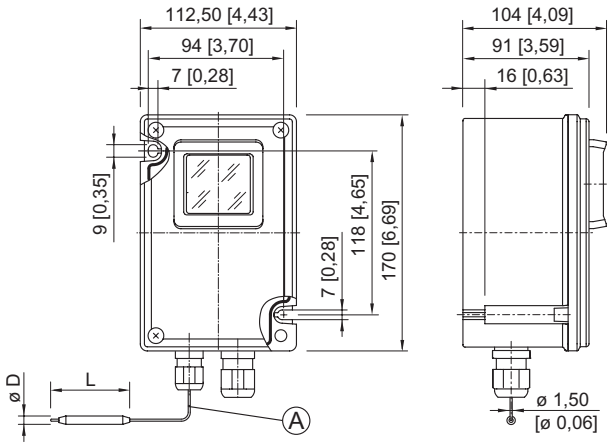

8146/5041-...
Safety temperature monitor and limiter
Single device

LOAD DISCONNECTED SWITCHES AND MOTOR STARTERS



Product	Installation in Zone						Series	Page	WebCode
	0	1	2	20	21	22			
Motor Protection Circuit Breakers									
Motor Protection Circuit Breaker		•	•		•	•	8146/5-V27	399	8146N
Safety Switches									
Safety Switches		•	•		•	•	8537	397	8537A
Safety Switches made of Polyester Resin		•	•		•	•	8146/5-V37	387	8146L
Safety Switches made of Stainless Steel		•	•		•	•	8150/5-V37	394	8150F

For additional products and information please refer to r-stahl.com



- Can be used with conventional drives and drives controlled by frequency converters
- Intelligent design: A single rotary actuator for actuating both main and auxiliary contacts, ≥ 20 ms leading auxiliary contact for safely disconnecting the frequency converter
- Version complies with IEC/EN 62626-1, Class 1
- The rotary actuator can be locked with 3 padlocks in the 0-position

WebCode **8146L**

R. STAHL's 8146/5-V37 series safety switches safely disconnect the power supply to machinery and system components for cleaning and repair as prescribed. They can be used at frequencies from 5 to 400 Hz. All of the installed load disconnect switches have an AC-3 switching capacity. The switches can be locked in the 0-position using padlocks.

	IECEx / ATEX					
Zone	0	1	2	20	21	22
Installation in		•	•		•	•

Selection Table

Rated operational current 10 A
Rated operational voltage AC 690 V
Gas temperature class T6

Detailed number of poles	Colour of handle	Additional terminal	Entry type	Cable gland	Auxiliary contact NC	Auxiliary contact NO	Product Type	Art. No.	Listprice €	PS	Weight kg
3-pole	Black shroud and handle	Standard (without)	Brass plate with 8161	2 x M25 Ø 7 ... 17 mm 1 x M20 Ø 4 ... 13 mm	Without	1 NO / delayed	8146/5-V37-300-50-0050	220275▲	280.60	12	1.700
	Yellow shroud, red handle	Standard (without)	Brass plate with 8161	2 x M25 Ø 7 ... 17 mm 1 x M20 Ø 4 ... 13 mm	Without	1 NO / delayed	8146/5-V37-300-50-1050	220277	280.60	12	1.700

Safety Switches made of Polyester Resin

Series 8146/5-V37

Selection Table

Rated operational current Rated operational voltage AC Gas temperature class			12 A / 16 A 690 V / 690 V T6								
Detailed number of poles	Colour of handle	Additional terminal	Entry type	Cable gland	Auxiliary contact NC	Auxiliary contact NO	Product Type	Art. No.	Listprice €	PS	Weight kg
3-pole	Black shroud and handle	Standard (without)	Brass plate with 8161	2 x M25 Ø 7 ... 17 mm 1 x M20 Ø 4 ... 13 mm	Without	1 NO / delayed	8146/5-V37-301-50-0050	147855▲	301.80	12	0.962
		With N-terminal	Brass plate with 8161	2 x M25 Ø 7 ... 17 mm 1 x M20 Ø 4 ... 13 mm	Without	1 NO / delayed	8146/5-V37-301-50-0150	147857	317.90	12	0.982
	Yellow shroud, red handle	Standard (without)	Brass plate with 8161	2 x M25 Ø 7 ... 17 mm 1 x M20 Ø 4 ... 13 mm	Without	1 NO / delayed	8146/5-V37-301-50-1050	147856▲	301.80	12	0.958
		With N-terminal	Brass plate with 8161	2 x M25 Ø 7 ... 17 mm 1 x M20 Ø 4 ... 13 mm	Without	1 NO / delayed	8146/5-V37-301-50-1150	147858	317.90	12	0.978
Rated operational current Rated operational voltage AC Gas temperature class			16 A 690 V T4								
Detailed number of poles	Colour of handle	Additional terminal	Entry type	Cable gland	Auxiliary contact NC	Auxiliary contact NO	Product Type	Art. No.	Listprice €	PS	Weight kg
3-pole	Yellow shroud, red handle	Main contact on terminals	Standard 8161, moulded material	2 x M32 Ø 9 ... 21 mm 1 x M20 Ø 4 ... 13 mm	Without	Without	8146/5-V37-302-00-1510	226354	404.90	12	2.500
Rated operational current Rated operational voltage AC Gas temperature class			16 A 690 V T6								
Detailed number of poles	Colour of handle	Additional terminal	Entry type	Cable gland	Auxiliary contact NC	Auxiliary contact NO	Product Type	Art. No.	Listprice €	PS	Weight kg
3-pole	Black shroud and handle	Standard (without)	Brass plate with 8161	2 x M25 Ø 7 ... 17 mm 1 x M20 Ø 4 ... 13 mm	Without	1 NO / delayed	8146/5-V37-302-50-0050	201404▲	360.30	12	1.590
		With PTC resistor terminal	Brass plate with 8161	2 x M25 Ø 7 ... 17 mm 1 x M20 Ø 4 ... 13 mm	Without	1 NO / delayed	8146/5-V37-302-50-0250	222088	407.00	12	1.590
	Yellow shroud, red handle	Standard (without)	Brass plate with 8161	2 x M25 Ø 7 ... 17 mm 1 x M20 Ø 4 ... 13 mm	Without	1 NO / delayed	8146/5-V37-302-50-1050	201405▲	367.70	12	1.590
		With N-terminal	Brass plate with 8161	2 x M25 Ø 7 ... 17 mm 1 x M20 Ø 4 ... 13 mm	Without	1 NO / delayed	8146/5-V37-302-50-1150	201406	436.50	12	1.590
6-pole	Black shroud and handle	Standard (without)	Standard 8161, moulded material	4 x M25 Ø 7 ... 17 mm 1 x M20 Ø 4 ... 13 mm	Without	2 NO / 1x delayed	8146/5-V37-602-60-0010	201420▲	633.40	12	2.640
	Yellow shroud, red handle	Standard (without)	Standard 8161, moulded material	4 x M25 Ø 7 ... 17 mm 1 x M20 Ø 4 ... 13 mm	Without	2 NO / 1x delayed	8146/5-V37-602-60-1010	201421	633.40	12	2.640

▲ Preferred products – in stock or available at short notice

Selection Table

Rated operational current Rated operational voltage AC Gas temperature class			20 A 690 V T6								
Detailed number of poles	Colour of handle	Additional terminal	Entry type	Cable gland	Auxiliary contact NC	Auxiliary contact NO	Product Type	Art. No.	Listprice €	PS	Weight kg
3-pole	Black shroud and handle	Standard (without)	Standard 8161, moulded material	2 x M32 Ø 13 ... 21 mm 1 x M20 Ø 4 ... 13 mm	Without	1 NO / delayed	8146/5-V37-303-50-0010	220278▲	349.50	12	2.020
	Yellow shroud, red handle	Standard (without)	Standard 8161, moulded material	2 x M25 Ø 7 ... 17 mm 1 x M20 Ø 4 ... 13 mm	Without	1 NO / delayed	8146/5-V37-303-50-1010	220279	364.50	12	2.020
Rated operational current Rated operational voltage AC Gas temperature class			25 A 690 V T6								
Detailed number of poles	Colour of handle	Additional terminal	Entry type	Cable gland	Auxiliary contact NC	Auxiliary contact NO	Product Type	Art. No.	Listprice €	PS	Weight kg
3-pole	Black shroud and handle	Standard (without)	Standard 8161, moulded material	2 x M32 Ø 9 ... 21 mm 1 x M20 Ø 4 ... 13 mm	Without	1 NO / delayed	8146/5-V37-304-50-0010	201422▲	449.50	12	1.960
	Yellow shroud, red handle	Standard (without)	Standard 8161, moulded material	2 x M32 Ø 9 ... 21 mm 1 x M20 Ø 4 ... 13 mm	Without	1 NO / delayed	8146/5-V37-304-50-1010	201423▲	453.70	12	2.020
		With N-terminal	Standard 8161, moulded material	2 x M32 Ø 9 ... 21 mm 1 x M20 Ø 4 ... 13 mm	Without	1 NO / delayed	8146/5-V37-304-50-1110	201462	530.60	12	2.020
6-pole	Black shroud and handle	Standard (without)	Standard 8161, moulded material	4 x M25 Ø 7 ... 17 mm 1 x M20 Ø 4 ... 13 mm	Without	2 NO / 1x delayed	8146/5-V37-604-60-0010	201464	884.00	12	2.790
	Yellow shroud, red handle	Standard (without)	Standard 8161, moulded material	4 x M25 Ø 7 ... 17 mm 1 x M20 Ø 4 ... 13 mm	Without	2 NO / 1x delayed	8146/5-V37-604-60-1010	201447	848.00	12	2.790
Rated operational current Rated operational voltage AC Gas temperature class			40 A 690 V T4								
Detailed number of poles	Colour of handle	Additional terminal	Entry type	Cable gland	Auxiliary contact NC	Auxiliary contact NO	Product Type	Art. No.	Listprice €	PS	Weight kg
3-pole	Yellow shroud, red handle	Main contact on terminals	Standard 8161, moulded material	2 x M40 Ø 12 ... 28 mm 1 x M20 Ø 4 ... 13 mm	Without	Without	8146/5-V37-305-00-1510	226355	956.70	12	7.500

E7

▲ Preferred products – in stock or available at short notice

Safety Switches made of Polyester Resin

Series 8146/5-V37

Selection Table

Rated operational current Rated operational voltage AC Gas temperature class			40 A 690 V T6								
Detailed number of poles	Colour of handle	Additional terminal	Entry type	Cable gland	Auxiliary contact NC	Auxiliary contact NO	Product Type	Art. No.	Listprice €	PS	Weight kg
3-pole	Black shroud and handle	Standard (without)	Standard 8161, moulded material	2 x M40 Ø 12 ... 28 mm	Without	Without	8146/5-V37-305-00-0010-K	242415	722.90	12	5.520
		Standard (without)	Standard 8161, moulded material	2 x M40 Ø 12 ... 28 mm 1 x M20 Ø 4 ... 13 mm	1 NC	1 NO / delayed	8146/5-V37-305-51-0010-K	200206▲	721.40	12	5.560
	Yellow shroud, red handle	Standard (without)	Standard 8161, moulded material	2 x M40 Ø 12 ... 28 mm 1 x M20 Ø 4 ... 13 mm	1 NC	1 NO / delayed	8146/5-V37-305-51-1010-K	200207	803.00	12	5.520
		With N-terminal	Standard 8161, moulded material	2 x M40 Ø 12 ... 28 mm 1 x M20 Ø 4 ... 13 mm	1 NC	1 NO / delayed	8146/5-V37-305-51-1110-K	200208	772.10	12	5.900
6-pole	Black shroud and handle	Standard (without)	Standard 8161, moulded material	4 x M40 Ø 12 ... 28 mm 1 x M20 Ø 4 ... 13 mm	1 NC	1 NO / delayed	8146/5-V37-605-51-0010-K	200290	1516.10	12	10.960
	Yellow shroud, red handle	Standard (without)	Standard 8161, moulded material	2 x M40 Ø 12 ... 28 mm 1 x M20 Ø 4 ... 13 mm	1 NC	1 NO / delayed	8146/5-V37-605-51-1010-K	200321	1574.70	12	10.960
Rated operational current Rated operational voltage AC Gas temperature class			63 A 690 V T4								
Detailed number of poles	Colour of handle	Additional terminal	Entry type	Cable gland	Auxiliary contact NC	Auxiliary contact NO	Product Type	Art. No.	Listprice €	PS	Weight kg
3-pole	Yellow shroud, red handle	Main contact on terminals	Standard 8161, moulded material	2 x M50 Ø 16 ... 35 mm 1 x M20 Ø 4 ... 13 mm	Without	Without	8146/5-V37-306-00-1510	226356	1304.80	12	10.700
Rated operational current Rated operational voltage AC Gas temperature class			63 A / 80 A 690 V / 500 V T6								
Detailed number of poles	Colour of handle	Additional terminal	Entry type	Cable gland	Auxiliary contact NC	Auxiliary contact NO	Product Type	Art. No.	Listprice €	PS	Weight kg
3-pole	Black shroud and handle	Standard (without)	Standard 8161, moulded material	2 x M50 Ø 16 ... 35 mm	Without	Without	8146/5-V37-306-00-0010-K	242416	1223.00	12	5.680
		Standard (without)	Standard 8161, moulded material	2 x M50 Ø 16 ... 35 mm 1 x M20 Ø 4 ... 13 mm	1 NC	1 NO / delayed	8146/5-V37-306-51-0010-K	200558	1240.10	12	5.680
		Standard (without)	Standard 8161, moulded material	2 x M50 Ø 16 ... 35 mm 1 x M20 Ø 4 ... 13 mm	1 NC	1 NO / delayed	8146/5-V37-306-51-0010	213395	1261.30	12	7.550
	Yellow shroud, red handle	Standard (without)	Standard 8161, moulded material	2 x M50 Ø 16 ... 35 mm 1 x M20 Ø 4 ... 13 mm	1 NC	1 NO / delayed	8146/5-V37-306-51-1010-K	200559	1292.80	12	5.680
		Standard (without)	Standard 8161, moulded material	2 x M50 Ø 16 ... 35 mm 1 x M20 Ø 4 ... 13 mm	1 NC	1 NO / delayed	8146/5-V37-306-51-1010	213396	1261.30	12	7.550
6-pole	Black shroud and handle	Standard (without)	Standard 8161, moulded material	4 x M50 Ø 16 ... 35 mm 1 x M20 Ø 4 ... 13 mm	1 NC	1 NO / delayed	8146/5-V37-606-51-0010	200574	2233.20	12	10.100

▲ Preferred products – in stock or available at short notice

Selection Table

Rated operational current Rated operational voltage AC Gas temperature class			80 A 500 V T4								
Detailed number of poles	Colour of handle	Additional terminal	Entry type	Cable gland	Auxiliary contact NC	Auxiliary contact NO	Product Type	Art. No.	Listprice €	PS	Weight kg
3-pole	Yellow shroud, red handle	Main contact on terminals	Standard 8161, moulded material	2 x M63 Ø 28 ... 48 mm 1 x M20 Ø 4 ... 13 mm	Without	Without	8146/5-V37-307-00-1510	226357	1489.70	12	14.400
Rated operational current Rated operational voltage AC Gas temperature class			125 A / 160 A 690 V / 400 V T6								
Detailed number of poles	Colour of handle	Additional terminal	Entry type	Cable gland	Auxiliary contact NC	Auxiliary contact NO	Product Type	Art. No.	Listprice €	PS	Weight kg
3-pole	Black shroud and handle	Standard (without)	Standard 8161, moulded material	2 x M63 Ø 28 ... 48 mm 1 x M20 Ø 4 ... 13 mm	1 NC	1 NO / delayed	8146/5-V37-308-51-0010-K	201397	2862.60	12	14.350
		Standard (without)	Standard 8161, moulded material	2 x M63 Ø 28 ... 48 mm 1 x M20 Ø 4 ... 13 mm	1 NC	1 NO / delayed	8146/5-V37-308-51-0010	212209	2989.10	12	18.500
	Yellow shroud, red handle	Standard (without)	Standard 8161, moulded material	2 x M63 Ø 28 ... 48 mm 1 x M20 Ø 4 ... 13 mm	1 NC	1 NO / delayed	8146/5-V37-308-51-1010-K	201398	2862.60	12	14.350
Rated operational current Rated operational voltage AC Gas temperature class			180 A 400 V T4								
Detailed number of poles	Colour of handle	Additional terminal	Entry type	Cable gland	Auxiliary contact NC	Auxiliary contact NO	Product Type	Art. No.	Listprice €	PS	Weight kg
3-pole	Black shroud and handle	Standard (without)	Standard 8161, moulded material	2 x M63 Ø 28 ... 48 mm 1 x M20 Ø 4 ... 13 mm	1 NC	1 NO / delayed	8146/5-V37-310-51-0010-K	213476	3435.40	12	14.360
		Standard (without)	Brass plate with drilled holes	2 x M63 1 x M20	1 NC	1 NO / delayed	8146/5-V37-310-51-0040-K	213479	3647.90	12	15.140

Technical Data

Variant	Gas temperature class T6	Gas temperature class T4
Explosion Protection		
IECEx gas explosion protection	Ex db eb IIC T6 Gb	Ex db eb IIC T4 Gb
IECEx dust explosion protection	Ex tb IIIC T80 °C Db	Ex tb IIIC T130 °C Db
ATEX gas explosion protection	Ⓔx II 2 G Ex db eb IIC T6 Gb	Ⓔx II 2 G Ex db eb IIC T4 Gb
ATEX dust explosion protection	Ⓔx II 2 D Ex tb IIIC T80 °C Db	Ⓔx II 2 D Ex tb IIIC T130 °C Db
Certificates	ATEX (PTB), China (NEPSI), IECEx (PTB)	ATEX (PTB), China (NEPSI), IECEx (PTB)
Electrical Data		
Notes	Auxiliary contact NO (1 x ON delayed - OFF leading)	
Ambient Conditions		
Notes	Information regarding ambient conditions can be found on the Internet at r-stahl.com. WebCode 8146L	
Mechanical Data		
Degree of protection (IP)	IP66	IP66
Degree of protection note	acc. to EN/IEC 60529	acc. to EN/IEC 60529
Enclosure material	Polyester resin, Glass fibre reinforced	Polyester resin, Glass fibre reinforced
Type of connection cable	Solid Finely stranded	Finely stranded Solid
Seal	Silicone, foamed	Silicone, foamed
Seal Notes	Seal optional: EPDM	Seal optional: EPDM

Safety Switches made of Polyester Resin
Series 8146/5-V37

Technical Data

Variant	Gas temperature class T6	Gas temperature class T4
Mechanical Data		
Lockable in	3x in 0	3x in 0

Accessories

Figure	Description	Art. No.	Listprice €	PS	Weight kg
Auxiliary contact					
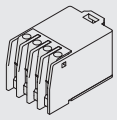	2 NC contacts (8080/1-3) 250 V AC/DC max. 6 A 1.5 ... 2.5 mm² solid / finely stranded The switching function of the auxiliary contact depends on the installation slot used. Left and right: synchronising	168356	55.90	Z1	0.026
	1 NC contact + 1 NO contact (8080/1-1) 250 V AC/DC max. 6 A 1.5 ... 2.5 mm² solid / finely stranded The switching function of the auxiliary contact depends on the installation slot used. Left: delayed (ON), leading (OFF) Right: synchronising	168351	55.90	Z1	0.026
	2 NO contacts (8080/1-4) 250 V AC/DC max. 6 A 1.5 ... 2.5 mm² solid / finely stranded The switching function of the auxiliary contact depends on the installation slot used. Left and right: synchronising	168353	55.90	Z1	0.026

Dimensional Drawings (All Dimensions in mm [inches]) – Subject to Alterations

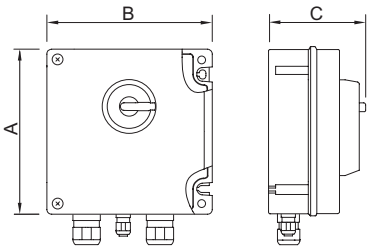

E7

Version	Rated operational current	Product Type	Dimension A [mm]	Dimension B [mm]	Dimension C [mm]
3-pole	10, 12 / 16 A	8146/5-V37-300-50-... 8146/5-V37-301-50-...	112.5 112.5	112.5 112.5	131 131
	16 A	8146/5-V37-302-50-... 8146/5-V37-302-..-.5.. 8150/5-V37-302-50-... 8146/5-V37-302-50-0250	170 340.5 176.5 227	112.5 170 176.5 112.5	132 132 132 172
	20 A	8146/5-V37-303-50-...	170	170	132
	25 A	8146/5-V37-304-50-... 8150/5-V37-304-50-...	170 176.5	170 176.5	132 132
	40 A	8146/5-V37-305-....-K 8146/5-V37-305-..-.5.. 8150/5-V37-305-...-K	340.5 340.5 360	170 340.5 176.5	176.5 195 194
	63 / 80 A	8146/5-V37-306-...-K 8146/5-V37-306-... 8146/5-V37-306-..-.5.. 8150/5-V37-306-S1-...	340.5 340.5 681.5 360	170 340.5 340.5 360	195 195 195 196
	80 A	8146/5-V37-307-..-.5..	681.5	340.5	195
	125 / 160 A	8146/5-V37-308-..-K 8146/5-V37-308-...	681.5 681.5	340.5 681.5	205 205
	180 A	8146/5-V37-310-..-K 8146/5-V37-310-...	681.5 681.5	340.5 681.5	205 205
6-pole	16 A	8146/5-V37-602-60-...	170	170	172
	25 A	8146/5-V37-604-60-...	227	170	172
	40 A	8146/5-V37-605-....-K	340.5	340.5	205
	63 / 80 A	8146/5-V37-606-...	681.5	340.5	205
	125 / 160 A	8146/5-V37-608-...	1023	681.5	243
	180 A	8146/5-V37-610-...	1023	681.5	243

Safety Switches made of Stainless Steel
Series 8150/5-V37



- Can be used with conventional drives and drives controlled by frequency converters
- Intelligent design: A single rotary actuator for actuating both main and auxiliary contacts, ≥ 20 ms leading auxiliary contact for safely disconnecting the frequency converter
- Version complies with IEC/EN 62626-1, Class 1
- The rotary actuator can be locked with 3 padlocks in the 0-position

WebCode 8150F

R. STAHL's 8150/5-V37 series safety switches safely disconnect the power supply to machinery and system components for cleaning and repair as prescribed. They can be used at frequencies from 5 to 400 Hz. All of the installed load disconnect switches have an AC-3 switching capacity. The switches can be locked in the 0-position using padlocks.

	IECEx / ATEX					
Zone	0	1	2	20	21	22
Installation in		•	•		•	•

Selection Table

Detailed number of poles	Colour of handle	Auxiliary contact NC	Auxiliary contact NO	Cable gland	Product Type	Art. No.	Listprice €	PS	Weight kg
Rated operational current 16 A Rated operational voltage AC 690 V									
3-pole	Black shroud and handle	Without	1 NO / delayed	2 x M25 Ø 7 ... 17 mm 1 x M20 Ø 4 ... 13 mm	8150/5-V37-302-50-0010	214171	705.60	12	3.250
	Yellow shroud, red handle	Without	1 NO / delayed	2 x M25 Ø 7 ... 17 mm 1 x M20 Ø 4 ... 13 mm	8150/5-V37-302-50-1010	222688	735.50	12	3.250
Rated operational current 25 A Rated operational voltage AC 690 V									
3-pole	Black shroud and handle	Without	1 NO / delayed	2 x M32 Ø 9 ... 21 mm 1 x M20 Ø 4 ... 13 mm	8150/5-V37-304-50-0010	214172	767.20	12	3.300
Rated operational current 40 A Rated operational voltage AC 690 V									
3-pole	Black shroud and handle	1 NC	1 NO / delayed	2 x M40 Ø 12 ... 28 mm 1 x M20 Ø 4 ... 13 mm	8150/5-V37-305-51-0010-K	214173	1313.30	12	8.360
Rated operational current 63 A / 80 A Rated operational voltage AC 690 V / 500 V									
3-pole	Black shroud and handle	1 NC	1 NO / delayed	2 x M50 Ø 16 ... 35 mm 1 x M20 Ø 4 ... 13 mm	8150/5-V37-306-51-0010-K	214174	1608.80	12	12.600

E7

Technical Data	
Explosion Protection	
IECEx gas explosion protection	Ex db eb IIC T6 Gb
IECEx dust explosion protection	Ex tb IIIC T80 °C Db
ATEX gas explosion protection	II 2 G Ex db eb IIC T6 Gb
ATEX dust explosion protection	II 2 D Ex tb IIIC T80 °C Db
Certificates	ATEX (PTB), China (NEPSI), IECEx (PTB)
Electrical Data	
Notes	Auxiliary contact NO (1 x ON delayed - OFF leading)
Ambient Conditions	
Notes	Information regarding ambient conditions can be found on the Internet at r-stahl.com. WebCode 8150F
Mechanical Data	
Degree of protection (IP)	IP66
Degree of protection note	acc. to EN/IEC 60529
Enclosure material	1.4404 stainless steel, (AISI 316L), brush finished
Additional terminal	Standard (without)
Type of connection cable	Finely stranded Solid
Seal	Silicone, foamed
Lockable in	3x in 0
Components	
Entry type	Standard 8161, moulded material

Dimensional Drawings (All Dimensions in mm [inches]) – Subject to Alterations

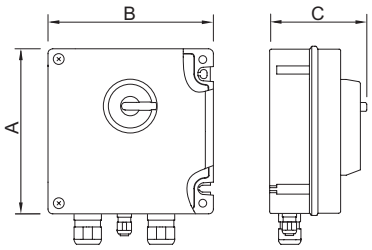

Version	Rated operational current	Product Type	Dimension A [mm]	Dimension B [mm]	Dimension C [mm]
3-pole	10, 12 / 16 A	8146/5-V37-300-50-... 8146/5-V37-301-50-...	112.5 112.5	112.5 112.5	131 131
	16 A	8146/5-V37-302-50-... 8146/5-V37-302-..-.5.. 8150/5-V37-302-50-... 8146/5-V37-302-50-0250	170 340.5 176.5 227	112.5 170 176.5 112.5	132 132 132 172
	20 A	8146/5-V37-303-50-...	170	170	132
	25 A	8146/5-V37-304-50-... 8150/5-V37-304-50-...	170 176.5	170 176.5	132 132
	40 A	8146/5-V37-305-....-K 8146/5-V37-305-..-.5.. 8150/5-V37-305-...-K	340.5 340.5 360	170 340.5 176.5	176.5 195 194
	63 / 80 A	8146/5-V37-306-...-K 8146/5-V37-306-... 8146/5-V37-306-..-.5.. 8150/5-V37-306-S1-...	340.5 340.5 681.5 360	170 340.5 340.5 360	195 195 195 196
	80 A	8146/5-V37-307-..-.5..	681.5	340.5	195
	125 / 160 A	8146/5-V37-308-..-K 8146/5-V37-308-...	681.5 681.5	340.5 681.5	205 205
	180 A	8146/5-V37-310-..-K 8146/5-V37-310-...	681.5 681.5	340.5 681.5	205 205
6-pole	16 A	8146/5-V37-602-60-...	170	170	172
	25 A	8146/5-V37-604-60-...	227	170	172
	40 A	8146/5-V37-605-....-K	340.5	340.5	205
	63 / 80 A	8146/5-V37-606-...	681.5	340.5	205
	125 / 160 A	8146/5-V37-608-...	1023	681.5	243
	180 A	8146/5-V37-610-...	1023	681.5	243



- Motor switching capacity AC-3 and AC-23 acc. to IEC 60947-3, EN 60947, DIN VDE 0660 Part 107
- With or without load-shedding contact
- Positive opening operation of the main contacts
- Isolating characteristics acc. to DIN VDE 0660
- Padlockable in “OFF” position with padlocks
- Rotary actuator with clear switching position
- High level of corrosion resistance in external components
- Marked with signal orange label “Safety Switch”

WebCode **8537A**

Safety switches ensure the obligatory disconnection of the machines and installations from the energy supply during cleaning and repair work. Usual preparatory work such as removal of fuses or disconnection of motors, which can be performed only by electrically skilled persons, is no longer required.

	IECEx / ATEX					
Zone	0	1	2	20	21	22
Installation in		•	•		•	•

Selection Table

Rated operational current 250 A
Rated operational voltage AC 690 V

Figure	Cable gland	Product Type	Art. No.	Listprice €	PS	Weight kg
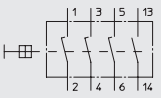	2 x M63 Ø 28 ... 48 mm 1 x M20 Ø 4 ... 13 mm	8537/7-712-7000	147467	5930.00	13	55.000

Further versions (160, 315, 400, 500 A) on request.

Technical Data

Explosion Protection	
IECEx gas explosion protection	Ex db eb IIC T5 Gb
IECEx dust explosion protection	Ex tb IIIC T95 °C
ATEX gas explosion protection	Ⓔx II 2 G Ex db eb IIC T5 Gb
ATEX dust explosion protection	Ⓔx II 2 D Ex tb IIIC T95 °C
Certificates	ATEX (PTB), IECEx (PTB)
Electrical Data	
Switching capacity note	according to IEC/EN 60947-3; DIN VDE 0660, Part 107
Switching capacity AC-3	U_e 230 V ~ = 75 kW U_e 400 V ~ = 132 kW U_e 500 V ~ = 160 kW U_e 690 V ~ = 160 kW
Switching capacity AC-23	U_e 230 V ~ = 75 kW U_e 400 V ~ = 132 kW U_e 500 V ~ = 160 kW U_e 690 V ~ = 200 kW
Auxiliary contact NO	1 NO / delayed

E7

Technical Data	
Electrical Data	
Notes	Auxiliary contact NO (1 x ON delayed - OFF leading)
Ambient Conditions	
Ambient temperature	-20 °C ... +40 °C
Notes	Information regarding ambient conditions can be found on the Internet at r-stahl.com. WebCode 8537A
Mechanical Data	
Degree of protection (IP)	IP54
Degree of protection note	IP65 with seal (accessory)
Enclosure material	Sheet steel, painted
Colour of handle	Standard black
Lockable in	3x in 0
Detailed number of poles	3-pole

Dimensional Drawings (All Dimensions in mm [inches]) – Subject to Alterations

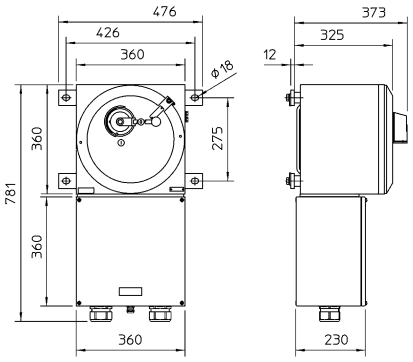

E7



- Electric line and system protection for Ex e and Ex d motors
- Robust enclosure made from glass fibre-reinforced polyester resin
- Optional: Undervoltage release, shunt trip, ammeter, auxiliary contact

WebCode **8146N**

R. STAHL's 8146/5-V27 series moulded case circuit breakers for motor protection protect Ex e and Ex d motors and their associated electric lines and systems. The standard variants feature an adjustable, phase-sensitive thermal overcurrent release or electromagnetic tripping mechanism, which has to be specified during the ordering process. They cannot be retrofitted.

	IECEx / ATEX					
Zone	0	1	2	20	21	22
Installation in		•	•		•	•

Selection Table

Auxiliary contacts	Release	Release voltage AC	Gas temperature class	Product Type	Art. No.	Listprice €	PS	Weight kg
Current-setting range		0.10 - 0.16 A						
1 NC 1 NO	Undervoltage release	400 V	T6	8146/5-V27-208-015-12-21-1	249193	1070.10	12	2.610
Current-setting range		0.25 - 0.40 A						
Without	Without	0 V	T5	8146/5-V27-101-035-00-11-1	147184	787.60	12	2.600
Current-setting range		0.40 - 0.63 A						
1 NC 1 NO	Undervoltage release	400 V	T5	8146/5-V27-208-045-12-21-2	277718	1094.30	12	2.630
Without	Without	0 V	T5	8146/5-V27-101-045-00-11-1	147185	787.60	12	2.600
	Undervoltage release	400 V	T5	8146/5-V27-108-045-10-21-1	249161	883.10	12	2.630
Current-setting range		0.63 - 1.00 A						
1 NO 1 NC	Without	0 V	T5	8146/5-V27-201-055-02-21-1	249242	846.90	12	2.600
Without	Without	0 V	T5	8146/5-V27-101-055-00-11-1	147186	787.60	12	2.600
	Undervoltage release	400 V	T5	8146/5-V27-108-055-10-21-1	249164	920.50	12	2.630

Motor Protection Circuit Breaker
Series 8146/5-V27

Selection Table

Auxiliary contacts	Release	Release voltage AC	Gas temperature class	Product Type	Art. No.	Listprice €	PS	Weight kg
Current-setting range		1.00 - 1.60 A						
1 NC 1 NO	Without	0 V	T5	8146/5-V27-201-065-02-21-1	249243	882.80	12	2.630
	Undervoltage release	230 V	T5	8146/5-V27-207-065-12-21-1	249207	1070.10	12	2.700
Without	Without	0 V	T5	8146/5-V27-101-065-00-11-1	147187	787.60	12	2.630
	Undervoltage release	230 V	T5	8146/5-V27-107-065-10-21-1	249166	920.50	12	2.700
		400 V	T5	8146/5-V27-108-065-10-21-1	249167	883.10	12	2.700
Current-setting range		1.60 - 2.50 A						
Auxiliary contacts	Release	Release voltage AC	Gas temperature class	Product Type	Art. No.	Listprice €	PS	Weight kg
1 NC 1 NO	Undervoltage release	400 V	T5	8146/5-V27-208-075-12-21-1	249211	1070.10	12	2.700
		500 V	T5	8146/5-V27-210-075-12-21-1	249212	1070.10	12	2.700
Without	Without	0 V	T5	8146/5-V27-101-075-00-11-1	147188	787.60	12	2.630
	Undervoltage release	400 V	T5	8146/5-V27-108-075-10-21-1	249170	883.10	12	2.700
	Without	0 V	T6	8146/5-V27-501-072-00-11-1	277870	957.90	12	2.700
Current-setting range		2.50 - 4.00 A						
Auxiliary contacts	Release	Release voltage AC	Gas temperature class	Product Type	Art. No.	Listprice €	PS	Weight kg
1 NO 1 NC	Without	0 V	T5	8146/5-V27-201-085-02-21-1	249245	846.90	12	2.630
Without	Without	0 V	T5	8146/5-V27-101-085-00-11-1	147189	787.60	12	2.630
	Undervoltage release	400 V	T5	8146/5-V27-108-085-10-21-1	249173	883.10	12	2.800
		400 V	T5	8146/5-V27-108-085-10-21-2	276475	866.20	12	2.800
Current-setting range		4.00 - 6.30 A						
Auxiliary contacts	Release	Release voltage AC	Gas temperature class	Product Type	Art. No.	Listprice €	PS	Weight kg
Without	Without	0 V	T5	8146/5-V27-101-095-00-11-1	147190	787.60	12	2.630
	Undervoltage release	400 V	T5	8146/5-V27-108-095-10-21-1	249176	883.10	12	2.800
Current-setting range		6.30 - 9.00 A						
Auxiliary contacts	Release	Release voltage AC	Gas temperature class	Product Type	Art. No.	Listprice €	PS	Weight kg
1 NO 1 NC	Without	0 V	T5	8146/5-V27-201-105-02-21-1	249247	880.80	12	2.850
Without	Without	0 V	T5	8146/5-V27-101-105-00-11-1	147191	820.90	12	2.850
	Undervoltage release	400 V	T5	8146/5-V27-108-105-10-21-1	249179	917.10	12	3.000
Current-setting range		9.00 - 12.50 A						
Auxiliary contacts	Release	Release voltage AC	Gas temperature class	Product Type	Art. No.	Listprice €	PS	Weight kg
Without	Without	0 V	T5	8146/5-V27-101-115-00-11-1	147192	820.90	12	3.200

Technical Data

Variant	Gas temperature class T6	Gas temperature class T5
Explosion Protection		
IECEx gas explosion protection	Ex db eb IIC T6 Gb	Ex db eb IIC T5 Gb
IECEx dust explosion protection	Ex tb IIIC T80 °C Db	Ex tb IIIC T95 °C Db
ATEX gas explosion protection	Ⓔx II 2 G Ex db eb IIC T6 Gb	Ⓔx II 2 G Ex db eb IIC T5 Gb
ATEX dust explosion protection	Ⓔx II 2 D Ex tb IIIC T80 °C Db	Ⓔx II 2 D Ex tb IIIC T95 °C Db
EAC gas explosion protection	Ex 1 Ex e * IIA ... IIC T6 ... T3 Gb X	Ex 1 Ex e * IIA ... IIC T6 ... T3 Gb X
EAC dust explosion protection	Ex Ex tb IIIC T80 °C ... T130 °C Db X	Ex Ex tb IIIC T80 °C ... T130 °C Db X
Certificates	ATEX (PTB), Canada (FM), China (NEPSI), EAC (LPE), IECEx (PTB)	ATEX (PTB), Canada (FM), China (NEPSI), EAC (LPE), IECEx (PTB)
Electrical Data		
No. of poles	3	3
Ambient Conditions		
Ambient temperature	-20°C ... +40°C	-20°C ... +40°C
Notes	Information regarding ambient conditions can be found on the Internet at r-stahl.com. WebCode 8146N	
Mechanical Data		
Degree of protection (IP)	IP66	IP66
Degree of protection note	acc. to EN/IEC 60529	acc. to EN/IEC 60529
Enclosure material	Polyester resin, Glass fibre reinforced	Polyester resin, Glass fibre reinforced
Colour of handle	Black	Black
Colour of protective collar	Black	Black
Labelling rotary actuator	0 - I	0 - I
Seal	Silicone, foamed	Silicone, foamed
Lockable in	3x in 0	3x in 0
Components		
Cable entries	3 x M25 Ø 7 – 17 mm	3 x M25 Ø 7 – 17 mm
Entry type	Standard 8161, moulded material	Standard 8161, moulded material

Dimensional Drawings (All Dimensions in mm [inches]) – Subject to Alterations

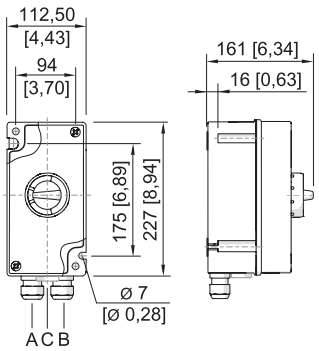

Current adjustment range up to 16 A; without auxiliary contact

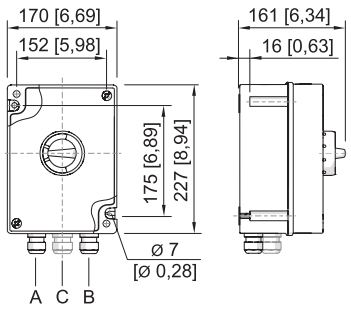

Current adjustment range up to 16 A; 1 NO / 1 NC

Cable entries

Version	Auxiliary contacts	Cable glands Series 8161		Stopping plugs Series 8290
		M25 x 1.5	M32 x 1.5	M25 x 1.5
Current adjustment range up to 16 A	without	A, B	--	C
	with	A, B, C	--	--
Current adjustment range 16 ... 20 A, 20 ... 22.5 A	without	--	A, B	C
	with	C	A, B	--

E7



COMPONENTS FOR SYSTEM SOLUTIONS

Product	Installation in Zone 0	1	2	20	21	22	Series	Page	WebCode
Ex d Technology Flameproof Enclosure Ex d Enclosures									
Light-Metal Ex d Enclosures Flameproof Enclosure		•	•		•	•	8265	403	8265A

For additional products and information please refer to r-stahl.com



- For use with sparking and non-sparking equipment in Zones 1 and 2
- Six basic enclosure sizes, optional inspection windows, direct and indirect cable entry possible
- International certification, wide temperature range, seawater-resistant light-metal enclosure
- Suitable series 8146/8150 connection-chamber enclosures possible

WebCode **8265A**

R. STAHL series 8265 Ex d enclosures are ideal for motor control units, control boxes and terminal boxes. We equip these with various components, including sparking equipment, according to customer requirements. The cable entry can be direct or indirect. The large cover opening makes commissioning and maintenance easier. Single enclosures are ideal as components in Ex e control systems. Optional, large inspection window possible.

	IECEx / ATEX					
Zone	0	1	2	20	21	22
Installation in		•	•		•	•

Selection Table

Cover		Closed						
Enclosure size	Width	Height	Length	Product Type	Art. No.	Listprice €	PS	Weight kg
1	125 mm	132 mm	125 mm	8265/01-0000	211112	97.80	13	2.750
2	155 mm	132 mm	155 mm	8265/02-0000	143409	105.70	13	3.850
5	285 mm	230 mm	285 mm	8265/05-0000	143412	717.60	13	18.300
Cover		With inspection window						
Enclosure size	Width	Height	Length	Product Type	Art. No.	Listprice €	PS	Weight kg
3	195 mm	172 mm	195 mm	8265/03-0010	143415	300.80	13	6.630
4	236 mm	227 mm	236 mm	8265/04-0010	143416	401.00	13	11.130
6	335 mm	281 mm	335 mm	8265/06-0010	143418	1096.00	13	28.800

Technical Data

Explosion Protection	
IECEx gas explosion protection	Ex db IIC Gb
IECEx dust explosion protection	Ex tb IIIC Db
ATEX gas explosion protection	Ⓔx II 2 G Ex db IIC Gb
ATEX dust explosion protection	Ⓔx II 2 D Ex tb IIIC Db
Certificates	ATEX (PTB), Brazil (ULB), EAC (CCVE), IECEx (PTB), Taiwan (ITRI)
Notes	Product label may vary. Series devices have certification according to ATEX and IECEX.
Electrical Data	
Rated operational voltage max. AC	1000 V

Technical Data	
Electrical Data	
Notes	depending on terminal types and explosion-protected components used
Ambient Conditions	
Ambient temperature	-50 °C ... +60 °C
Mechanical Data	
Degree of protection (IP)	IP54
Note on degree of protection	IP66 with O-ring silicone -60 °C ... +60 °C
Enclosure material	Aluminium, copper-free, Seawater-resistant
Material note	Where there will be direct contact with seawater, a coating is recommended.

Dimensional Drawings (All Dimensions in mm [inches]) – Subject to Alterations

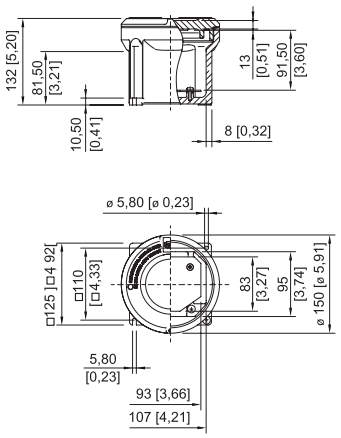

Enclosure size 1 without inspection window

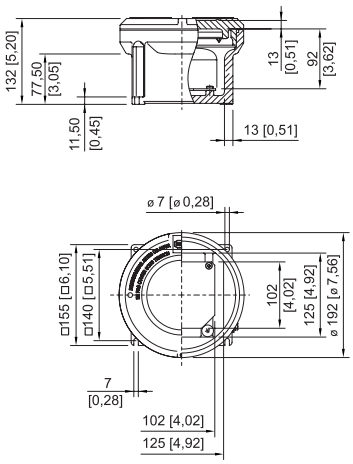

Enclosure size 2 without inspection window

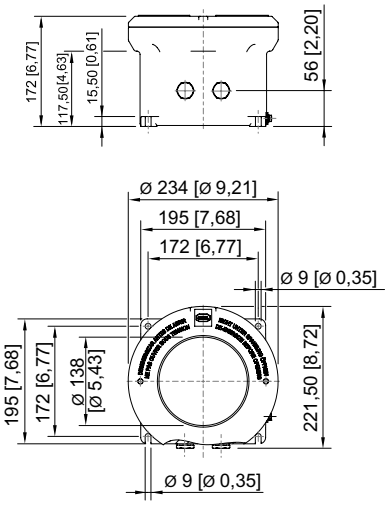

Enclosure size 3 with inspection window

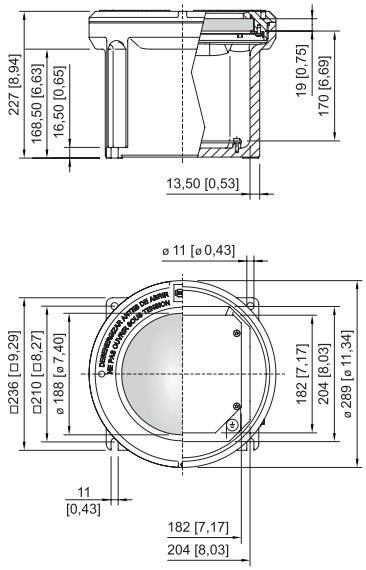

Enclosure size 4 with inspection window

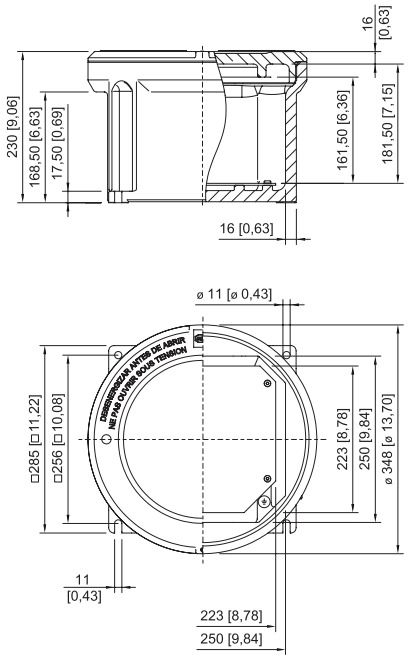

Enclosure size 5 without inspection window

E9

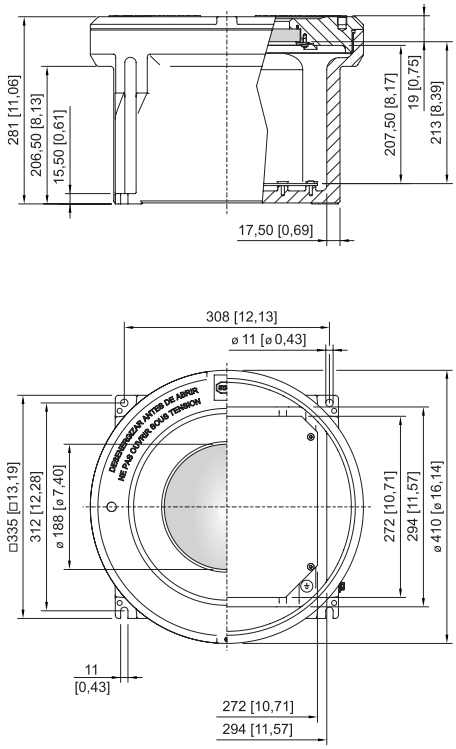

Enclosure size 6 with inspection window



INSTALLATION EQUIPMENT AND ACCESSORIES

Product	Installation in Zone 0	1	2	20	21	22	Series	Page	WebCode
Accessories									
Ingress Disk Accessories and Mounting Material for Cable Glands for closing unused CMP Cable Glands								452	SEALB
Locknut made of Metal or Polyamide Accessories and Mounting Material for Cable Glands								449	ACC1B
Seal Accessories and Mounting Material for Cable Glands for CMP Products								451	SEALA
Serrated Lock Washer Accessories and Mounting Material for Cable Glands								450	WASHA
Breather									
Breather made of Metal		•	•		•	•	CMP-781	447	781A
Breather made of Moulded Material		•	•		•	•	8162/1	445	8162A
Cable Glands Ex e									
Cable Glands		•	•		•	•	8161/7, 8161/8	410	8161B
Cable Glands for all Armouring									
Cable Glands Ex e & Ex d & Ex nR & Ex ta for all Armouring without Lead Sheath		•	•	•	•	•	E1FU	421	E1FUA
Cable Glands Ex e & Ex d & Ex nR & Ex ta for all Armouring without Lead Sheath		•	•	•	•	•	T3CDS	425	T3CDSA
Cable Glands Ex e & Ex d & Ex nR & Ex ta for all Armouring without Lead Sheath, RapidEx		•	•	•	•	•	PX2K REX	427	PX2KB
Cable Glands Ex e & Ex d & Ex nR & Ex ta for all Armouring without Lead Sheath, Stainless Steel		•	•	•	•	•	TE1FU	423	TE1FUA
Cable Glands for Unarmoured Cable									
Cable Glands Ex e & Ex d & Ex nR & Ex ta for Unarmoured Cables		•	•	•	•	•	A2F	417	A2FA
Cable Glands Ex e & Ex d & Ex nR & Ex ta for Unarmoured Cables NEW		•	•	•	•	•	A2F100	419	A2F100A
Cable Glands Ex e & Ex d & Ex nR & Ex ta for Unarmoured Cable, RapidEx		•	•	•	•	•	PXSS2K REX	429	PXSS2KB
Cable Glands – Overview									
Cable Glands – Overview								408	

Product	Installation in Zone						Series	Page	WebCode
	0	1	2	20	21	22			
Reducers, Adaptors, Enlargements									
Adaptors made of Metal		•	•	•	•	•	CMP-737D	435	737DB
Enlargements made of Moulded Material		•	•		•	•		437	ACC1A
Reducers made of Metal		•	•	•	•	•	CMP-737D	433	737DA
Reducers made of Moulded Material		•	•		•	•		431	ACC1L
Stopping Plugs									
Stopping Plugs made of Moulded Material		•	•		•	•	8290	439	8290A
Stopping Plugs with a Hexagon Head made of Metal		•	•	•	•	•	CMP-757	441	757DA
Stopping Plugs with a Truss Head made of Metal		•	•	•	•	•	CMP-767	443	767DA

For additional products and information please refer to r-stahl.com

Cable Glands – Overview

Selection Criteria

- Type of protection
- Cable diameter
- Cable structure, armouring types
- IP degree of protection
- Entry threads
- Material requirements (plastic / metal)
- Ambient temperature range
- Single and multiple cable glands, special cable shapes

The selection of the cable glands is predefined by the following criteria. The dimensions and the structure of the cable determine the type of cable gland required. The type of protection of the electrical equipment is also an important selection criterion. The cable gland must be selected in accordance with the type of protection of the enclosure.
The selection of the cable and the respective cable entry is described in IEC 60079-14. The device's IP degree of protection is affected by the type and the structure of the components.
The cable glands from R. STAHL are available in different materials. As a result, suitable materials are available for even extreme environmental conditions. A breather is recommended to prevent the build up of condensation in enclosures.

Cable Glands made of Plastic Ex e



These cable glands are suitable for cable glands in enclosures of the “increased safety” type of protection. The cable gland is suitable for permanently installed cables.
An inserted disc is used as dust protection during transport and until installation of the cable. This disc is to be removed for the cable installation or before commissioning the equipment. Unused cable glands must be sealed using suitable plugs. A seal to adjust the entry to different enclosure surfaces is included in delivery.

Cable Glands made of Metal Ex d, Ex e, Ex nR, Ex ta



The cable glands from CMP are suitable for the direct entry of cables into enclosures of the “flameproof” type of protection and for the indirect entry of cables into “increased safety” enclosures. There are versions that can be used with metal-reinforced cables and electric lines. In addition to the standard sealing of the cable sheath, secure armouring clamping is important to ensure reliable contact.
For enclosures of the “increased safety” type of protection, unused cable glands can be sealed using suitable sealing discs.
For sealing to the enclosure wall, corresponding seals are to be ordered separately.

Cable Glands with Strain Relief made of Plastic and Metal + Breather



For cables and electric lines that are not permanently installed, additional strain relief must be attached on the cable. The HSK series in plastic or the A2F100 in nickel-plated brass is used for this purpose.



The 8162 series and CMP-781 series breathers provide continuous pressure equalisation between the inside of the enclosure and the atmosphere around the enclosure. This prevents moisture from entering the enclosure via the seals and condensing inside the enclosure.

Stopping Plugs Ex e made of Plastic and Ex d, Ex e, Ex ta made of Metal



The stopping plugs in the 8290 series are suitable for sealing unused holes in the enclosures that have the “increased safety” type of protection.
They are designed to be impact resistant and have the required self-loosening protection.

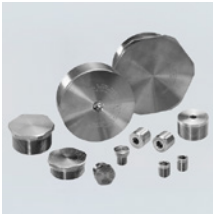

The stopping plugs made of metal can be used to seal holes that have the Ex d, Ex e and Ex type of protection.
Due to the fact that pressure-resistant enclosures cannot be drilled into easily, the use of stopping plugs enables future-proof installation, which also permits subsequent additions.

Selection Table

The most important selection criteria are listed in the following selection tables.
The selection is made according to the current standard based on the IEC/EN 60079-1.
The cable structure is also taken into account in the table. So you can quickly and easily find the right cable gland.

Selection guide: cable glands Ex e versions

Type of protection	Armouring	Material	Strain relief	Type
Ex e	unarmoured	Plastic	with	HSK
			without	8161
		Nickel - plated brass	with	A2F100
			without	TC
		Nickel - plated brass / stainless steel		A2F
	all armouring **without** lead sheath	Nickel - plated brass	without	C2KX
				C2K
	single wire / steel wire armoured (SWA)			CWe
	Wire braid / steel tape armoured			CXe
	for MC, MC-HL, interlocked and "Teck" armoured			TMC
	all armouring **without** lead sheath	Nickel - plated brass **with** double seal		T3CDS E1FU
	single wire / steel wire armoured (SWA)			E1FW
	Wire braid / steel tape armoured			E1FX
	all armouring **without** lead sheath	Stainless steel **with** double seal		TE1FU
Favourable alternative! 8161 with inner PE rail for installing the armouring				

Selection guide: cable glands Ex d versions

Type of protection	Armouring	Material	Compound	Type
Ex d	unarmoured	Nickel - plated brass	Compound	PXSS2K
			RapidEx	PXSS2KRex
	all armouring **without** lead sheath		Compound	PX2K
			RapidEx	PX2KRex
	unarmoured		no*	TC
		Nickel - plated brass / stainless steel		A2F
	unarmoured / rigid Conduit connection	Nickel - plated brass		A2FRC
	unarmoured / flexible Conduit connection			A2FFC
	all armouring **without** lead sheath	Nickel - plated brass **with** double seal		T3CDS E1FU
	wire braid / steel tape armoured			E1FW
	single wire / steel wire armoured (SWA)			E1FX
	all armouring **without** lead sheath	Stainless steel **with** double seal		TE1FU
*For direct insertion into Ex d, we generally recommend using a barrier screw connection with Compound or RapidEx				

Selection guide: cable glands Ex nR versions

Type of protection	Armouring	Material	Compound	Type
Ex nR	unarmoured	Plastic		HSK
				8161
		Nickel - plated brass		A2F100
		Nickel - plated brass / stainless steel		A2F
	all armouring **without** lead sheath	Nickel - plated brass		C2K
				C2KX
	single wire / steel wire armoured (SWA)			CWe
	Wire braid / steel tape armoured			CXe
	all armouring **without** lead sheath	Nickel - plated brass **with** double seal		T3CDS E1FU
	single wire / steel wire armoured (SWA)			E1FW
	Wire braid / steel tape armoured			E1FX
	all armouring **without** lead sheath	Stainless steel **with** double seal		TE1FU
	unarmoured / rigid Conduit connection	Nickel - plated brass		A2FRC
	unarmoured / flexible Conduit connection			A2FFC
	unarmoured			PXSS2K
				PXSS2KRex
	all armouring **without** lead sheath			PX2K
				PX2KRex

Cable Glands
Series 8161/7, 8161/8



- For safe cable entry in Ex e and Ex i areas
- Can be used at temperatures of between -60 ... +75 °C, degree of protection IP68
- Available in Ex e and Ex i versions (Ex i version distinguished by its blue cap nut)
- Suitable for cable diameters from 1 ... 48 mm
- Versions with multi-seal inserts

WebCode 8161B

R. STAHL's 8161/7 and 8161/8 series cable entries can be used to safely run cables into Ex e enclosures. They are suitable for cables between 1 and 48 mm in diameter. They are available for Ex e and Ex i circuits – the Ex i version can be distinguished by its blue cap nut. An integrated stopping plug can be used to seal any cable entries that are not being used.

	IECEx / ATEX					
Zone	0	1	2	20	21	22
Installation in		•	•		•	•

Selection Table

Product Description	Cable gland for low temperature
Ambient temperature	-60 °C ... +75 °C
Variant	Standard thread
Ex version	Ex e
Colour	Black

Thread size	Clamping range	Width across flats	Width across corners	Thread length	Dimension L	Lot size	Product Type	Art. No.	Listprice €	PS	Weight kg
M16	5 – 9 mm	20 mm	22 mm	9 mm	31 ... 37 mm	50	8161/7-M16-0905-LT	239203▲	4.70	10	0.009
M20	7 – 13 mm	24 mm	27 mm	10 mm	36 ... 43 mm	50	8161/7-M20-1307-LT	239204▲	5.60	10	0.013
M25	10 – 17 mm	29 mm	32 mm	10 mm	38 ... 46 mm	50	8161/7-M25-1710-LT	239205▲	5.60	10	0.019
M32	13 – 21 mm	36 mm	40 mm	12 mm	42 ... 50 mm	25	8161/7-M32-2113-LT	239206▲	7.60	10	0.032
M40	17 – 28 mm	46 mm	51 mm	12 mm	52 ... 65 mm	10	8161/7-M40-2817-LT	239207	14.10	10	0.068
M50	23 – 35 mm	55 mm	61 mm	14 mm	59 ... 72 mm	4	8161/7-M50-3523-LT	239208	33.70	10	0.107
M63	34 – 48 mm	68 mm	75 mm	15 mm	64 ... 78 mm	1	8161/7-M63-4834-LT	239209	60.70	10	0.155

Product Description	Cable gland for low temperature
Ambient temperature	-60 °C ... +75 °C
Variant	Standard thread
Ex version	Ex i
Colour	Blue

Thread size	Clamping range	Width across flats	Width across corners	Thread length	Dimension L	Lot size	Product Type	Art. No.	Listprice €	PS	Weight kg
M16	5 – 9 mm	20 mm	22 mm	9 mm	31 ... 37 mm	50	8161/8-M16-0905-LT	239211▲	4.70	10	0.009

Selection Table

Product Description	Cable gland for low temperature
Ambient temperature	-60 °C ... +75 °C
Variant	Standard thread
Ex version	Ex i
Colour	Blue

Thread size	Clamping range	Width across flats	Width across corners	Thread length	Dimension L	Lot size	Product Type	Art. No.	Listprice €	PS	Weight kg
M20	7 – 13 mm	24 mm	27 mm	10 mm	36 ... 43 mm	50	8161/8-M20-1307-LT	239212▲	6.10	10	0.013
M25	10 – 17 mm	29 mm	32 mm	10 mm	38 ... 46 mm	50	8161/8-M25-1710-LT	239213▲	6.10	10	0.019
M32	13 – 21 mm	36 mm	40 mm	12 mm	42 ... 50 mm	25	8161/8-M32-2113-LT	239214	7.90	10	0.032
M40	17 – 28 mm	46 mm	51 mm	12 mm	52 ... 65 mm	10	8161/8-M40-2817-LT	239215	16.50	10	0.068

Product Description	Cable gland without reduction sealing insert
Ambient temperature	-40 °C ... +75 °C
Variant	Standard thread
Ex version	Ex e
Colour	Black

Thread size	Clamping range	Width across flats	Width across corners	Thread length	Dimension L	Lot size	Product Type	Art. No.	Listprice €	PS	Weight kg
M16	5 – 9 mm	20 mm	22 mm	9 mm	31 ... 37 mm	50	8161/7-M16-0905	239171▲	3.50	10	0.009
M20	7 – 13 mm	24 mm	27 mm	10 mm	36 ... 43 mm	50	8161/7-M20-1307	239172▲	4.20	10	0.013
M25	10 – 17 mm	29 mm	32 mm	10 mm	38 ... 46 mm	50	8161/7-M25-1710	239173▲	4.20	10	0.019
M32	13 – 21 mm	36 mm	40 mm	12 mm	42 ... 50 mm	25	8161/7-M32-2113	239174▲	5.60	10	0.032
M40	17 – 28 mm	46 mm	51 mm	12 mm	52 ... 65 mm	10	8161/7-M40-2817	239175▲	10.40	10	0.068
M50	23 – 35 mm	55 mm	61 mm	14 mm	59 ... 72 mm	4	8161/7-M50-3523	239176▲	25.40	10	0.107
M63	34 – 48 mm	68 mm	75 mm	15 mm	64 ... 78 mm	1	8161/7-M63-4834	239177▲	39.70	10	0.155

Product Description	Cable gland without reduction sealing insert
Ambient temperature	-40 °C ... +75 °C
Variant	Standard thread
Ex version	Ex i
Colour	Blue

Thread size	Clamping range	Width across flats	Width across corners	Thread length	Dimension L	Lot size	Product Type	Art. No.	Listprice €	PS	Weight kg
M16	5 – 9 mm	20 mm	22 mm	9 mm	31 ... 37 mm	50	8161/8-M16-0905	239179▲	3.50	10	0.009
M20	7 – 13 mm	24 mm	27 mm	10 mm	36 ... 43 mm	50	8161/8-M20-1307	239180▲	4.60	10	0.013
M25	10 – 17 mm	29 mm	32 mm	10 mm	38 ... 46 mm	50	8161/8-M25-1710	239181▲	4.60	10	0.019
M32	13 – 21 mm	36 mm	40 mm	12 mm	42 ... 50 mm	25	8161/8-M32-2113	239182▲	6.00	10	0.032
M40	17 – 28 mm	46 mm	51 mm	12 mm	52 ... 65 mm	10	8161/8-M40-2817	239183▲	12.30	10	0.068
M50	23 – 35 mm	55 mm	61 mm	14 mm	59 ... 72 mm	4	8161/8-M50-3523	239184	26.70	10	0.107
M63	34 – 48 mm	68 mm	75 mm	15 mm	64 ... 78 mm	1	8161/8-M63-4834	239185	42.70	10	0.155

▲ Preferred products – in stock or available at short notice

Cable Glands
Series 8161/7, 8161/8

Selection Table

Product Description Ambient temperature Variant Ex version Colour			Cable gland without reduction sealing insert 15 °C ... +65 °C Standard thread Ex e Black								
Thread size	Clamping range	Width across flats	Width across corners	Thread length	Dimension L	Lot size	Product Type	Art. No.	Listprice €	PS	Weight kg
M12	3 – 6 mm	16 mm	18 mm	9 mm	29 ... 34 mm	50	8161/7-M12-0603	239170 ▲	3.80	10	0.007
Product Description Ambient temperature Variant Ex version Colour			Cable gland without reduction sealing insert 15 °C ... +65 °C Standard thread Ex i Blue								
Thread size	Clamping range	Width across flats	Width across corners	Thread length	Dimension L	Lot size	Product Type	Art. No.	Listprice €	PS	Weight kg
M12	3 – 6 mm	16 mm	18 mm	9 mm	29 ... 34 mm	50	8161/8-M12-0603	239178 ▲	3.80	10	0.007
Product Description Ambient temperature Variant Ex version Colour			Cable gland with reduction sealing insert -40 °C ... +75 °C Standard thread Ex e Black								
Thread size	Clamping range	Width across flats	Width across corners	Thread length	Dimension L	Lot size	Product Type	Art. No.	Listprice €	PS	Weight kg
M16	2 – 9 mm	20 mm	22 mm	9 mm	31 ... 37 mm	50	8161/7-M16-0902	239155 ▲	4.00	10	0.009
M20	4 – 13 mm	24 mm	27 mm	10 mm	36 ... 43 mm	50	8161/7-M20-1304	239156 ▲	4.30	10	0.013
M25	7 – 17 mm	29 mm	32 mm	10 mm	38 ... 46 mm	50	8161/7-M25-1707	239157 ▲	4.30	10	0.019
M32	9 – 21 mm	36 mm	40 mm	12 mm	42 ... 50 mm	25	8161/7-M32-2109	239158 ▲	6.30	10	0.032
M40	12 – 28 mm	46 mm	51 mm	12 mm	52 ... 65 mm	10	8161/7-M40-2812	239159 ▲	10.30	10	0.068
M50	16 – 35 mm	55 mm	61 mm	14 mm	59 ... 72 mm	4	8161/7-M50-3516	239160 ▲	24.20	10	0.107
M63	28 – 48 mm	68 mm	75 mm	15 mm	64 ... 78 mm	1	8161/7-M63-4828	239161 ▲	46.60	10	0.155
Product Description Ambient temperature Variant Ex version Colour			Cable gland with reduction sealing insert -40 °C ... +75 °C Standard thread Ex i Blue								
Thread size	Clamping range	Width across flats	Width across corners	Thread length	Dimension L	Lot size	Product Type	Art. No.	Listprice €	PS	Weight kg
M16	2 – 9 mm	20 mm	22 mm	9 mm	31 ... 37 mm	50	8161/8-M16-0902	239163 ▲	4.00	10	0.009
M20	4 – 13 mm	24 mm	27 mm	10 mm	36 ... 43 mm	50	8161/8-M20-1304	239164 ▲	4.70	10	0.013
M25	7 – 17 mm	29 mm	32 mm	10 mm	38 ... 46 mm	50	8161/8-M25-1707	239165 ▲	4.70	10	0.019
M32	9 – 21 mm	36 mm	40 mm	12 mm	42 ... 50 mm	25	8161/8-M32-2109	239166 ▲	6.30	10	0.032
M40	12 – 28 mm	46 mm	51 mm	12 mm	52 ... 65 mm	10	8161/8-M40-2812	239167 ▲	12.90	10	0.068
M63	28 – 48 mm	68 mm	75 mm	15 mm	64 ... 78 mm	1	8161/8-M63-4828	239169	50.90	10	0.155

Selection Table

Product Description	Cable gland with reduction sealing insert
Ambient temperature	15 °C ... +65 °C
Variant	Standard thread
Ex version	Ex e
Colour	Black

Thread size	Clamping range	Width across flats	Width across corners	Thread length	Dimension L	Lot size	Product Type	Art. No.	Listprice €	PS	Weight kg
M12	1 – 6 mm	16 mm	18 mm	9 mm	29 ... 34 mm	50	8161/7-M12-0601	239154▲	4.20	10	0.007

Product Description	Cable gland with reduction sealing insert
Ambient temperature	15 °C ... +65 °C
Variant	Standard thread
Ex version	Ex i
Colour	Blue

Thread size	Clamping range	Width across flats	Width across corners	Thread length	Dimension L	Lot size	Product Type	Art. No.	Listprice €	PS	Weight kg
M12	1 – 6 mm	16 mm	18 mm	9 mm	29 ... 34 mm	50	8161/8-M12-0601	239162▲	4.20	10	0.007

Purchase order quantity in [pieces], the delivery quantity is automatically rounded to the lot size.

Technical Data

Explosion Protection	
IECEx gas explosion protection	Ex eb IIC Gb
IECEx dust explosion protection	Ex tb IIIC Db
ATEX gas explosion protection	Ⓔx II 2 G Ex eb IIC Gb
ATEX dust explosion protection	Ⓔx II 2 D Ex tb IIIC Db
EAC gas explosion protection	Ex 1 Ex e II Gb X
EAC dust explosion protection	Ex Ex tb IIIC Db X
Certificates	ATEX (PTB), Brazil (ULB), EAC (LPE), IECEx (PTB), Korea (KGS)
Ambient Conditions	
Use at the height of	< 2000 m
Mechanical Data	
Material	Polyamide, Glass fibre reinforced
Degree of protection (IP)	IP66
Degree of protection note	IP68 at 5 bar 30 min. (IP protection according to IEC/EN 60529)
Self-extinguishing	Yes
Flame retardant	Yes
Halogen-free	Yes
Surface resistance	$\leq 10^{13}\ \Omega$

Accessories

Figure	Description		Art. No.	Listprice €	PS	Weight kg
Locknut, brass nickel-plated (-60 ... +75 °C) To fasten the cable glands in through holes						
	Material: Nickel-plated brass Thread size: M12	Lot size: 100	241518▲	0.30	10	0.220
	Material: Nickel-plated brass Thread size: M16	Lot size: 100	241519▲	0.50	10	0.290
	Material: Nickel-plated brass Thread size: M20	Lot size: 100	241520▲	0.60	10	0.480
	Material: Nickel-plated brass Thread size: M25	Lot size: 100	241561▲	0.70	10	0.720
	Material: Nickel-plated brass Thread size: M32	Lot size: 50	241562▲	0.90	10	0.545
	Material: Nickel-plated brass Thread size: M40	Lot size: 50	241563▲	1.30	10	1.030
	Material: Nickel-plated brass Thread size: M50	Lot size: 25	241564▲	1.50	10	0.680
	Material: Nickel-plated brass Thread size: M63	Lot size: 10	241565	3.10	10	0.499
Locknut, plastic (-40 ... +75 °C) To fasten the cable glands in through holes						
	Material: Polyamide Thread size: M12	Lot size: 100	239460▲	0.20	10	0.001
	Material: Polyamide Thread size: M16	Lot size: 100	239461▲	0.20	10	0.002
	Material: Polyamide Thread size: M20	Lot size: 100	239462▲	0.30	10	0.002
	Material: Polyamide Thread size: M25	Lot size: 100	239463▲	0.30	10	0.003
	Material: Polyamide Thread size: M40	Lot size: 50	239465▲	1.40	10	0.007
	Material: Polyamide Thread size: M50	Lot size: 25	239466	2.40	10	0.012
	Material: Polyamide Thread size: M63	Lot size: 10	239467	3.20	10	0.018

Accessories

Figure	Description		Art. No.	Listprice €	PS	Weight kg
Plug (-60 ... +75 °C) For closing unused cable glands						
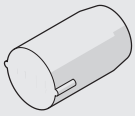	Thread size with reduction sealing insert: M12 Diameter: 3 mm Material: Polyamide	Lot size: 50	240044	1.00	10	0.001
	Thread size without reduction sealing insert: M12 Thread size with reduction sealing insert: M16 Diameter: 6 mm Material: Polyamide	Lot size: 50	240046	1.10	10	0.001
	Thread size without reduction sealing insert: M16 Thread size with reduction sealing insert: M20 Diameter: 8 mm Material: Polyamide	Lot size: 50	240048	1.10	10	0.001
	Thread size without reduction sealing insert: M20 Thread size with reduction sealing insert: M25 Diameter: 12 mm Material: Polyamide	Lot size: 50	240049	1.40	10	0.002
	Thread size without reduction sealing insert: M25 Diameter: 17 mm Material: Polyamide	Lot size: 50	240056	1.60	10	0.003
	Thread size with reduction sealing insert: M32 Diameter: 14 mm Material: Polyamide	Lot size: 50	240050	1.50	10	0.003
	Thread size without reduction sealing insert: M32 Thread size with reduction sealing insert: M40 Diameter: 20 mm Material: Polyamide	Lot size: 25	240057	1.80	10	0.004
	Thread size without reduction sealing insert: M40 Diameter: 28 mm Material: Polyamide	Lot size: 25	240059	3.30	10	0.009
	Thread size with reduction sealing insert: M50 Diameter: 25 mm Material: Polyamide	Lot size: 25	240058	2.60	10	0.007
	Thread size without reduction sealing insert: M50 Thread size with reduction sealing insert: M63 Diameter: 35 mm Material: Polyamide	Lot size: 10	240060	3.50	10	0.010
	Thread size without reduction sealing insert: M63 Diameter: 48 mm Material: Polyamide	Lot size: 10	240062	3.70	10	0.028

Dimensional Drawings (All Dimensions in mm [inches]) – Subject to Alterations

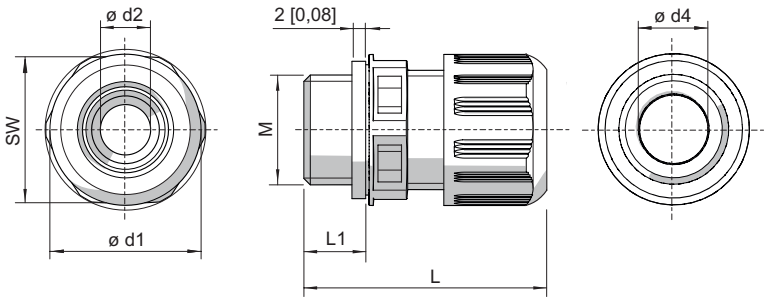

M = Thread size SW = Width across flats
L1 = Thread length L = Dimension L

Cable glands without bend protection

Thread size	Width across flats	Dimension L	Dimension L (with long thread)	Thread length	Thread length (long thread)	Clamping range	Clamping range + reduction sealing insert	Dimension d1	Dimension d2	Dimension d4
M12	16,00 mm	29 ... 34 mm	35 ... 40 mm	9.000 mm	15.000 mm	3.00 - 6.00 mm	1.00 - 6.00 mm	18 mm	7.3 mm	6.3 mm
M16	20.00 mm	31 ... 37 mm	37 ... 43 mm	9.000 mm	15.000 mm	5.00 - 9.00 mm	2.00 - 9.00 mm	22 mm	10.3 mm	9.3 mm
M20	24.00 mm	36 ... 43 mm	41 ... 48 mm	10.000 mm	15.000 mm	7.00 - 13.00 mm	4.00 - 13.00 mm	27 mm	13.3 mm	13.3 mm
M25	29.00 mm	38 ... 46 mm	43 ... 51 mm	10.000 mm	15.000 mm	10.00 - 17.00 mm	7.00 - 17.00 mm	32 mm	17.3 mm	17.3 mm
M32	36.00 mm	42 ... 50 mm	45 ... 53 mm	12.000 mm	15.000 mm	13.00 - 21.00 mm	9.00 - 21.00 mm	40 mm	21.3 mm	21.3 mm
M40	46.00 mm	52 ... 65 mm	58 ... 71 mm	12.000 mm	18.000 mm	17.00 - 28.00 mm	12.00 - 28.00 mm	51 mm	28.3 mm	30 mm
M50	55.00 mm	59 ... 72 mm	63 ... 76 mm	14.000 mm	18.000 mm	23.00 - 35.00 mm	16.00 - 35.00 mm	61 mm	35.3 mm	40 mm
M63	68.00 mm	64 ... 78 mm	67 ... 81 mm	15.000 mm	18.000 mm	34.00 - 48.00 mm	28.00 - 48.00 mm	75 mm	48.3 mm	53 mm



- Ex d and Ex e cable entry for unarmoured cables and cables with wire-braid armouring
- More safety: sealing of the outer cable sheath, flood seal, designed to prevent cold flow
- Worldwide certification in accordance with IECEx, ATEX and CSA

WebCode **A2FA**

A2F series metal Ex d and Ex e cable entries are designed for unarmoured cables and cables with wire-braid armouring. The flood seal with integral protection and sealing for the outer cable sheath provided by an explosion-protected displacement seal ensure added safety. And because they are designed to prevent cold flow, safety is improved even further. They have worldwide certification according to IECEx, ATEX and CSA.

	IECEx / ATEX					
Zone	0	1	2	20	21	22
Installation in		•	•	•	•	•

Selection Table

Thread standard Material			Metric Nickel-plated brass							
Gland size	Thread size	Inner sheath	Width across flats	Width across corners	Protrusion length	PVC-shroud	Art. No.	Listprice €	PS	Weight kg
20	M20	6.5 … 14 mm	27 mm	29.7 mm	27.2 mm	PVC05	243464▲	10.40	10	0.070
20s	M20	6.1 … 11.7 mm	24 mm	26.4 mm	25.1 mm	PVC04	243463▲	8.40	10	0.060
20s/16	M20	3.2 … 8.7 mm	24 mm	26.4 mm	25.1 mm	PVC04	243462▲	8.40	10	0.070
25	M25	11.1 … 20 mm	36 mm	39.6 mm	35.5 mm	PVC09	107642▲	12.40	10	0.130
32	M32	17 … 26.3 mm	41 mm	45.1 mm	34.2 mm	PVC10	243465▲	25.30	10	0.150
40	M40	23.5 … 32.2 mm	50 mm	55 mm	35.1 mm	PVC13	107730▲	36.30	10	0.200
50	M50	35.6 … 44 mm	55 mm	66 mm	36.3 mm	PVC18	107801▲	52.30	10	0.270
63	M63	47.2 … 55.9 mm	75 mm	82.5 mm	35.8 mm	PVC23	243467▲	111.60	10	0.400
Thread standard Material			Metric Stainless steel							
Gland size	Thread size	Inner sheath	Width across flats	Width across corners	Protrusion length	PVC-shroud	Art. No.	Listprice €	PS	Weight kg
20	M20	6.5 … 14 mm	27 mm	29.7 mm	27.2 mm	PVC05	221749▲	61.40	10	0.070
20s	M20	6.1 … 11.7 mm	24 mm	26.4 mm	25.1 mm	PVC04	168142▲	49.00	10	0.060
20s/16	M20	3.2 … 8.7 mm	24 mm	26.4 mm	25.1 mm	PVC04	107538▲	49.00	10	0.070
25	M25	11.1 … 20 mm	36 mm	39.6 mm	35.5 mm	PVC09	243468▲	77.10	10	0.123
32	M32	17 … 26.3 mm	41 mm	45.1 mm	34.2 mm	PVC10	168145▲	77.50	10	0.150
40	M40	23.5 … 32.2 mm	50 mm	55 mm	35.1 mm	PVC13	168146	140.30	10	0.200
50	M50	35.6 … 44 mm	60 mm	66 mm	36.3 mm	PVC18	168148	294.30	10	0.270

Cable Glands Ex e & Ex d & Ex nR & Ex ta

Series A2F for Unarmoured Cables

Selection Table

Thread standard Material			Metric Stainless steel							
Gland size	Thread size	Inner sheath	Width across flats	Width across corners	Protrusion length	PVC-shroud	Art. No.	Listprice €	PS	Weight kg
63	M63	47.2 … 55.9 mm	75 mm	82.5 mm	35.8 mm	PVC23	243481	508.90	10	0.378

Technical Data

Explosion Protection	
IECEx gas explosion protection	Ex db IIC Gb
IECEx dust explosion protection	Ex ta IIIC Da
IECEx restricted breathing	Ex nR IIC Gc
ATEX gas explosion protection	Ⓔx II 2 G Ex db IIC Gb
ATEX dust explosion protection	Ⓔx II 1 D Ex ta IIIC Da
ATEX restricted breathing	Ⓔx II 3 G Ex nR IIC Gc
EAC gas explosion protection	Ex 1 Ex d e IIC Gb X Ex 2 Ex nR IIC Gc X
EAC dust explosion protection	Ex Ex ta IIIC Da X
Notes	The product certification and certificates can be downloaded from the manufacturer's homepage (www.cmp-products.com)
Ex version	Ex e & Ex d & Ex nR & Ex ta
Ambient Conditions	
Ambient temperature	-60 °C ... +130 °C
Mechanical Data	
Degree of protection (IP)	IP66
Degree of protection note	IP67 and IP68 mounting in accordance with the specifications of the manufacturer, CMP
Sealing material	SOLO LSF
Silicone-free	Yes
Construction type	BS 6121, IEC/EN 62444

Dimensional Drawings (All Dimensions in mm [inches]) – Subject to Alterations

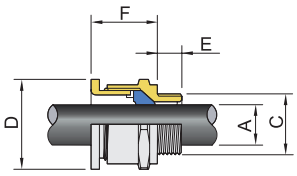

A = Inner sheath C = Thread size
D = Width across corners D = Width across flats
E = Thread length F = Protrusion length



- Ex d and Ex e cable entry for unarmoured cables and cables with wire-braid armouring
- More safety: sealing of the outer cable sheath, flood seal, designed to prevent cold flow
- No strain relief necessary
- Suitable for mobile uses
- Worldwide certification in accordance with IECEx, ATEX and CSA

WebCode **A2F100A**

A2F 100 series metal Ex d and Ex e cable entries are designed for unarmoured cables and cables with wire-braid armouring. The flood seal with integral protection and sealing for the outer cable sheath provided by an explosion-protected displacement seal ensure added safety. And because they are designed to prevent cold flow, safety is improved even further. They have worldwide certification according to IECEx, ATEX and CSA.

	IECEx / ATEX					
Zone	0	1	2	20	21	22
Installation in		•	•	•	•	•

Selection Table

Thread standard: Metric
Material: Nickel-plated brass

Gland size	Thread size	Inner sheath	Width across flats	Width across corners	Protrusion length	PVC-shroud	Art. No.	Listprice €	PS	Weight kg
20	M20	7 … 13.5 mm	27 mm	29.7 mm	35.8 mm	PVC05	263422	11.60	10	0.090
20S	M20	6.5 … 11.2 mm	24 mm	26.4 mm	31.9 mm	PVC04	263421	10.40	10	0.070
20S16	M20	3.2 … 8 mm	24 mm	26.4 mm	30.4 mm	PVC04	263420	11.20	10	0.080
25	M25	11.5 … 19.5 mm	36 mm	39.6 mm	40.4 mm	PVC09	263423	19.50	10	0.160
32	M32	19 … 25.5 mm	41 mm	45.1 mm	38.5 mm	PVC10	263393	23.00	10	0.180
40	M40	25 … 32.2 mm	50 mm	55 mm	38.8 mm	PVC13	263394	42.20	10	0.250
50S	M50	31 … 38.2 mm	55 mm	60.5 mm	41.1 mm	PVC15	263395	57.80	10	0.330
63	M63	48.2 … 54.9 mm	75 mm	82.5 mm	43.6 mm	PVC23	263398	107.80	10	0.550

Technical Data

Explosion Protection	
IECEx gas explosion protection	Ex db IIC Gb
IECEx dust explosion protection	Ex ta IIIC Da
IECEx firedamp protection	Ex db I Mb
IECEx restricted breathing	Ex nRc IIC Gc
ATEX gas explosion protection	Ⓔx II 2 G Ex db IIC Gb
ATEX dust explosion protection	Ⓔx II 1 D Ex ta IIIC Da
ATEX firedamp protection	Ⓔx I M2 Ex db I Mb
ATEX restricted breathing	Ⓔx II 3 G Ex nRc IIC Gc

Cable Glands Ex e & Ex d & Ex nR & Ex ta

Series A2F100 for Unarmoured Cables

Technical Data	
Explosion Protection	
Notes	The product certification and certificates can be downloaded from the manufacturer's homepage (www.cmp-products.com)
Ex version	Ex e & Ex d & Ex nR & Ex ta
Ambient Conditions	
Ambient temperature	-60 °C ... +130 °C
Mechanical Data	
Degree of protection (IP)	IP66
Degree of protection note	IP67 and IP68 mounting in accordance with the specifications of the manufacturer, CMP
Sealing material	SOLO LSF
Silicone-free	No
Construction type	BS 6121, IEC/EN 62444

Dimensional Drawings (All Dimensions in mm [inches]) – Subject to Alterations

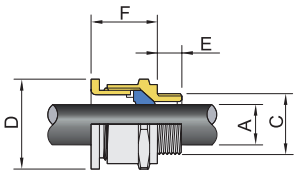

A = Inner sheath C = Thread size
D = Width across corners D = Width across flats
E = Thread length F = Protrusion length

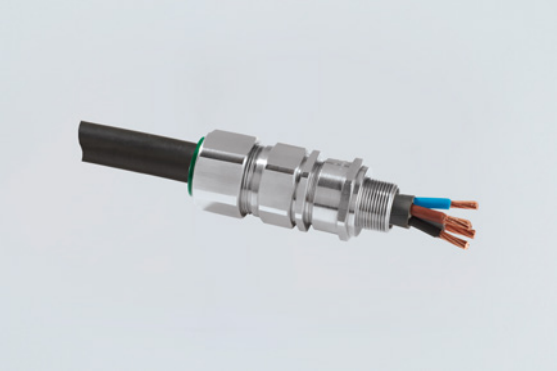

- Ex d and Ex e cable entry for all armoured cables: SWA, braid- and tape-type steel or aluminium armouring
- Explosion-protected displacement seal for the outer cable sheath, controlled outer load retention seal
- Worldwide certification in accordance with IECEx, ATEX and cCSAus, EMC-tested

WebCode **E1FUA**

E1FU series metal Ex d and Ex e cable entries are suitable for all types of armoured cables, i.e. for SWA, braid- and tape-type steel and aluminium armouring. They feature a multi-functional holder for the armouring and various seals. They are also designed to prevent cold flow and are EMC-tested.

	IECEx / ATEX					
Zone	0	1	2	20	21	22
Installation in		•	•	•	•	•

Selection Table

Thread standard: Metric

Gland size	Thread size	Inner sheath	Outer sheath	Width across flats	Protrusion length	Grooved cone	Stepped cone	PVC-shroud	Art. No.	Listprice €	PS	Weight kg
20	M20	6.5 … 13.9 mm	12.5 … 20.9 mm	30.5 mm	73 mm	0.4 … 1 mm	0.8 … 1.25 mm	PVC06	243484▲	37.50	10	0.210
20s	M20	6.1 … 11.6 mm	9.5 … 15.9 mm	24 mm	70 mm	0.3 … 1 mm	0.8 … 1.25 mm	PVC04	243483▲	30.50	10	0.150
20s/16	M20	3.1 … 8.6 mm	6.1 … 13.1 mm	24 mm	72.5 mm	0.3 … 1 mm	0.8 … 1.25 mm	PVC04	243482▲	30.50	10	0.160
25	M25	11.1 … 19.9 mm	18.2 … 26.2 mm	37.5 mm	89 mm	0.4 … 1.2 mm	1.25 … 1.6 mm	PVC09	243486▲	53.20	10	0.330
25s	M25	11.1 … 19.9 mm	14 … 22 mm	37.5 mm	89 mm	0.4 … 1.2 mm	1.25 … 1.6 mm	PVC09	243485▲	53.20	10	0.330
32	M32	17 … 26.2 mm	23.7 … 33.9 mm	46 mm	86 mm	0.4 … 1.2 mm	1.6 … 2 mm	PVC11	243487▲	75.80	10	0.430
40	M40	22 … 32.1 mm	27.9 … 40.4 mm	55 mm	90 mm	0.4 … 1.6 mm	1.6 … 2 mm	PVC15	243488▲	141.30	10	0.620
50	M50	35.6 … 44 mm	40.4 … 53 mm	70.1 mm	95 mm	0.6 … 1.6 mm	2 … 2.5 mm	PVC21	243490	226.40	10	0.950
63	M63	47.2 … 55.9 mm	54.6 … 65.8 mm	80 mm	104 mm	0.6 … 1.6 mm	2 … 2.5 mm	PVC25	243492	378.30	10	1.340

Additional variants available with NPT thread type.

Grooved cone: for cables with braid- or tape-type armouring
Stepped cone: for cables with wire armouring (SWA)

Technical Data

Explosion Protection	
IECEx gas explosion protection	Ex db IIC Gb

Cable Glands Ex e & Ex d & Ex nR & Ex ta

Series E1FU for all Armouring without Lead Sheath

Technical Data	
Explosion Protection	
IECEx dust explosion protection	Ex ta IIIC Da
IECEx firedamp protection	Ex eb I Mb
IECEx restricted breathing	Ex nR IIC Gc
ATEX gas explosion protection	Ⓔx II 2 G Ex db IIC Gb
ATEX dust explosion protection	Ⓔx II 1 D Ex ta IIIC Da
ATEX firedamp protection	Ⓔx I M2 Ex db I Mb
ATEX restricted breathing	Ⓔx II 3 G Ex nR IIC Gc
EAC gas explosion protection	1 Ex d e IIC Gb X 2 Ex nR IIC Gc X
EAC dust explosion protection	Ex ta IIIC Da X
Notes	The product certification and certificates can be downloaded from the manufacturer's homepage (www.cmp-products.com)
Ex version	Ex e & Ex d & Ex nR & Ex ta
Ambient Conditions	
Ambient temperature	-60 °C ... +130 °C
Mechanical Data	
Degree of protection (IP)	IP66
Degree of protection note	IP67 and IP68 mounting in accordance with the specifications of the manufacturer, CMP
Material	Nickel-plated brass
Sealing material	SOLO LSF
Armouring type	All armouring
Construction type	BS 6121, IEC/EN 62444
Silicone-free	Yes
Impact strength	20 J

Dimensional Drawings (All Dimensions in mm [inches]) – Subject to Alterations

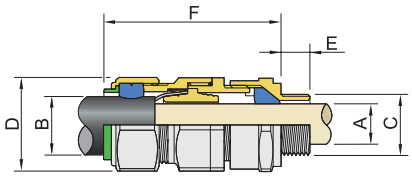

A = Inner sheath B = Outer sheath
C = Thread size D = Width across corners
D = Width across flats E = Thread length
F = Protrusion length



- Ex d and Ex e cable entry for cables with SWA, braid- and tape-type steel and aluminium armouring
- Designed to prevent cold flow
- Compensating displacement seal (CDS), flood seal with integral protection, controlled outer load retention seal
- Worldwide certification in accordance with IECEx, ATEX and cCSAus, EMC-tested

WebCode TE1FUA

TE1FU series metal Ex d and Ex e cable entries are suitable for all types of armoured cables, i.e. for SWA, braid- and tape-type steel and aluminium armouring. They feature a multi-functional holder for the armouring and various seals. They are also designed to prevent cold flow and are EMC-tested. Their auxiliary functions and the sequential, three-stage installation offer increased safety and reduce the amount of time, the costs and the risks involved in installation.

	IECEx / ATEX					
Zone	0	1	2	20	21	22
Installation in		•	•	•	•	•

Selection Table

Thread standard		Metric										
Gland size	Thread size	Inner sheath	Outer sheath	Width across flats	Protrusion length	Grooved cone	Stepped cone	PVC-shroud	Art. No.	Listprice €	PS	Weight kg
20	M20	6.5 … 13.9 mm	12.5 … 20.9 mm	30.5 mm	61.5 mm	0.4 … 1 mm	0.8 … 1.25 mm	PVC06	243495▲	146.70	10	0.230
20s	M20	6.1 … 11.6 mm	9.5 … 15.9 mm	24 mm	57.3 mm	0.3 … 1 mm	0.8 … 1.25 mm	PVC04	243494▲	122.20	10	0.150
20s/16	M20	3.1 … 8.6 mm	6.1 … 13.1 mm	24 mm	57.3 mm	0.3 … 1 mm	0.8 … 1.25 mm	PVC04	243493▲	122.20	10	0.150
25	M25	11.1 … 19.9 mm	18.2 … 26.2 mm	37.5 mm	74 mm	0.4 … 1.2 mm	1.25 … 1.6 mm	PVC09	243497▲	192.40	10	0.340
25s	M25	11.1 … 19.9 mm	14 … 22 mm	37.5 mm	74 mm	0.4 … 1.2 mm	1.25 … 1.6 mm	PVC09	243496▲	126.40	10	0.340
32	M32	17 … 26.2 mm	23.7 … 33.9 mm	46 mm	78.2 mm	0.4 … 1.2 mm	1.6 … 2 mm	PVC11	243498	326.20	10	0.550
40	M40	22 … 32.1 mm	27.9 … 40.4 mm	55 mm	81.6 mm	0.4 … 1.6 mm	1.6 … 2 mm	PVC15	243499	457.00	10	0.790
50	M50	35.6 … 44 mm	40.4 … 53 mm	70.1 mm	91.2 mm	0.6 … 1.6 mm	2 … 2.5 mm	PVC21	243501	965.90	10	1.370
63	M63	47.2 … 55.9 mm	54.6 … 65.8 mm	80 mm	90.3 mm	0.6 … 1.6 mm	2 … 2.5 mm	PVC25	243503	1007.40	10	1.560

Additional variants available with NPT thread type.

Grooved cone: for cables with braid- or tape-type armouring
Stepped cone: for cables with wire armouring (SWA)

Cable Glands Ex e & Ex d & Ex nR & Ex ta

Series TE1FU for all Armouring without Lead Sheath, Stainless Steel

Technical Data	
Explosion Protection	
IECEx gas explosion protection	Ex db IIC Gb
IECEx dust explosion protection	Ex ta IIIC Da
IECEx firedamp protection	Ex db I Mb
IECEx restricted breathing	Ex nR IIC Gc
ATEX gas explosion protection	Ⓔx II 2 G Ex db IIC Gb
ATEX dust explosion protection	Ⓔx II 1 D Ex ta IIIC Da
ATEX firedamp protection	Ⓔx I M2 Ex db I Mb
ATEX restricted breathing	Ⓔx II 3 G Ex nR IIC Gc
EAC gas explosion protection	[Ex] 1 Ex d e IIC Gb X [Ex] 2 Ex nR IIC Gc X
EAC dust explosion protection	[Ex] Ex ta IIIC Da X
Notes	The product certification and certificates can be downloaded from the manufacturer's homepage (www.cmp-products.com)
Ex version	Ex e & Ex d & Ex nR & Ex ta
Ambient Conditions	
Ambient temperature	-60 °C ... +130 °C
Mechanical Data	
Degree of protection (IP)	IP66
Degree of protection note	IP67 and IP68 mounting in accordance with the specifications of the manufacturer, CMP
Material	Stainless steel
Sealing material	SOLO LSF
Armouring type	All armouring
Construction type	BS 6121, IEC/EN 62444
Silicone-free	Yes
Impact strength	20 J

Dimensional Drawings (All Dimensions in mm [inches]) – Subject to Alterations

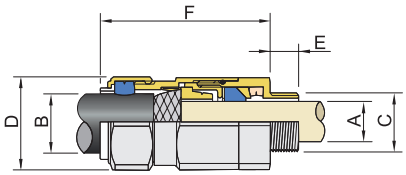

A = Inner sheath B = Outer sheath
C = Thread size D = Width across corners
D = Width across flats E = Thread length
F = Protrusion length



- Cable entry with multi-functional holder for different types of armour
- Compensating displacement seal (CDS), flood seal with integral protection, controlled outer load retention seal
- EMC-tested, worldwide certification in accordance with IECEx, ATEX, TR CU, UL and cCSAus

WebCode T3CDSA

T3CDS series metal Ex d and Ex e cable entries are suitable for all types of armoured cables, i.e. for SWA, braid- and tape-type steel and aluminium armouring. They feature a multi-functional holder for the armouring and various seals. They are also designed to prevent cold flow and are EMC-tested. Their auxiliary functions and the sequential, three-stage installation offer increased safety and reduce the amount of time, the costs and the risks involved in installation.

	IECEx / ATEX					
Zone	0	1	2	20	21	22
Installation in		•	•	•	•	•

Selection Table

Thread standard												
				Metric								
Gland size	Thread size	Inner sheath	Outer sheath	Width across flats	Protrusion length	Grooved cone	Stepped cone	PVC-shroud	Art. No.	Listprice €	PS	Weight kg
20	M20	6.5 … 13.9 mm	12.5 … 20.9 mm	30.5 mm	76.2 mm	0.4 … 1 mm	0.8 … 1.25 mm	PVC06	246561▲	42.50	10	0.280
20s/16	M20	3.1 … 8.6 mm	6.1 … 13.1 mm	24 mm	78.7 mm	0.3 … 1 mm	0.8 … 1.25 mm	PVC36	246560▲	36.30	10	0.200
25	M25	11.1 … 19.9 mm	18.2 … 26.2 mm	37.5 mm	88.7 mm	0.4 … 1.2 mm	1.25 … 1.6 mm	PVC09	246562▲	64.10	10	0.440
25s	M25	11.1 … 19.9 mm	14 … 22 mm	37.5 mm	88.8 mm	0.4 … 1.2 mm	1.25 … 1.6 mm	PVC09	251726	60.10	10	0.440
32	M32	17 … 26.2 mm	23.7 … 33.9 mm	46 mm	90.7 mm	0.4 … 1.2 mm	1.6 … 2 mm	PVC11	246563	89.30	10	0.630
40	M40	22 … 32.1 mm	27.9 … 40.4 mm	55 mm	93.2 mm	0.4 … 1.6 mm	1.6 … 2 mm	PVC15	246564	166.80	10	0.910
50	M50	35.6 … 44 mm	40.4 … 53 mm	70.1 mm	105.8 mm	0.6 … 1.6 mm	2 … 2.5 mm	PVC21	246566	241.20	10	1.600
63	M63	47.2 … 55.9 mm	54.6 … 65.8 mm	80 mm	105.4 mm	0.6 … 1.6 mm	2 … 2.5 mm	PVC25	246568	420.80	10	1.780

Grooved cone: for cables with braid- or tape-type armouring
Stepped cone: for cables with wire armouring (SWA)

Technical Data

Explosion Protection	
IECEx gas explosion protection	Ex db IIC Gb
IECEx dust explosion protection	Ex ta IIIC Da

Cable Glands Ex e & Ex d & Ex nR & Ex ta

Series T3CDS for all Armouring without Lead Sheath

Technical Data	
Explosion Protection	
IECEx firedamp protection	Ex db I Mb
IECEx restricted breathing	Ex nR IIC Gc
ATEX gas explosion protection	Ⓔx II 2 G Ex db IIC Gb
ATEX dust explosion protection	Ⓔx II 1 D Ex ta IIIC Da
ATEX firedamp protection	Ⓔx I M2 Ex db I Mb
ATEX restricted breathing	Ⓔx II 3 G Ex nR IIC Gc
EAC gas explosion protection	1 Ex d e IIC Gb X 2 Ex nR IIC Gc X
EAC dust explosion protection	Ex ta IIIC Da X
Notes	The product certification and certificates can be downloaded from the manufacturer's homepage (www.cmp-products.com)
Ex version	Ex e & Ex d & Ex nR & Ex ta
Ambient Conditions	
Ambient temperature	-60 °C ... +130 °C
Mechanical Data	
Degree of protection (IP)	IP66
Degree of protection note	IP67 and IP68 mounting in accordance with the specifications of the manufacturer, CMP
Material	Nickel-plated brass
Material note	Stainless steel variants also available
Sealing material	SOLO LSF
Construction type	BS 6121, IEC/EN 62444
Silicone-free	Yes
Impact strength	20 J

Dimensional Drawings (All Dimensions in mm [inches]) – Subject to Alterations

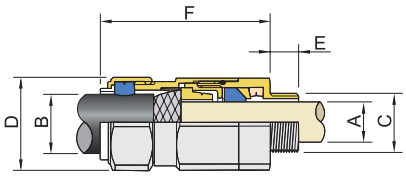

A = Inner sheath B = Outer sheath
C = Thread size D = Width across corners
D = Width across flats E = Thread length
F = Protrusion length



- Greater reliability: Flood seal with integral protection, controlled outer load retention seal and over-rotation protection
- “RapidEx” compound barrier for easy installation and greater reliability
- Worldwide certification in accordance with IECEx, ATEX and cCSAus, EMC-tested

WebCode **PX2KB**

PX2K REX series metal Ex d and Ex e barrier cable entries are suitable for cables with SWA, braid- and tape-type steel and aluminium armouring. They are sealed by means of a liquid compound barrier (“RapidEx”), which reduces the amount of time, the costs and the risks involved in installation and affords increased reliability. They feature a multi-functional holder for the armouring and various seals. They are also EMC-tested.

	IECEx / ATEX					
Zone	0	1	2	20	21	22
Installation in		•	•	•	•	•

Selection Table

Thread standard: Metric

Gland size	Thread size	Inner sheath	Max. number of cores	Outer sheath	Width across flats	Grooved cone	Stepped cone	PVC-shroud	Art. No.	Listprice €	PS	Weight kg
20	M20	12.6 mm	11	12.5 … 20.9 mm	30.5 mm	0.4 … 1 mm	0.8 … 1.25 mm	PVC06	246649	71.00	10	0.240
20s/16	M20	11.7 mm	11	6.1 … 13.1 mm	30.5 mm	0.3 … 1 mm	0.8 … 1.25 mm	PVC06	246648	61.60	10	0.240
25	M25	17.5 mm	21	18.2 … 26.2 mm	37.5 mm	0.4 … 1.2 mm	1.25 … 1.6 mm	PVC09	246650	95.20	10	0.370
32	M32	23.6 mm	38	23.7 … 33.9 mm	46 mm	0.4 … 1.2 mm	1.6 … 2 mm	PVC11	246651	149.80	10	0.570
40	M40	30 mm	59	27.9 … 40.4 mm	55 mm	0.4 … 1.6 mm	1.6 … 2 mm	PVC15	246652	230.60	10	0.800
50	M50	41 mm	89	40.4 … 53 mm	70 mm	0.6 … 1.6 mm	2 … 2.5 mm	PVC21	246654	359.20	10	1.190
63	M63	53.7 mm	115	54.6 … 65.8 mm	80 mm	0.6 … 1.6 mm	2 … 2.5 mm	PVC25	246656	594.00	10	1.410

Additional variants available with NPT thread type.

Grooved cone: for cables with braid- or tape-type armouring
Stepped cone: for cables with wire armouring (SWA)

Technical Data

Explosion Protection	
IECEx gas explosion protection	Ex db IIC Gb
IECEx dust explosion protection	Ex ta IIIC Da
IECEx firedamp protection	Ex db I Mb

Cable Glands Ex e & Ex d & Ex nR & Ex ta

Series PX2K REX for all Armouring without Lead Sheath, RapidEx

Technical Data	
Explosion Protection	
IECEx restricted breathing	Ex nR IIC Gc
ATEX gas explosion protection	Ⓔx II 2 G Ex db IIC Gb
ATEX dust explosion protection	Ⓔx II 1 D Ex ta IIIC Da
ATEX firedamp protection	Ⓔx I M2 Ex db I Mb
ATEX restricted breathing	Ⓔx II 3 G Ex nR IIC Gc
EAC gas explosion protection	1 Ex d e IIC Gb X 2 Ex nR IIC Gc X
EAC dust explosion protection	Ex ta IIIC Da X
Notes	The product certification and certificates can be downloaded from the manufacturer's homepage (www.cmp-products.com)
Ex version	Ex e & Ex d & Ex nR & Ex ta
Ambient Conditions	
Ambient temperature	-60 °C ... +85 °C
Mechanical Data	
Degree of protection (IP)	IP66
Degree of protection note	IP67 and IP68 mounting in accordance with the specifications of the manufacturer, CMP
Material	Nickel-plated brass
Sealing material	SOLO LSF
Armouring type	All armouring
Construction type	BS 6121, IEC/EN 62444
Silicone-free	Yes
Impact strength	20 J

Dimensional Drawings (All Dimensions in mm [inches]) – Subject to Alterations

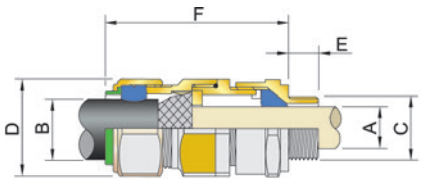

A = Max. inner sheath
G = Inner conduit diameter max. B = Outer sheath
C = Thread size D = Width across corners
D = Width across flats E = Thread length
F = Protrusion length



- “RapidEx” compound barrier for easy installation and greater reliability
- Sealing for the outer cable sheath provided by an explosion-protected displacement seal
- Worldwide certification in accordance with IECEx, ATEX and cCSAus

WebCode **PXSS2KB**

PXSS2K REX series metal Ex d and Ex e barrier cable entries are suitable for unarmoured cables and cables with wire-braid armouring. They are sealed by means of a liquid compound barrier (“RapidEx”), which reduces the amount of time, the costs and the risks involved in installation and affords increased reliability. They feature a displacement seal for the outer cable sheath coupled with a double flood seal with integral protection.

	IECEx / ATEX					
Zone	0	1	2	20	21	22
Installation in		•	•	•	•	•

Selection Table

Thread standard			Metric							
Gland size	Thread size	Inner sheath	Max. number of cores	Outer sheath	Width across flats	PVC-shroud	Art. No.	Listprice €	PS	Weight kg
20	M20	12.6 mm	11	6.5 … 14 mm	30 mm	PVC06	246605	59.50	10	0.200
20s/16	M20	8.6 mm	11	3.1 … 8.6 mm	30 mm	PVC06	246604	50.70	10	0.200
25	M25	17.5 mm	21	11.1 … 20 mm	36 mm	PVC09	246606	76.90	10	0.330
32	M32	23.6 mm	38	17 … 26.3 mm	41 mm	PVC10	246607	122.20	10	0.590
40	M40	30 mm	59	22 … 32.1 mm	50 mm	PVC13	246608	193.40	10	0.560
50	M50	41 mm	89	35.6 … 44 mm	60 mm	PVC18	246610	286.90	10	0.730
63	M63	53.7 mm	115	47.2 … 55.9 mm	75 mm	PVC23	246612	487.70	10	1.060

Additional variants available with NPT thread type.

Technical Data

Explosion Protection	
IECEx gas explosion protection	Ex db IIC Gb
IECEx dust explosion protection	Ex ta IIIC Da
IECEx firedamp protection	Ex db I Mb
IECEx restricted breathing	Ex nR IIC Gc
ATEX gas explosion protection	Ⓔx II 2 G Ex db IIC Gb
ATEX dust explosion protection	Ⓔx II 1 D Ex ta IIIC Da
ATEX firedamp protection	Ⓔx I M2 Ex db I Mb
ATEX restricted breathing	Ⓔx II 3 G Ex nR IIC Gc

Cable Glands Ex e & Ex d & Ex nR & Ex ta

Series PXSS2K REX for Unarmoured Cable, RapidEx

Technical Data	
Explosion Protection	
EAC gas explosion protection	1 Ex d e IIC Gb X 2 Ex nR IIC Gc X
EAC dust explosion protection	Ex ta IIIC Da X
Notes	The product certification and certificates can be downloaded from the manufacturer's homepage (www.cmp-products.com)
Ex version	Ex e & Ex d & Ex nR & Ex ta
Ambient Conditions	
Ambient temperature	-60 °C ... +85 °C
Mechanical Data	
Degree of protection (IP)	IP66
Degree of protection note	IP67 and IP68 mounting in accordance with the specifications of the manufacturer, CMP
Material	Nickel-plated brass
Sealing material	SOLO LSF
Armouring type	Unarmoured cable types
Construction type	BS 6121, IEC/EN 62444
Silicone-free	Yes
Impact strength	20 J

Dimensional Drawings (All Dimensions in mm [inches]) – Subject to Alterations

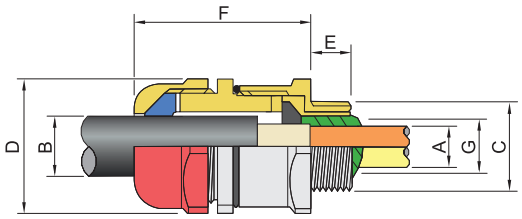

A = Max. inner sheath
G = Inner conduit diameter max. B = Outer sheath
C = Thread size D = Width across corners
D = Width across flats E = Thread length
F = Protrusion length



- Ex e reducers made from glass fibre-reinforced polyamide
- Large selection of metric thread sizes

WebCode ACC1L

The metal Ex-d reducers enable the simple adaptation of thread sizes. There is a wide selection of different versions available. They have worldwide certification according to IECEx, ATEX und EAC/TR CU.

	IECEx / ATEX					
Zone	0	1	2	20	21	22
Installation in		•	•		•	•

Selection Table

Version		Metric / metric							
External thread	Internal thread	Thread length	Width across flats	Width across corners	Design	Art. No.	Listprice €	PS	Weight kg
M20	M16	9 mm	24 mm	28 mm	A	109385▲	6.70	18	0.009
M25	M20	10 mm	29 mm	33 mm	B	109384▲	6.70	18	0.007
M32	M20	12 mm	36 mm	41 mm	B	109383▲	9.70	18	0.014
	M25	12 mm	36 mm	41 mm	B	109382▲	9.70	18	0.011
M40	M20	12 mm	46 mm	51 mm	B	109381	9.70	18	0.021
	M25	12 mm	46 mm	51 mm	B	109380▲	9.70	18	0.023
	M32	12 mm	46 mm	51 mm	B	109379▲	9.70	18	0.019
M50	M25	14 mm	55 mm	61 mm	B	109377	15.30	18	0.001
	M32	14 mm	55 mm	61 mm	B	109376	15.30	18	0.035
	M40	14 mm	55 mm	61 mm	B	109375▲	15.30	18	0.024
	M20	14 mm	55 mm	61 mm	B	109378	15.30	18	0.001
M63	M20	15 mm	68 mm	75 mm	B	109374	20.40	18	0.001
	M25	15 mm	68 mm	75 mm	B	109373	20.40	18	0.001
	M40	15 mm	68 mm	75 mm	B	109371	20.40	18	0.046
	M50	15 mm	68 mm	75 mm	B	109370▲	20.40	18	0.039
	M32	15 mm	68 mm	75 mm	B	109372	20.40	18	0.046

Technical Data

Explosion Protection	
IECEx gas explosion protection	Ex e II
IECEx dust explosion protection	Ex tD A21

▲ Preferred products – in stock or available at short notice

Reducers made of Moulded Material

Technical Data	
Explosion Protection	
ATEX gas explosion protection	Ⓔx II 2 G Ex e II
ATEX dust explosion protection	Ⓔx II 2 D Ex tD A21
EAC gas explosion protection	Ex e II X
EAC dust explosion protection	Ex tD A21
Ambient Conditions	
Ambient temperature	-20 °C ... +70 °C
Mechanical Data	
Degree of protection (IP)	IP66
Material	Polyamide, Glass fibre reinforced
Silicone-free	Yes
Colour	Black

Dimensional Drawings (All Dimensions in mm [inches]) – Subject to Alterations

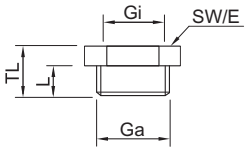

Design B
Ga = External thread Gi = Internal thread
L = Thread length SW = Width across flats
E = Width across corners TL = Length

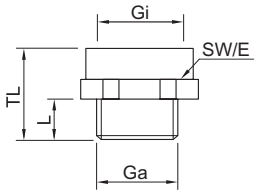

Design A
Ga = External thread Gi = Internal thread
L = Thread length SW = Width across flats
E = Width across corners TL = Length



- Ex d and Ex e metal reducers
- Large selection of thread types and sizes
- Operating temperature range: -60 C° … +200 °C
- Worldwide certification, IECEx, ATEX, UL and cCSAus

WebCode 737DA

The metal Ex-d reducers from the 737 series enable adaptation of the thread sizes and types. There is a wide selection of different versions available. They have worldwide certification according to IECEx, ATEX, UL and cCSAus.

	IECEx / ATEX					
Zone	0	1	2	20	21	22
Installation in		•	•	•	•	•

Selection Table

Material		Nickel-plated brass					
External thread	Internal thread	Width across flats	Width across corners	Art. No.	Listprice €	PS	Weight kg
M20	M16	24 mm	26.4 mm	253003▲	7.60	18	0.053
M25	M20	30 mm	33 mm	253004▲	6.90	18	0.100
M32	M20	37.6 mm	41.4 mm	253005▲	10.50	18	0.098
	M25	37.6 mm	41.4 mm	253006▲	10.50	18	0.100
M40	M20	46 mm	50.6 mm	253007	22.70	18	1.000
	M25	46 mm	50.6 mm	253008	21.50	18	0.200
	M32	46 mm	50.6 mm	252970▲	21.50	18	0.265
M50	M32	55 mm	60.5 mm	252971	31.90	18	0.175
	M40	55 mm	60.5 mm	252972	31.90	18	0.176
M63	M40	70 mm	77 mm	252974	51.60	18	0.250
	M50	70 mm	77 mm	252975	51.60	18	0.130
M75	M63	84 mm	92.4 mm	252977	85.40	18	0.203
Material		Stainless steel					
External thread	Internal thread	Width across flats	Width across corners	Art. No.	Listprice €	PS	Weight kg
M20	M16	24 mm	26.4 mm	252979	59.20	18	1.900
M25	M20	30 mm	33 mm	252980▲	68.30	18	0.075
M32	M25	37.6 mm	41.4 mm	252981	72.50	18	0.100
M40	M32	46 mm	50.6 mm	252982	108.40	18	0.120

▲ Preferred products – in stock or available at short notice

Reducers made of Metal
Series CMP-737D

Selection Table

Material		Stainless steel					
External thread	Internal thread	Width across flats	Width across corners	Art. No.	Listprice €	PS	Weight kg
M50	M32	55 mm	60.5 mm	252983	125.40	18	0.120
	M40	55 mm	60.5 mm	252984	147.70	18	0.100

Technical Data

Explosion Protection	
IECEx gas explosion protection	Ex e IIC Gb
ATEX gas explosion protection	Ⓔx II 2 G Ex e IIC Gb
EAC gas explosion protection	Ex 1 Ex d e IIC Gb X
EAC dust explosion protection	Ex Ex ta IIIC Da X
Notes	The product certification and certificates can be downloaded from the manufacturer's homepage (www.cmp-products.com)
Ambient Conditions	
Ambient temperature	-60 °C ... +200 °C
Mechanical Data	
Degree of protection (IP)	IP66
Degree of protection note	IP67 and IP68 mounting in accordance with the specifications of the manufacturer, CMP
Silicone-free	Yes

Dimensional Drawings (All Dimensions in mm [inches]) – Subject to Alterations

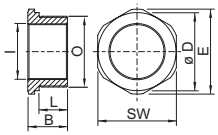

O = External thread I = Internal thread
SW = Width across flats E = Width across corners
B = Length L = Thread length

E10



- Metal Ex-d- and Ex-e adaptors
- Large selection of thread types and sizes
- Operating temperature range: -60 °C … +200 °C
- Worldwide certification, IECEx, ATEX, UL and cCSAus

WebCode 737DB

The metal Ex-d adaptors and reducers from the 737 series enable adaptation of the thread sizes and types. There is a wide selection of different versions available. They have worldwide certification according to IECEx, ATEX, UL and cCSAus.

	IECEx / ATEX					
Zone	0	1	2	20	21	22
Installation in		•	•	•	•	•

Selection Table							
Material		Nickel-plated brass					
External thread	Internal thread	Width across flats	Width across corners	Art. No.	Listprice €	PS	Weight kg
M16	M20	24 mm	26.4 mm	252965▲	8.10	18	0.050
M20	M25	30 mm	33 mm	252966▲	10.70	18	0.075
M25	M32	37.6 mm	41.4 mm	252967	18.20	18	0.075
M32	M40	46 mm	50.6 mm	252968	27.50	18	0.100
M40	M50	60 mm	66 mm	252969	36.10	18	0.200
Material		Stainless steel					
External thread	Internal thread	Width across flats	Width across corners	Art. No.	Listprice €	PS	Weight kg
M20	M25	30 mm	33 mm	252996	78.40	18	1.000

Technical Data	
Explosion Protection	
IECEx gas explosion protection	Ex d IIC Gb
ATEX gas explosion protection	Ⓔx II 2 G Ex d IIC Gb
EAC gas explosion protection	Ex 1 Ex d e IIC Gb X
EAC dust explosion protection	Ex Ex ta IIIC Da X
Notes	The product certification and certificates can be downloaded from the manufacturer's homepage (www.cmp-products.com)
Ambient Conditions	
Ambient temperature	-60 °C ... +200 °C
Mechanical Data	
Degree of protection (IP)	IP66

▲ Preferred products – in stock or available at short notice

Adaptors made of Metal
Series CMP-737D

Technical Data	
Mechanical Data	
Degree of protection note	IP67 and IP68 mounting in accordance with the specifications of the manufacturer, CMP
Silicone-free	Yes

Dimensional Drawings (All Dimensions in mm [inches]) – Subject to Alterations

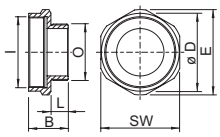

O = External thread I = Internal thread
SW = Width across flats E = Width across corners
B = Length L = Thread length



- Ex e enlargements made from glass fibre-reinforced polyamide
- Large selection of metric thread sizes

WebCode ACC1A

The glass fibre-reinforced Ex e enlargements enable the simple adaptation of thread sizes. There is a wide selection of different versions available. They have worldwide certification according to IECEx, ATEX und EAC/TR CU.

	IECEx / ATEX					
Zone	0	1	2	20	21	22
Installation in		•	•		•	•

Selection Table

Version		Metric / metric						
External thread	Internal thread	Thread length	Width across flats	Width across corners	Art. No.	Listprice €	PS	Weight kg
M16	M20	9 mm	24 mm	28 mm	109391▲	6.70	18	0.007
M20	M25	9 mm	29 mm	33 mm	109390▲	6.70	18	0.008
M25	M32	10 mm	36 mm	41 mm	109389▲	9.70	18	0.011
M32	M40	12 mm	46 mm	51 mm	109388▲	9.70	18	0.018
M40	M50	12 mm	55 mm	61 mm	109387▲	9.70	18	0.026
M50	M63	14 mm	68 mm	75 mm	109386	15.30	18	0.008

Technical Data

Explosion Protection	
IECEx gas explosion protection	Ex e II
IECEx dust explosion protection	Ex tD A21
ATEX gas explosion protection	II 2 G Ex e II
ATEX dust explosion protection	II 2 D Ex tD A21
EAC gas explosion protection	Ex e II X
EAC dust explosion protection	Ex tD A21
Ambient Conditions	
Ambient temperature	-20 °C ... +70 °C
Mechanical Data	
Degree of protection (IP)	IP66
Material	Polyamide, Glass fibre reinforced
Silicone-free	Yes

Enlargements made of Moulded Material

Technical Data

Mechanical Data	
Colour	Black

Dimensional Drawings (All Dimensions in mm [inches]) – Subject to Alterations

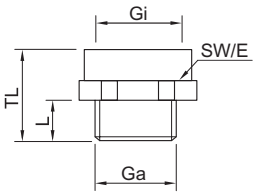

Ga = External thread Gi = Internal thread
L = Thread length SW = Width across flats
E = Width across corners TL = Length

E10



- Plastic stopping plugs for sealing open holes
- For thread sizes M16 to M63
- For Ex e enclosures

WebCode 8290A

R. STAHL's 8290 series plastic stopping plugs can be used to seal unused holes in Ex e enclosures (“increased safety” type of protection). To ensure that they remain robust during use, they are designed to be impact resistant in accordance with IEC/EN 60079-0 and IEC/EN 60079-7 and are protected against working loose.

	IECEx / ATEX					
Zone	0	1	2	20	21	22
Installation in		•	•		•	•

Selection Table

Drive				Hexagon socket					
Thread size	Thread length	Width across flats	Width across corners	Width across flats hexagon socket	Packaging unit	Art. No.	Listprice €	PS	Weight kg
M16	11 mm	20 mm	22 mm	8 mm	100	285775	2.85	10	0.400
M20	11 mm	24 mm	26 mm	10 mm	100	285773	2.45	10	0.500
M25	10.5 mm	29 mm	31 mm	10 mm	100	285774	2.45	10	0.700
M32	11.2 mm	36 mm	38 mm	10 mm	50	285779	3.60	10	0.600
M40	14 mm	46 mm	53 mm	10 mm	30	285776	7.50	10	0.480
M50	14 mm	55 mm	61 mm	10 mm	30	285777	8.00	10	0.780
M63	14 mm	68 mm	75 mm	10 mm	30	285778	9.00	10	1.680

Technical Data

Explosion Protection	
IECEx gas explosion protection	Ex eb IIC Gb
IECEx dust explosion protection	Ex tb IIIC Db
ATEX gas explosion protection	II 2 G Ex eb IIC Gb
ATEX dust explosion protection	II 2 D Ex tb IIIC Db
EAC gas explosion protection	1 Ex e II Gb U
EAC dust explosion protection	Ex tb IIIC Db U
Certificates	ATEX (PTB), Brazil (ULB), EAC (LPE), IECEx (PTB), Korea (KGS)
Ambient Conditions	
Ambient temperature	-60 °C ... +80 °C

Stopping Plugs made of Moulded Material
Series 8290

Technical Data	
Mechanical Data	
Degree of protection (IP)	IP66
Degree of protection note	acc. to IEC/EN 60529
Silicone-free	Yes
Self-extinguishing	Yes
Flame retardant	Yes
Material	Polyamide, Glass fibre reinforced
Material sealing ring	EPDM

Dimensional Drawings (All Dimensions in mm [inches]) – Subject to Alterations

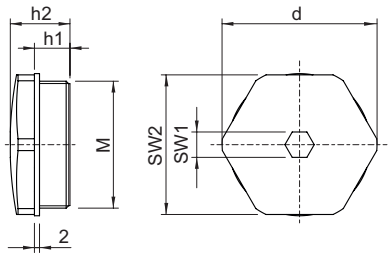

M = Thread size d = Width across corners
h1 = Thread length h2 = Dimension h2
SW1 = Width across flats hexagon socket
SW2 = Width across flats



- Ex d und Ex e metal stopping plugs
- Large selection of thread types and sizes
- Operating temperature range: -60 C° … +200 °C
- Worldwide certification, IECEx, ATEX, UL and cCSAus

WebCode 757DA

The metal Ex-d stopping plugs from the 757 series with external hexagon and head enable temporary or long-term plugging of unused drilled holes. There is a wide selection of different thread sizes and types available. They have worldwide certification according to IECEx, ATEX, UL and cCSAus.

	IECEx / ATEX					
Zone	0	1	2	20	21	22
Installation in		•	•	•	•	•

Selection Table

Material		Nickel-plated brass						
Thread size	Outer diameter	Thread length	Width across flats	Width across corners	Art. No.	Listprice €	PS	Weight kg
M16	24.2 mm	15 mm	22 mm	24.2 mm	253024▲	5.50	18	0.015
M20	26.4 mm	15 mm	24 mm	26.4 mm	253025▲	5.50	18	0.060
M25	33 mm	15 mm	30 mm	33 mm	253026▲	7.00	18	0.120
M32	39.6 mm	15 mm	36 mm	39.6 mm	253027▲	8.60	18	0.192
M40	50.6 mm	15 mm	46 mm	50.6 mm	253028▲	13.50	18	0.170
M50	60.5 mm	15 mm	55 mm	60.5 mm	253029▲	23.20	18	0.265
M63	77 mm	15 mm	70 mm	77 mm	253030	48.60	18	0.280
M75	88 mm	15 mm	80 mm	88 mm	253031▲	77.00	18	0.300
Material		Stainless steel						
Thread size	Outer diameter	Thread length	Width across flats	Width across corners	Art. No.	Listprice €	PS	Weight kg
M16	24.2 mm	15 mm	22 mm	24.2 mm	253033	17.70	18	0.050
M20	26.4 mm	15 mm	24 mm	26.4 mm	251101▲	27.50	18	0.079
M25	33 mm	15 mm	30 mm	33 mm	251102▲	39.30	18	0.075
M32	39.6 mm	15 mm	36 mm	39.6 mm	251103▲	68.80	18	0.100
M40	50.6 mm	15 mm	46 mm	50.6 mm	253034▲	83.50	18	0.110
M50	60.5 mm	15 mm	55 mm	60.5 mm	253035	122.20	18	0.175
M63	77 mm	15 mm	70 mm	77 mm	253036	168.90	18	0.250
M75	88 mm	15 mm	80 mm	88 mm	253037	217.90	18	0.300

Stopping Plugs with a Hexagon Head made of Metal

Series CMP-757

Technical Data	
Explosion Protection	
IECEx gas explosion protection	Ex db IIC Gb
ATEX gas explosion protection	II 2 G Ex db IIC Gb
EAC gas explosion protection	1 Ex d e IIC Gb X
EAC dust explosion protection	Ex ta IIIC Da X
Notes	The product certification and certificates can be downloaded from the manufacturer's homepage (www.cmp-products.com)
Ambient Conditions	
Ambient temperature	-60 °C ... +200 °C
Mechanical Data	
Degree of protection (IP)	IP66
Degree of protection note	IP67 and IP68 mounting in accordance with the specifications of the manufacturer, CMP
Drive	External hexagon
Silicone-free	Yes

Dimensional Drawings (All Dimensions in mm [inches]) – Subject to Alterations

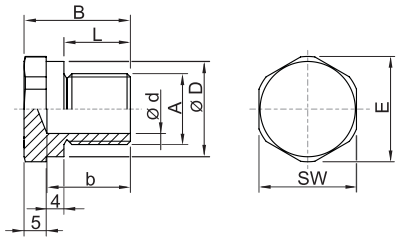

A = Thread size B = Length L = Thread length
D = Outer diameter b = Dimension b
d = Dimension d E = Width across corners
SW = Width across flats hexagon socket

E10



- Ex-d und Ex-e metal stopping plugs
- Large selection of metric thread sizes
- Operating temperature range: -60 °C … +200 °C
- Worldwide certification, IECEx, ATEX, UL and cCSAus

WebCode 767DA

The metallic Ex-d stopping plugs from the 767 series with a truss head and hexagon socket enable temporary or continuous plugging of unused drilled holes. There is a large selection of different metric thread sizes and types available. They have worldwide certification according to IECEx, ATEX, UL and cCSAus.

	IECEx / ATEX					
Zone	0	1	2	20	21	22
Installation in		•	•	•	•	•

Selection Table

Material	Nickel-plated brass					
Thread size	Outer diameter	Thread length	Art. No.	Listprice €	PS	Weight kg
M20	27 mm	15 mm	253039▲	5.00	18	0.075
M25	30 mm	15 mm	253040▲	6.20	18	0.090
M32	36 mm	15 mm	253041	10.40	18	0.110
M40	46 mm	15 mm	253042	13.50	18	0.200
M50	55 mm	15 mm	253043	20.80	18	0.360
M63	68 mm	15 mm	253044	67.80	18	0.500
M75	80 mm	15 mm	253045	112.70	18	0.700

Technical Data

Explosion Protection	
IECEx gas explosion protection	Ex db IIC Gb
IECEx firedamp protection	Ex db I Mb
ATEX gas explosion protection	Ⓔx II 2 G Ex db IIC Gb
ATEX firedamp protection	Ⓔx I M2 Ex db I Mb
EAC gas explosion protection	Ex 1 Ex d e IIC Gb X
EAC dust explosion protection	Ex Ex ta IIIC Da X
Notes	The product certification and certificates can be downloaded from the manufacturer's homepage (www.cmp-products.com)
Ambient Conditions	
Ambient temperature	-60 °C ... +200 °C

Stopping Plugs with a Truss Head made of Metal
Series CMP-767

Technical Data	
Mechanical Data	
Degree of protection (IP)	IP66
Degree of protection note	IP67 and IP68 mounting in accordance with the specifications of the manufacturer, CMP
Drive	Hexagon socket
Silicone-free	Yes

Dimensional Drawings (All Dimensions in mm [inches]) – Subject to Alterations

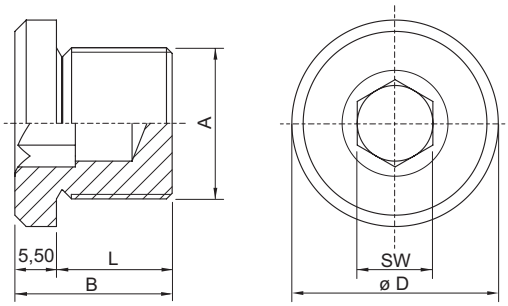

A = Thread size B = Length L = Thread length
D = Outer diameter SW = Width across flats

E10



- Improves safety by preventing condensation from building up in enclosures
- Continuous pressure equalisation between the enclosure and the environment
- Type of protection Ex e (increased safety), max. degree of protection IP65

WebCode **8162A**

R. STAHL's 8162 series breathers provide continuous pressure equalisation between the inside of the enclosure and the atmosphere around the enclosure. This ventilation prevents moisture from entering the enclosure via the seals and condensing inside the enclosure. The breathers are made from moulded material and meet the requirements of degrees of protection up to IP65.

	IECEx / ATEX					
Zone	0	1	2	20	21	22
Installation in		•	•		•	•

	NEC 500 CEC Appendix J					
	Class I		Class II		Class III	
Division	1	2	1	2	1	2
Installation in		•				

Selection Table

Material						
Polyamide, Glass fibre reinforced						
Nuts present	Thread size	Packaging unit	Art. No.	Listprice €	PS	Weight kg
Yes	M25	20	285801	2.40	10	0.400

Technical Data

Explosion Protection	
IECEx gas explosion protection	Ex eb II Gb
IECEx dust explosion protection	Ex tb IIIC Db
ATEX gas explosion protection	II 2 G Ex eb II Gb
ATEX dust explosion protection	II 2 D Ex tb IIIC Db
EAC gas explosion protection	1 Ex e II Gb U
EAC dust explosion protection	Ex tb IIIC Db U
Certificates	ATEX (PTB), EAC (LPE), IECEx (PTB), USA (FM)
Ambient Conditions	
Ambient temperature	-40 °C ... +70 °C
Mechanical Data	
Degree of protection (IP)	IP65
Degree of protection note	when installed in enclosure side: IP64 for lateral mounting IP65 for vertical mounting downwards
Material	Polyamide, Glass fibre reinforced
Silicone-free	Yes
Mounting instruction	only permitted in enclosures with through hole

Breather made of Moulded Material

Series 8162/1

Dimensional Drawings (All Dimensions in mm [inches]) – Subject to Alterations

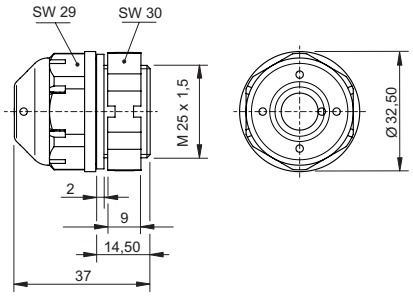



- Metal Ex e breathers
- Degree of protection: IP66, IP67, IP68
- Operating temperature range: -60 °C … +130 °C
- Worldwide certification, IECEx, ATEX und cCSAus

WebCode **781A**

In conditions where there are temperature fluctuations and moisture, the metallic Ex e breathers from the 781 series protect electrical wiring from the effects of condensation inside the enclosure. They provide continuous pressure equalisation between the inside of the enclosure and the atmosphere around the enclosure. There are two metric and two NPT thread versions available for this purpose. An integrated connection thread seal and a special fixture nut are included in the standard version. They have worldwide certification according to IECEx, ATEX and cCSAus.

	IECEx / ATEX					
Zone	0	1	2	20	21	22
Installation in		•	•		•	•

Selection Table					
Material	Nickel-plated brass				
Nuts present	Thread size	Art. No.	Listprice €	PS	Weight kg
Yes	M20	206294 ▲	43.30	10	0.080
	M25	244393 ▲	54.70	10	0.120
Material	Stainless steel				
Nuts present	Thread size	Art. No.	Listprice €	PS	Weight kg
Yes	M20	205689 ▲	78.30	10	0.080
	M25	244392 ▲	115.80	10	0.130

Technical Data	
Explosion Protection	
IECEx gas explosion protection	Ex eb IIC Gb
IECEx dust explosion protection	Ex ta IIIC Da
ATEX gas explosion protection	Ⓔx II 2 G Ex eb IIC Gb
ATEX dust explosion protection	Ⓔx II 1 D Ex ta IIIC Da
EAC gas explosion protection	1 Ex e IIC Gb U
EAC dust explosion protection	Ex ta IIIC Da U
Notes	The product certification and certificates can be downloaded from the manufacturer's homepage (www.cmp-products.com)

Breather made of Metal
Series CMP-781

Technical Data	
Ambient Conditions	
Ambient temperature	-60 °C ... +130 °C
Mechanical Data	
Degree of protection (IP)	IP66
Degree of protection note	IP67 and IP68 mounting in accordance with the specifications of the manufacturer, CMP
Silicone-free	No

Selection Table

Construction type WebCode Material incl. surface treatment		Hexagon nut ACC1B Nickel-plated brass					
Thread size	Width across flats	Height	Lot size	Art. No.	Listprice €	PS	Weight kg
M12	15 mm	3 mm	100	241518▲	0.30	18	0.220
M16	19 mm	3 mm	100	241519▲	0.50	18	0.290
M20	24 mm	3 mm	100	241520▲	0.60	18	0.480
M25	29 mm	3.5 mm	100	241561▲	0.70	18	0.720
M32	36 mm	4 mm	50	241562▲	0.90	18	0.545
M40	46 mm	4.5 mm	50	241563▲	1.30	18	1.030
M50	55 mm	5 mm	25	241564▲	1.50	18	0.680
M63	70 mm	5.5 mm	10	241565	3.10	18	0.499
Construction type WebCode Material incl. surface treatment		Hexagon nut ACC1B Polyamide					
Thread size	Width across flats	Height	Lot size	Art. No.	Listprice €	PS	Weight kg
M12	A/F 18	5 mm	100	239460▲	0.20	19	0.001
M16	A/F 22	5 mm	100	239461▲	0.20	19	0.002
M20	A/F 27	5 mm	100	239462▲	0.30	19	0.002
M25	A/F 32	6 mm	100	239463▲	0.30	19	0.003
M40	A/F 50	7 mm	50	239465▲	1.40	19	0.007
M50	A/F 60	7 mm	25	239466	2.40	19	0.012
M63	A/F 75	7 mm	10	239467	3.20	19	0.018

Dimensional Drawings (All Dimensions in mm [inches]) – Subject to Alterations

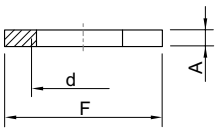

F = Width across flats d = Thread size A = Height

Serrated Lock Washer

Accessories and Mounting Material for Cable Glands

Selection Table

Product Description	Serrated Lock Washer
WebCode	WASHA
Version	With internal teeth
Material incl. surface treatment	Stainless steel

Usage	Outer diameter	Thickness	Art. No.	Listprice €	PS	Weight kg
M16	25.5 mm	3.9 mm	255110▲	1.40	18	0.010
M20	32.5 mm	3.9 mm	255161▲	1.40	18	0.015
M25	40 mm	3.9 mm	255162▲	2.90	18	0.020
M32	43.5 mm	3.9 mm	255163▲	5.70	18	0.025
M40	64.5 mm	3.9 mm	255164▲	13.80	18	0.040

Dimensional Drawings (All Dimensions in mm [inches]) – Subject to Alterations

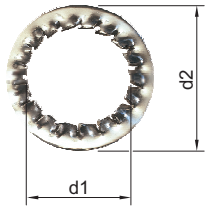

d1 = Usage d2 = Outer diameter

E10

Selection Table

Product Description: Seal for cable entry
WebCode: SEALA
Material: Polyamide

Connection thread	Colour	Inner diameter	Outer diameter	Thickness	Art. No.	Listprice €	PS	Weight kg
M16	White	16.1 mm	25.4 mm	2 mm	167668▲	0.20	18	0.001
M20	White	20.1 mm	28 mm	2 mm	111778▲	0.20	18	0.001
M25	White	25.2 mm	34.4 mm	2 mm	111779▲	0.50	18	0.001
M32	White	32.2 mm	44.1 mm	2 mm	111780▲	0.80	18	0.001
M40	White	40.5 mm	50.5 mm	2 mm	167671▲	1.30	18	0.001
M50	White	50.5 mm	63.4 mm	2 mm	167672▲	1.40	18	0.001
M63	White	63.5 mm	76.5 mm	2 mm	167673▲	1.40	18	0.001

Dimensional Drawings (All Dimensions in mm [inches]) – Subject to Alterations

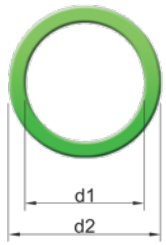

d1 = Inner diameter d2 = Outer diameter

Ingress Disk

Accessories and Mounting Material for Cable Glands
for closing unused CMP Cable Glands

Selection Table

Product Description	CMP sealing disc for cable entry
WebCode	SEALB
Material	Nickel-plated brass
Thickness	0.5 mm

Product Type	Usage	Diameter	Art. No.	Listprice €	PS	Weight kg
ID01	A** - 20s A** - 20s16 SS2K / PXSS2K - 20s SS2K / PXSS2K - 20s16	17.3 mm	253055 ▲	0.50	18	0.005
ID02	E** / C** / PX** - 20s E** / C** / PX** - 20s16 SS2K / PXSS2K - 20 T3CDS / TE1FU - 20s T3CDS / TE1FU - 20s16	20.1 mm	253056 ▲	0.60	18	0.006
ID04	E** / C** / PX** - 20 SS2K / PXSS2K - 25 T3CDS / TE1FU - 20	26.6 mm	253058 ▲	0.60	18	0.010
ID05	A** - 25	29.4 mm	253059 ▲	0.80	18	0.012

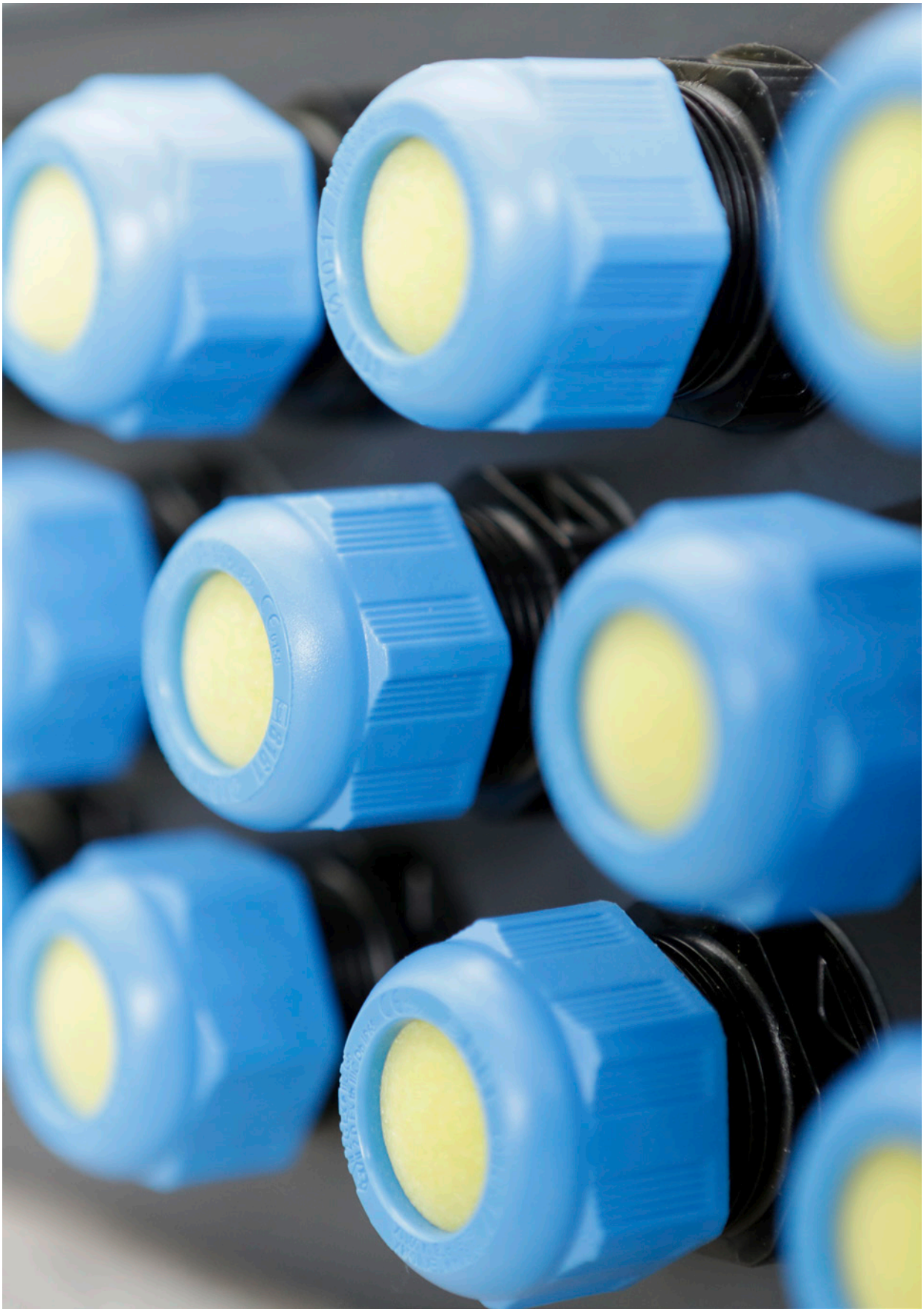

CONTENT
TYPE INDEX

Type	Type Description	Page
57xx		
573 Ex	Cable Reel SolConeX	333
60xx		
6001	Linear Luminaire for Fluorescent Lamps EXLUX	217
6002/4	Linear Luminaire with LED EXLUX	205
6036	Tubular Light Fitting with LED	231
6050/6	Universal Spotlight LED	238
61xx		
6102	C-LUX Compact Light Fittings	227
64xx		
6401	Linear Luminaire for Fluorescent Lamps EXLUX	222
6402/4	Linear Luminaire with LED EXLUX	211
71xx		
7145	Standard Enclosure Zone 2 for Remote I/O	133
80xx		
8003	Control Buttons / Switches for Panel Mounting	359
8003	Control Buttons / Switches for Panel Mounting	364
8013	LED Indicating Lamps for Panel Mounting	369
8018	LED Illuminated Pushbutton	371
8040	Control Device System	374
8040/11-V30	Installation Switch	248
8060	Position Switch	345
8070	Position Switch	351
8074	Metal Position Switch	337
81xx		
8102	Junction Boxes	250
8118	Junction Boxes	253
8118	Terminal Boxes	256
8146	Grounding Monitoring Device	170
8146/1	Terminal Boxes Ex e	261
8146/2	Terminal Boxes Ex i	265
8146/5	Safety Temperature Monitor and Limiter	383
8146/5-V27	Motor Protection Circuit Breaker	399
8146/5-V37	Safety Switches made of Polyester Resin	387
8150	Grounding Monitoring Device	173
8150	Standard Enclosure Zone 1 for Remote I/O	130
8150/1	Terminal Boxes Ex e	268
8150/2	Terminal Boxes Ex i	272
8150/5-V37	Safety Switches made of Stainless Steel	394
8161/7, 8161/8	Cable Glands	410
8162/1	Breather made of Moulded Material	445
8186	Optical Fibre Splice Cassette	153
8187	Ethernet Terminal	155
82xx		
8250	Empty Enclosures	281
8252/1	Terminal Boxes	276
8265	Light-Metal Ex d Enclosures	403
8265	Motion Sensor	381
8290	Stopping Plugs made of Moulded Material	439
84xx		
8485	Grounding Monitoring Device	176

Type	Type Description	Page
85xx		
8537	Safety Switches	397
8570/11	Wall-Mounting Sockets	284
8570/12	Plugs	288
8570/16	Coupler Sockets	291
8570/51	Maintenance Socket	326
8571/11	Wall-Mounting Sockets	312
8571/12	Plugs	316
8571/16	Coupler Sockets	294
8571/51	Maintenance Socket	329
8572/13	Wall-Mounting Socket, Compact	297
8572/14	Coupler	300
8573/12	Plugs, Extra-Low Voltage	306
8573/13	Wall-Mounting Sockets, Compact, Extra-Low Voltage	303
8573/14	Coupler, Extra-Low Voltage	309
8579/12	Plugs	323
8579/31	Wall-Mounting Sockets	319
8579/61	Maintenance Socket	331
86xx		
8621 & 7621	Ex p System	162
90xx		
9001	Single-Channel Safety Barriers	10
9002	Dual-Channel Safety Barriers	13
91xx		
9147	Vibration Transducer Supply Unit	20
9160	Transmitter Supply Unit	22
9162	Transmitter Supply Unit	28
9165	Isolating Repeater	30
9170	Switching Repeater	34
9172	I.S. Relay Module	38
9175	Binary Output	40
9176	Digital Output Loop Powered	44
9180	Resistance Isolator	48
9182	Temperature Transmitter	50
9185/11	Fieldbus Isolating Repeater	149
9185/12	Fieldbus Isolating Repeater	151
9192	HART Multiplexer	56
9193	Supply Module	58
9194	pac-Bus	60
9196	HART Termination Board	64
92xx		
9260	Transmitter Supply Unit	25
9265	Isolating Repeater	32
9270	Switching Repeater	36
9275	Binary Output	42
9276	Digital Output Loop Powered	46
9282	Temperature Transmitter	53
9294	pac-Bus	62
94xx		
9440/22	CPU & Power Module for Zone 1 / Div. 1 - I.S.	70
9441/12	Ethernet CPU Module for Zone 1 / Div. 1	81
9442/35	CPU Module for Zone 2 / Div. 2	74

Type	Type Description	Page
94xx		
9444/12	Ethernet Power Module for Zone 1 / Div. 1	85
9445/35	Power Module for Zone 2 / Div. 2	78
9468/32	Analog Universal Module HART for Zone 1 / Div. 1	88
9468/33	Analog Universal Module HART for Zone 2 / Div. 2	91
9469/35	Universal Module HART Zone 2 / Div. 2 Ex n	94
9470/32	Digital Input Output Module for Zone 1 / Div. 1	98
9470/33	Digital Input Output Module for Zone 2 / Div. 2	101
9471/35	Digital Input Output Module NAMUR	104
9472/35	Digital Input Output Module 24 V	107
9475/32-08	Digital Output Module 8-Channel Version	110
9475/33-08	Digital Output Module 8-Channel Version	113
9478	Digital Output Module Valve for Zone 1 / Div. 1	116
9482/32	Temperature Input Module for Zone 1 / Div. 1	118
9482/33	Temperature Input Module for Zone 2 / Div. 2	121
9491	Termination Board	125
9494	BusRail	127
97xx		
9721	Media Converter	145
9721	Unmanaged Switch	147
9730	HFisolator	139
9730	HFisolator	141
9731	Coax Bushing	143
A2xx		
A2F	Cable Glands Ex e & Ex d & Ex nR & Ex ta	417
A2F100	Cable Glands Ex e & Ex d & Ex nR & Ex ta	419
CMxx		
CMP-781	Breather made of Metal	447
CMP-767	Stopping Plugs with a Truss Head made of Metal	443
CMP-757	Stopping Plugs with a Hexagon Head made of Metal	441
CMP-737D	Adaptors made of Metal	435
CMP-737D	Reducers made of Metal	433
E1xx		
E1FU	Cable Glands Ex e & Ex d & Ex nR & Ex ta	421
ECxx		
EC-941	Full HD IP Pan-Tilt-Zoom Camera	203
EC-910-AFZ-10x	Full HD IP Zoom Camera	202
EC-910-AFZ-3x	Full HD IP Zoom Camera	201
PXxx		
PX2K REX	Cable Glands Ex e & Ex d & Ex nR & Ex ta	427
PXSS2K REX	Cable Glands Ex e & Ex d & Ex nR & Ex ta	429
T3xx		
T3CDS	Cable Glands Ex e & Ex d & Ex nR & Ex ta	425
TExx		
TE1FU	Cable Glands Ex e & Ex d & Ex nR & Ex ta	423

SALES ORGANISATION
EUROPE

Germany

R. STAHL HMI Systems GmbH
Adolf-Grimme-Allee 8
50829 KÖLN-OSSENDORF
T +49 221 768 06 1000
F +49 221 768 06 4100
sales.dehm@r-stahl.com
r-stahl.com

R. STAHL Schaltgeräte GmbH
Niederlassung Süd
Am Bahnhof 30
74638 WALDENBURG
T +49 7942 943 1711
F +49 7942 943 1777
sales.de@r-stahl.com
r-stahl.com

R. STAHL Schaltgeräte GmbH
Niederlassung West
Adolf-Grimme-Allee 8
50829 KÖLN-OSSENDORF
T +49 221 768 06 1400
F +49 7942 943 404 450
sales.de@r-stahl.com
r-stahl.com

R. STAHL Schaltgeräte GmbH
Niederlassung Nord-Ost
Heidenkampsweg 100
20097 HAMBURG
T +49 40 736 054 1100
F +49 7942 943 404 426
sales.de@r-stahl.com
r-stahl.com

Belgium

ELECTROMACH B.V.
Jan Tinbergenstraat 193
7559 SP HENGELO
Netherlands
T +31 74 2472 472
F +31 74 2435 925
sales.nl@r-stahl.com
r-stahl.com/en/nl

Bosnia and Herzegowina

KOLEKTOR SISTEH d.o.o.
Zasavska cesta 95
1231 LJUBLJANA - ČRNUČE
Slovenia
T +386 1 5636 300
F +386 1 7227 930
sisteh@kolektor.com
kolektorsisteh.com

Bulgaria

Bright Engineering Ltd.
BIC-IZOT, floor 6, office 616a
Mladost, 133 Tsarigradsko Shosse bvd.
1784 SOFIA
T +359 52 511 213
F +359 52 501 707
office@bright-eng.com
bright-eng.com

Denmark

MAX FODGAARD A/S
Sydholmen 10
2650 HVIDOVRE
T +45 70 261 700
F +45 70 263 110
max@fodgaard.dk
fodgaard.dk

Estonia

UAB "Automatikos Sistemų Inžinerija"
J. Basanavičiaus g. 9-17
MAŽEIKIAI, LT-89212
Lithuania
T +370 61 245 003
info@ase-lt.lt
ase-lt.lt

Finland

Stig Wahlström Oy
Suokalliontie 9
01740 VANTAA
T +358 9 502 4400
info@swoy.fi

France

R. STAHL France SAS
ZI Courtine - Avignon
30, rue des 4 Gendarmes d'Ouvéa
84000 AVIGNON
T +33 4 32 40 46 46
F +33 4 32 40 46 47
sales.fr@r-stahl.com
r-stahl.com/fr

Greece

NetAP
C.V. TSAKARELOS AND CO L.P.
6 Selefkou
13676 THRAKOMAKEDONES/ATHENS
T +30 2102433383
F +30 2102435073
netap.sales@gmail.com
info@netap.gr
netap.gr

Great Britain

R. STAHL LTD.
Unit 11 Maybrook Business Park
Maybrook Road
MINWORTH, BIRMINGHAM B76 1AL
T +44 121 767 6400
F +44 121 767 6490
sales.uk@r-stahl.com
r-stahl.com/uk

Italy

R. STAHL s.r.l. socio unico
Via Achille Grandi 27
20068 PESCHIERA BORROMEO (MI)
T +39 02 5530 8024
F +39 02 5165 0680
sales.it@r-stahl.com
stahl.it

Croatia

Ex-OPREMA d.o.o.
Fallerovo šetalište 22
10000 ZAGREB
T +385 1 5616 110
F +385 1 5606 185
info@ex-oprema.hr

Latvia

UAB "Automatikos Sistemų Inžinerija"
J. Basanavičiaus g. 9-17
MAŽEIKIAI, LT-89212
Lithuania
T +370 61 245 003
info@ase-lt.lt
ase-lt.lt

Lithuania

UAB "Automatikos Sistemų Inžinerija"
J. Basanavičiaus g. 9-17
MAŽEIKIAI, LT-89212
T +370 61 245 003
info@ase-lt.lt
ase-lt.lt

Macedonia

KEYING d.o.o
Vuka Karadžica 79
23300 KIKINDA
Serbia
T +381 230 439 519
F +381 230 401 790
keying@keying.co.rs

Montenegro

KEYING d.o.o
Vuka Karadžica 79
23300 KIKINDA
Serbia
T +381 230 439 519
F +381 230 401 790
keying@keying.co.rs

Netherlands

ELECTROMACH B.V.
Jan Tinbergenstraat 193
7559 SP HENGELO
T +31 74 2472 472
F +31 74 2435 925
sales.nl@r-stahl.com
r-stahl.com/nl

Norway

R. STAHL Tranberg AS
Office Stavanger
Strandsvingen 6
4032 STAVANGER
T +47 51 57 89 00
F +47 51 57 89 50
sales.no@r-stahl.com
stahl-tranberg.com

R. STAHL Tranberg AS
Office Oslo
Luhrtoppen 2
1470 LØRENSKOG
T +47 24 08 44 10
F +47 24 08 44 11
sales.no@r-stahl.com
stahl-tranberg.com

Poland

Automatic Systems Engineering Sp. z o.o.
ul. Narwicka 6
80-557 GDANSK
T +48 58 520 77 20
F +48 58 346 43 44
stahl@ase.com.pl
ase.com.pl

Portugal

Industrias Stahl, SA – Sucursal em Portugal
Taguspark – Edifício Núcleo Central, Sala 283
2740-122 PORTO SALVO - OEIRAS
T +351 21 414531 5
F +351 21 414531 7
sales.pt@r-stahl.com
stahl.pt

Romania

EXPROOF SOLUTIONS SRL
Sector 1
Calea Grivitei Nr. 228, Bl. 4, Sc. D, Et. 1, Ap. 8,
010763 BUCURESTI
T +40 735 248 878
doina.lacatusu@exproof.ro

Sweden

R. STAHL SVENSKA AB
Skarprättarvägen 1A , Lokal 9
176 77 JÄRFÄLLA
T +46 8 3891 00
F +46 8 3891 98
sales.se@r-stahl.com
rstahl.se

Switzerland

R. STAHL Schaltgeräte GmbH
Vertriebsbüro Süd
Am Bahnhof 30
74638 WALDENBURG
Germany
T +49 7942 943 1711
F +49 7942 943 1777
sales.de@r-stahl.com
r-stahl.com

Serbia

KEYING d.o.o
Vuka Karadžica 79
23300 KIKINDA
T +381 230 439 519
F +381 230 401 790
keying@keying.co.rs

Slovakia

EX-TECHNIK s.r.o.
Na Pečonce 1903/21
710 00 OSTRAVA
Czech Republic
T +420 596 2425 48
technik@ex-technik.cz
ex-technik.cz

Slovenia

KOLEKTOR SISTEH d.o.o.
Zasavska cesta 95
1231 LJUBLJANA - ČRNUČE
T +386 1 5636 300
F +386 1 7227 930
sisteh@kolektor.com
kolektorsisteh.com

Spain

INDUSTRIAS STAHL S.A.
Planta 1ª
Calle de Julián Camarillo, 53
28037 MADRID
T +34 916 615 500
F +34 916 612 783
sales.es@r-stahl.com
stahl.es

Czech Republic

EX-TECHNIK s.r.o.
Na Pečonce 1903/21
710 00 OSTRAVA
T +420 596 2425 48
technik@ex-technik.cz
ex-technik.cz

Turkey

PO EM Elektrik Malzemeleri Pazarlama Dan. Eğitim ve Tic. Ltd. Şti.
Nasuh Akar Mah. 1403 Sokak No: 10/3
06520 CANKAYA, ANKARA
T +90 312 287 88 55
F +90 312 287 88 54
info@po-em.com.tr
po-em.com.tr

Hungary

STAHL Magyarország Kft
Kozák tér 13-16.
1154 BUDAPEST
T +36 1 433 336 0
F +36 1 433 336 1
rstahl@rstahl.hu
rstahl.hu

SALES ORGANISATION
ASIA-PACIFIC

Australia

R. STAHL Australia Pty. Ltd.
848 Old Princess Highway
SUTHERLAND NSW 2232
T +61 2 42 544 777
F +61 2 42 258 276
sales.au@r-stahl.com
stahl.com.au

Brunei

R. STAHL PTE LTD.
Bt Merah Enterprise Centre
10 Jalan Kilang #05-01
SINGAPORE 159410
Singapore
T +65 627 195 95
F +65 637 701 11
sales.sg@r-stahl.com
rstahl.com.sg

China

R. STAHL EX-PROOF (SHANGHAI) CO. LTD.
Unit D, 9th Floor, Bldg. No. 4
889 Yishan Road
SHANGHAI 200233
T +86 21 64850011
F +86 21 64852954
sales.cn@r-stahl.com
rstahl.com.cn

India

R. STAHL (P) LTD.
Plot No. 5, Malrosapuram Road
Sengundram Indl Area, Singaperumal Koil
KANCHEEPURAM DT., TAMIL NADU - 603 204
T +91 44 30 600 600
F +91 44 30 600 700
sales.in@r-stahl.com
r-stahl.com/in

Indonesia

R. STAHL PTE LTD.
Bt Merah Enterprise Centre
10 Jalan Kilang #05-01
SINGAPORE 159410
Singapore
T +65 627 195 95
F +65 637 701 11
sales.sg@r-stahl.com
rstahl.com.sg

Japan

R. STAHL PTE LTD (Japan Branch)
32F Shinjuku Nomura Building
1-26-2 Nishi-Shinjuku, Shinjuku-ku
TOKYO 163-0532
T +81 3 5322 2064
F +81 3 5322 2817
sales.jp@r-stahl.com
stahl.jp

Malaysia

R. STAHL Engineering & Manufacturing SDN. BHD.
Level 7, Oasis Wing, Brunsfield Oasis Tower 3,
No. 2, Jalan PJU 1A/7A, Oasis Square, Oasis Damansara,
PETALING JAYA 47302 SELANGOR,
T +603-7848 5851/5852
F +603-7848 5818
sales.my@r-stahl.com
rstahl.com.sg

New Zealand

Electropar PLP New Zealand
P O Box 58623
Botany, Manukau
AUCKLAND, 2163
T +64 927 420 00
F +64 927 420 01
philip.watson@electropar.co.nz
electropar.co.nz

Pakistan

MAPLE PAKISTAN (p.v.t) LTD
FL-42, Block B
Gulshan-e-Jamal, Rashid Minhas Road
KARACHI
T +92 21 34573167
pervez@maple.com.pk
maplepharma.com

Papua New Guinea

R. STAHL Australia Pty. Ltd.
848 Old Princess Highway
SUTHERLAND NSW 2232
Australia
T +61 2 42 544 777
F +61 2 42 258 276
sales.au@r-stahl.com
stahl.com.au

Philippines

R. STAHL PTE LTD.
Bt Merah Enterprise Centre
10 Jalan Kilang #05-01
SINGAPORE 159410
Singapore
T +65 627 195 95
F +65 637 701 11
sales.sg@r-stahl.com
rstahl.com.sg

Singapore

R. STAHL PTE LTD.
Bt Merah Enterprise Centre
10 Jalan Kilang #05-01
SINGAPORE 159410
T +65 627 195 95
F +65 637 701 11
sales.sg@r-stahl.com
rstahl.com.sg

South Korea

R. STAHL CO LTD
Suite 1107, Kolon Digital Tower 1
4 gil 25 Sungsoo-il-ro,
SUNGDONG-GU, SEOUL, KOREA 04381
T +82 2 4708877
F +82 2 4718285
sales.kr@r-stahl.com
stahl.co.kr

Taiwan

Wan Jiun Technology Co., Ltd.
11F., No.896, Jingguo Rd.
Luzhu Dist.
TAOYUAN CITY 33858
T +886 3 3161585
F +886 3 3160823
wanjiun@ex.com.tw
ex.com.tw

Thailand

R. STAHL PTE LTD.
Bt Merah Enterprise Centre
10 Jalan Kilang #05-01
SINGAPORE 159410
Singapore
T +65 627 195 95
F +65 637 701 11
sales.sg@r-stahl.com
rstahl.com.sg

Vietnam

R. STAHL PTE LTD.
Bt Merah Enterprise Centre
10 Jalan Kilang #05-01
SINGAPORE 159410
Singapore
T +65 627 195 95
F +65 637 701 11
sales.sg@r-stahl.com
rstahl.com.sg

Egypt

EAGLE CO. (S.A.E.)
23, Fawzy Moaaz Str.
ALEXANDRIA 432
T +20 3 42570 11
F +20 3 42570 61
eagle.co@tedata.net.eg

Industrial Technology Services
4 Magles El-madina st., Msaken Hegazy
QESM AWAL SHOUBRA EL-KHEMA,
EL-QALYOUBIA
T +20 1 288 179 196
F +20 2 444 765 29
info@intecs-egypt.com
intecs-egypt.com

Kenya

R. STAHL South Africa (Pty) Ltd.
61 Ronald Avenue, Linbro Park
2065 JOHANNESBURG
Republic of South Africa
T +27 11 608 3120
F +27 86 559 2442
sales.za@r-stahl.com
r-stahl.com

Namibia

R. STAHL South Africa (Pty) Ltd.
61 Ronald Avenue, Linbro Park
2065 JOHANNESBURG
Republic of South Africa
T +27 11 608 3120
F +27 86 559 2442
sales.za@r-stahl.com
r-stahl.com

Nigeria

IESL International Energy Services Limited
94, Awolowo Road, Ikoyi
LAGOS
Nigeria
T +234 1 4615636, 4630183
F +234 1 463 0936
energyhouse@ieslglobal.com
ieslglobal.com

Republic of South Africa

R. STAHL South Africa (Pty) Ltd.
61 Ronald Avenue, Linbro Park
2065 JOHANNESBURG
T +27 11 608 3120
F +27 86 559 2442
sales.za@r-stahl.com
r-stahl.com

Zambia

R. STAHL South Africa (Pty) Ltd.
61 Ronald Avenue, Linbro Park
2065 JOHANNESBURG
Republic of South Africa
T +27 11 608 3120
F +27 86 559 2442
sales.za@r-stahl.com
r-stahl.com

SALES ORGANISATION
MIDDLE EAST

Bahrain

Al Bait
P. O. Box 613
MANAMA
T +973 17534354
F +973 17535422
albait@batelco.com.bh

Kuwait

Kuwait Maritime & Mercantile Co. K.S.C.
P. O. Box 78
SAFAT 13001
T +965 22434752
F +965 22441486
maneendra.asthan@iss-shipping.com
iss-shipping.com

Oman

Global Pavilion LLC
P. O. Box 845, Azaiba, PC 130
MUSCAT
T +968 24551846 / 24551847
F +968 24619050
electrical@gploman.com
gploman.com

Qatar

Petroleum Technology Co. W.L.L.
P. O. Box 16069, 8th Floor, Toyota Tower
DOHA
T +974 44419 603
F +974 44419 604
biswadeep@petrotec.com.qa
latha@petrotec.com.qa
petrotec.com.qa

Saudi Arabia

Arabian Technical Trading Est. (ATTEST)
P. O. Box 8415
DAMMAM 31482
T +966 3 8341924
F +966 3 8342071
sales2@attest.com.sa
attest.com.sa

UAE

Distribution NOW FZE
Jebel Ali Free Zone South
P. O. Box 263176
DUBAI
T +971 4 8891200
F +971 4 8851118
George.Mazarello@dnow.com
distributionnow.com

Falcor Engineering & Contracting Services
P. O. Box 48576
ABU DHABI
T +971 2 6342525
F +971 2 6348562
info@falcor-eng.com
falcor-eng.com

R. STAHL Gulf FZCO
6WB Building, Office 832, Dubai Airport Free Zone (DAFZA)
P. O. Box 371697
DUBAI
T +971 4 8066 400
F +971 4 8834 685
sales.ae@r-stahl.com
r-stahl.com/ae

Solas Marine Services Group
(Tranberg Products)
P. O. Box 25445
DUBAI
T +971 4 2791300
F +971 4 2791200
info@solasmarine.com
solasmarine.com

Armenia

PETRO ARIKE TRADING COMPANY
Unit 318, 26/1 Erebuni Plaza
Vazgen Sargsyan St.
0010 YEREVAN
T +374 11 703 404, 705 404
F +374 11 704 404
a.amosyan@petroarike.com

Azerbaijan

ATENAU LTD.
27, Heydar Aliyev avenue,
KHIRDALAN AZ0100
T +994 12 346 66 22
F +994 12 447 08 89
office@atenau-ltd.com
atenau-ltd.com

Georgia

Insta LLC
8 Zakariadze Str.
0177 TBILISI
T +995 32 220 20 20 ext. 303
F +995 32 220 20 22
sales@insta.ge
insta.ge

Kazakhstan

R. STAHL LLP
Terenozek St., 26
060000, ATYRAU
T +7 777 739 0086
asylbek.umbetaliyev@r-stahl.com

Russia

"ZAVOD GORELTEX" LLC
Novosaratovka township area, liter A,
Vsevolozhsky District
193149 LENINGRAD REGION
T +7 800 100 1004
F +7 812 448 9090
mail@exd.ru
exd.ru

Turkmenistan

Asia Caspian Engineering Co.
10 yyl Abadancylyk Ave., 137,
744028 ASHGABAT
T +993 124 813 16
nkapoor@acecogrp.com
acecogrp.net

Ukraine

Private Joint Stock Company "DEG"
14 office
3, Peschanaya str.
69089 ZAPOROZHYE
T +380 61 228 74 47 M +380 50 347 96 24
deg@deg.com.ua
deg.com.ua

Belarus

"ZAVOD GORELTEX" LLC
st. Shafarnyanskaya, 11, pom. 66
220125 MINSK
T +375 17 286 3798
F +375 17 286 3799
mail@goreltex.by

SALES ORGANISATION
AMERICA

USA

R. STAHL, Inc.
13259 N. Promenade Blvd
STAFFORD, TX 77477
T +1 800 782 4357
sales.us@r-stahl.com
rstahl.com

Canada

R. STAHL LTD.
7003-56th Avenue
EDMONTON, ALBERTA T6B 3L2
T +1 877 416 4302
F +1 780 489 5525
sales.ca@r-stahl.com
rstahl.com

Argentina

CPI – CONTROL PARA LA INDUSTRIA
Bauness 2660
C1431DOF
CIUDAD AUTÓNOMA DE BUENOS AIRES ,
BUENOS AIRES
T +54 11 4890 6100
cpi@cpi.com.ar
cpi.com.ar

Brazil

steute do Brasil
Avenida Avelino Capellato 270
Santa Claudina
13284-480 VINHEDO-SP
T +55 19 3836 2414
F +55 19 3836 2404
vendas@steute.com.br
steute.com.br

Chile

INGENIERIA DESIMAT LTDA.
Av. Puerto Vespucio 9670
9061072 PUDAHUEL SANTIAGO
T +56 2 2585 12 20
ventaschile@desimat.cl
desimat.com

Columbia

Colsein Ltda.
Parque Industrial Gran Sabana, Edificio 32
TOCANCIPA, CUN 251017
T +57 1 519 0967
info@colsein.com.co
colsein.com.co

Cuba

Fondon Redes y Fluidos, S.L. (División Cuba)
Miramar Playa
FIHAV 2015 –Pabellón Nro. 8
LA HABANA
jmuniz@fondon.co.cu

Mexico

R. STAHL, Inc.
13259 N. Promenade Blvd
STAFFORD, TX 77477
USA
T +1 800 782 4357
sales@rstahl.com
rstahl.com

Panama

Syncflow Corporation, S.A.
Edif. Colores de Bella Vista, piso 16, oficina F
Calle 43 Este
CIUDAD DE PANAMÁ
T +507 381 3740
sales@syncflow.com.pa
syncflow.com.pa

Paraguay

INCOEL S.R.L
Av. José F. Bogado, 1455
CP 1355
ASSUNCIÓN
T +59 21 30 11 01 / 30 11 02
wrojas@incoel.com.py
incoel.com.py

Peru

DIPROSOL PERÚ S.A.C.
Av. Velasco Astete 2371
Santiago de Surco
LIMA
T +51 1 275 2776
ventas@diprosol.com.pe
diprosol.com.pe

Trinidad & Tobago

Emerson Technologies Limited
#14 Olympia Avenue, Millenium Park
TRINCITY
T +1 868 280 4562
info@emerson-technologies.com
emerson-technologies.com

Uruguay

Techingenium
Av. Dr. Francisco Soca, 1531
MONTEVIDEO - 11300
T +598 2707 48 01
info@techingenium.com.uy
techingenium.com.uy